YAMAHA

MOTIF XF6
MOTIF XF7
MOTIF XF8

MUSIC PRODUCTION SYNTHESIZER

Data List

Contents

Voice List 2
Drum Voice List 12
    Drum Voice Name List 12
    Drum Kit Assign List 13
Waveform List 32
Arpeggio Type List 45
Effect Type List 93
Effect Parameter List 95
Effect Preset List 105
Effect Data Assign Table 108
Control List 116
Performance List 117
Master Assign List 121
Mixing Template List 122
MIDI Data Format 123
MIDI Data Table 127
MIDI Implementation Chart 147
Remote Control Assignments 149
GNU GENERAL PUBLIC LICENSE 158
GNU LESSER GENERAL PUBLIC LICENSE 160

EN

Voice List

PRE 1 (MSB=63, LSB=0)

Number		Voice Name	Category 1		Category 2		Element
			Main	Sub	Main	Sub	
1	A01	Full Concert Grand	Piano	APno	--	--	2
2	A02	Rock Grand Piano	Piano	Modrn	--	--	2
3	A03	Mellow Grand Piano	Piano	APno	--	--	2
4	A04	Glasgow	Piano	APno	--	--	4
5	A05	Romantic Piano	Piano	APno	--	--	2
6	A06	Aggressive Grand	Piano	Modrn	--	--	3
7	A07	Tacky	Piano	Modrn	--	--	2
8	A08	House Piano	Piano	Modrn	--	--	3
9	A09	Old and Squashed	Piano	Vintg	--	--	1
10	A10	Ballad Key	Piano	Layer	Keys	EP	3
11	A11	80s Layer	Piano	Layer	Keys	EP	4
12	A12	Ballad Stack	Piano	Layer	Keys	EP	4
13	A13	Piano Back	Piano	Layer	--	--	4
14	A14	Piano & Strings	Piano	Layer	--	--	4
15	A15	Piano & Ooh Choir	Piano	Layer	--	--	4
16	A16	Monaural Grand MW	Piano	APno	--	--	1
17	B01	Old Blues	Piano	Vintg	--	--	2
18	B02	1968	Piano	Vintg	--	--	2
19	B03	CP 1979	Piano	Vintg	--	--	1
20	B04	CP70 Chorus	Piano	Vintg	--	--	1
21	B05	Journey	Piano	Vintg	--	--	1
22	B06	Vintage'74	Keys	EP	--	--	1
23	B07	R&B Soft	Keys	EP	--	--	1
24	B08	Early 70's	Keys	EP	--	--	2
25	B09	Soft Case	Keys	EP	--	--	1
26	B10	Crunchy Comp	Keys	EP	--	--	1
27	B11	Vintage Case	Keys	EP	--	--	1
28	B12	Hard Vintage	Keys	EP	--	--	1
29	B13	Sweetness MW+AS2	Keys	EP	--	--	1
30	B14	Phaser Vintage	Keys	EP	--	--	1
31	B15	Vintage Phase	Keys	EP	--	--	1
32	B16	Early Fusion	Keys	EP	--	--	2
33	C01	Neo Soul MW+AS1	Keys	EP	--	--	1
34	C02	1983 MW+AS1	Keys	EP	--	--	2
35	C03	Contempo	Keys	EP	--	--	1
36	C04	Clicky Dyno MW+AS2	Keys	EP	--	--	1
37	C05	Dyno Straight MW+AS2	Keys	EP	--	--	2
38	C06	Dyno Chorus MW+AS2	Keys	EP	--	--	1
39	C07	80s Boosted	Keys	EP	--	--	2
40	C08	Chorus Hard	Keys	EP	--	--	1
41	C09	Max Tine	Keys	EP	--	--	3
42	C10	Bell Chorus	Keys	FM	--	--	2
43	C11	Drive EP AS1	Keys	EP	--	--	1
44	C12	Vinyl EP AS1	Keys	EP	S.EFX	SciFi	2
45	C13	Natural Wurli	Keys	EP	--	--	2
46	C14	Wurli EP Bright	Keys	EP	--	--	1
47	C15	Wurli Distortion AS1	Keys	EP	--	--	2
48	C16	Phaze Wurli	Keys	EP	--	--	1
49	D01	DX Legend	Keys	FM	--	--	2
50	D02	Bell DX	Keys	FM	--	--	3
51	D03	DX Woody	Keys	FM	--	--	2
52	D04	Full Tine	Keys	FM	--	--	2
53	D05	DX Mellow	Keys	FM	--	--	2
54	D06	DX Crisp	Keys	FM	--	--	2
55	D07	DX Celesta EP	Keys	FM	--	--	2
56	D08	DX Pluck EP	Keys	FM	--	--	2
57	D09	DX-7 II AS1	Keys	FM	--	--	3
58	D10	GS Tines AF1&2	Keys	FM	--	--	2
59	D11	Galaxy DX	Keys	FM	--	--	4
60	D12	TX816 Bell Piano	Keys	FM	CPerc	Bell	4
61	D13	Marimba DX	Keys	FM	CPerc	Malet	4
62	D14	DX5-Zero	Keys	FM	SyCmp	Digtl	4
63	D15	Hybrid EP	Keys	EP	--	--	3
64	D16	Mixed Up	Keys	EP	--	--	3

Number		Voice Name	Category 1		Category 2		Element
			Main	Sub	Main	Sub	
65	E01	Dyno Wurli	Keys	EP	--	--	2
66	E02	Analog Piano	Keys	Synth	--	--	2
67	E03	AhrAml	Keys	Synth	--	--	2
68	E04	Electro Piano	Keys	EP	SyCmp	Analg	2
69	E05	Transistor Piano	Keys	Synth	Piano	--	2
70	E06	EP Pad	Keys	EP	Pads	Warm	3
71	E07	DX Pad	Keys	EP	Pads	Warm	4
72	E08	Dyno Choir	Keys	EP	Pads	Choir	3
73	E09	Vintage Clavi	Keys	Clavi	--	--	2
74	E10	Super Clavi	Keys	Clavi	--	--	1
75	E11	Stereo Clavi	Keys	Clavi	--	--	2
76	E12	Hollow Clavi	Keys	Clavi	--	--	1
77	E13	Nu Phasing	Keys	Clavi	--	--	2
78	E14	Touch Clavi	Keys	Clavi	--	--	3
79	E15	Pedal Wah Clavi FC2	Keys	Clavi	--	--	3
80	E16	Pulse Clavi	Keys	Clavi	SyCmp	Analg	1
81	F01	Guitarpsichord	Keys	Clavi	--	--	3
82	F02	Hipsichord	Keys	Clavi	--	--	3
83	F03	16 + 8 + 5&1/3	Organ	TnWhl	--	--	4
84	F04	Jazz 2nd Perc + C3	Organ	TnWhl	--	--	5
85	F05	First 3 w/Perc	Organ	TnWhl	--	--	4
86	F06	Slow Jam	Organ	TnWhl	--	--	3
87	F07	Cool Cat	Organ	TnWhl	--	--	4
88	F08	Jazzy 1	Organ	TnWhl	--	--	4
89	F09	Jazzy 2	Organ	TnWhl	--	--	4
90	F10	Jazzy Chorus	Organ	TnWhl	--	--	4
91	F11	On Road AS1	Organ	TnWhl	--	--	4
92	F12	Progressy	Organ	TnWhl	--	--	4
93	F13	Rocky AS2	Organ	TnWhl	--	--	4
94	F14	Crunchy AS2	Organ	TnWhl	--	--	4
95	F15	1972 AS1	Organ	Combo	--	--	8
96	F16	Glassy AF1	Organ	TnWhl	--	--	4
97	G01	Clean	Organ	TnWhl	--	--	2
98	G02	All Bars Perc AF1&2	Organ	TnWhl	--	--	8
99	G03	Rotor Vibrato	Organ	TnWhl	--	--	8
100	G04	Vib Chorus AF1	Organ	TnWhl	--	--	1
101	G05	Soulemn	Organ	TnWhl	--	--	3
102	G06	Mellow AS2	Organ	TnWhl	--	--	2
103	G07	Fully	Organ	TnWhl	--	--	4
104	G08	FullDraw/CVibrato	Organ	TnWhl	--	--	2
105	G09	Even Out	Organ	TnWhl	--	--	4
106	G10	Harmonic Hole	Organ	TnWhl	--	--	5
107	G11	A Few Wheels	Organ	TnWhl	--	--	4
108	G12	Left Manual	Organ	TnWhl	--	--	4
109	G13	Draw Control	Organ	TnWhl	--	--	4
110	G14	Stop Rotar	Organ	TnWhl	--	--	5
111	G15	Clean Noise	Organ	TnWhl	--	--	3
112	G16	Walking Bass	Organ	TnWhl	--	--	3
113	H01	Greasy	Organ	TnWhl	--	--	4
114	H02	Swishie	Organ	TnWhl	--	--	3
115	H03	Solo Percussion AF2	Organ	TnWhl	--	--	2
116	H04	PercussionVibratoAF2	Organ	TnWhl	--	--	2
117	H05	Tiny Combo Bars 1	Organ	Combo	--	--	4
118	H06	Tiny Combo Bars 2	Organ	Combo	--	--	3
119	H07	Panther	Organ	Combo	--	--	3
120	H08	1967 Keys	Organ	Combo	Keys	EP	1
121	H09	YD-45C	Organ	Combo	--	--	3
122	H10	Diamond Head	Organ	Synth	SyCmp	Fade	2
123	H11	Early Bird	Organ	TnWhl	--	--	4
124	H12	Moet	Organ	Synth	SyCmp	Digtl	2
125	H13	Bollinger	Organ	Synth	SyCmp	Digtl	2
126	H14	Vinyl Organ	Organ	Synth	--	--	2
127	H15	Alternator	Organ	TnWhl	M.EFX	--	3
128	H16	Flying Rhythm Bars	Organ	Synth	M.EFX	Move	6

PRE 2 (MSB=63, LSB=1)

Number		Voice Name	Category 1		Category 2		Element
			Main	Sub	Main	Sub	
1	A01	Roundabout	Organ	Arp	M.EFX	Arp	1
2	A02	Tradi	Organ	TnWhl	--	--	4
3	A03	Petit	Organ	TnWhl	--	--	1
4	A04	Fluty	Organ	TnWhl	--	--	1
5	A05	Fluty Pipe	Organ	Pipe	--	--	3
6	A06	St. Peter	Organ	Pipe	--	--	1
7	A07	St. Paul AF1&2	Organ	Pipe	--	--	3
8	A08	Impromptu	Organ	Pipe	--	--	4
9	A09	Mixture	Organ	Pipe	--	--	3
10	A10	Reed Split	Organ	Pipe	--	--	4
11	A11	Medieval MW	Organ	Pipe	--	--	4
12	A12	Breath Pipe	Organ	Pipe	--	--	4
13	A13	Reedy Pipe	Organ	Pipe	--	--	4
14	A14	Sunday	Organ	Pipe	--	--	4
15	A15	Accordions AF1&2	Organ	Pipe	--	--	1
16	A16	Soft Marimba	CPerc	Malet	--	--	1
17	B01	Vibes Bow MW	CPerc	Malet	--	--	3
18	B02	Twinkle	CPerc	Bell	--	--	4
19	B03	Stick Bell	CPerc	Bell	--	--	3
20	B04	Ice Bells	CPerc	Bell	--	--	4
21	B05	Bell Ice	CPerc	Bell	--	--	3
22	B06	Stack Bell	CPerc	SynBl	--	--	4
23	B07	J-Pop	CPerc	Bell	--	--	3
24	B08	Chorus Bell	CPerc	Bell	--	--	2
25	B09	Handbell	CPerc	Bell	--	--	2
26	B10	Bell Chiff	CPerc	SynBl	--	--	2
27	B11	Sako Bell	CPerc	SynBl	--	--	2
28	B12	Nice Bell	CPerc	SynBl	SyCmp	Digtl	4
29	B13	Noisy Bell	CPerc	SynBl	--	--	3
30	B14	Pop Bells & Pad MW	CPerc	Bell	Pads	Brite	4
31	B15	Going To Heaven	CPerc	Arp	--	--	3
32	B16	Digibox	CPerc	SynBl	SyCmp	Digtl	3
33	C01	Nibelungen	CPerc	Bell	M.EFX	--	2
34	C02	Wood Bell	CPerc	Bell	--	--	4
35	C03	Marimbell	CPerc	SynBl	--	--	4
36	C04	Synth Steel Drum	CPerc	PDrum	--	--	3
37	C05	Gamelan	CPerc	Bell	Ethnc	Struk	2
38	C06	Ethnic Dream	CPerc	Malet	M.EFX	--	2
39	C07	Mystic Bowl	CPerc	Bell	Ethnc	Struk	2
40	C08	Mbira	Ethnc	Pluk	--	--	4
41	C09	Glass Mbira	CPerc	PDrum	Ethnc	Pluk	4
42	C10	Island Bell	CPerc	SynBl	--	--	3
43	C11	Tibetan	CPerc	Bell	Ethnc	Struk	3
44	C12	Rimba Bells	CPerc	SynBl	--	--	3
45	C13	Lost in Asia	CPerc	Bell	--	--	4
46	C14	Coconuts Random	CPerc	Arp	M.EFX	--	1
47	C15	Kodo	CPerc	PDrum	--	--	1
48	C16	Timpani/Bell/Glocken	CPerc	Bell	CPerc	PDrum	2
49	D01	Orc Percussion	CPerc	Bell	Dr/Pc	Perc	4
50	D02	Classical AF1&2	Guitar	A.Gtr	--	--	2
51	D03	High Tension AF1&2	Guitar	A.Gtr	--	--	2
52	D04	Sao Paulo	Guitar	A.Gtr	--	--	2
53	D05	Barcelona	Guitar	A.Gtr	--	--	4
54	D06	Nylon Slide Vel	Guitar	A.Gtr	--	--	4
55	D07	Nylon Harmonics Vel	Guitar	A.Gtr	--	--	4
56	D08	Classical 12 Strings	Guitar	A.Gtr	--	--	4
57	D09	Hip-Hop Nylon Guitar	Guitar	A.Gtr	--	--	2
58	D10	Steel String AF1&2	Guitar	A.Gtr	--	--	2
59	D11	Old Strings AF1&2	Guitar	A.Gtr	--	--	2
60	D12	Steel Slide Vel	Guitar	A.Gtr	--	--	4
61	D13	Mute & Slide Vel	Guitar	A.Gtr	--	--	2
62	D14	Steel Harmonics Vel	Guitar	A.Gtr	--	--	4
63	D15	Hip-Hop Steel Guitar	Guitar	A.Gtr	--	--	2
64	D16	Hi Strings	Guitar	A.Gtr	--	--	2

Number		Voice Name	Category 1		Category 2		Element
			Main	Sub	Main	Sub	
65	E01	Two Acoustics	Guitar	A.Gtr	--	--	4
66	E02	2 Steel Strings	Guitar	A.Gtr	--	--	4
67	E03	Big 12 Strings	Guitar	A.Gtr	--	--	4
68	E04	Airy 12 AF1&2	Guitar	A.Gtr	--	--	4
69	E05	Wide 12 strings AF1	Guitar	A.Gtr	--	--	4
70	E06	12Strings Mono	Guitar	A.Gtr	--	--	2
71	E07	Clean El & Ac 1	Guitar	E.Cln	Guitar	A.Gtr	3
72	E08	Clean El & Ac 2	Guitar	E.Cln	Guitar	A.Gtr	3
73	E09	Clean El & Ac 3	Guitar	E.Cln	Guitar	A.Gtr	3
74	E10	Strange 12	Guitar	E.Cln	Guitar	A.Gtr	4
75	E11	Jazzy Pick	Guitar	E.Cln	--	--	2
76	E12	Melodic Jazz	Guitar	E.Cln	--	--	2
77	E13	Fat Oil Jazz AF1&2	Guitar	E.Cln	--	--	1
78	E14	Touch Wah AF1	Guitar	E.Cln	--	--	1
79	E15	Baby AF1	Guitar	E.Cln	--	--	3
80	E16	Good Night	Guitar	E.Cln	--	--	1
81	F01	Dynamic Clean AF1&2	Guitar	E.Cln	--	--	1
82	F02	Single Coil Chorus	Guitar	E.Cln	--	--	2
83	F03	Distant	Guitar	E.Cln	--	--	4
84	F04	Some Hair	Guitar	E.Dst	--	--	3
85	F05	Clean Slide Vel	Guitar	E.Cln	--	--	2
86	F06	Hit It Hard AS2	Guitar	E.Cln	--	--	2
87	F07	Paddy Clean	Guitar	E.Cln	--	--	2
88	F08	Bluesy Clean Legato	Guitar	E.Cln	--	--	2
89	F09	Dual Coil '65	Guitar	E.Dst	--	--	2
90	F10	Dual Coil Amp AS1	Guitar	E.Cln	--	--	1
91	F11	Roto Guitar MW	Guitar	E.Cln	--	--	2
92	F12	Dual Coil Slide Vel	Guitar	E.Cln	--	--	2
93	F13	Dual Coil Slap Vel	Guitar	E.Cln	--	--	2
94	F14	Dual Coil 80s Clean	Guitar	E.Cln	--	--	2
95	F15	Dual Coil Rotary	Guitar	E.Cln	--	--	2
96	F16	Electric 12Strings	Guitar	E.Cln	--	--	3
97	G01	Rotator AF1&2	Guitar	E.Dst	--	--	2
98	G02	Middy Tremolo	Guitar	E.Dst	--	--	3
99	G03	Retro Flanger	Guitar	E.Cln	--	--	2
100	G04	Vintage Strum	Guitar	E.Cln	--	--	3
101	G05	Spanky	Guitar	E.Dst	--	--	2
102	G06	Rockabilly	Guitar	E.Dst	--	--	2
103	G07	2 Electrics AF1&2	Guitar	E.Cln	--	--	2
104	G08	Light Blues AF1&2	Guitar	E.Dst	--	--	1
105	G09	Dual Coil Semi Clean	Guitar	E.Cln	--	--	1
106	G10	Chorus Dist AF1&2	Guitar	E.Dst	--	--	2
107	G11	Tex Boogie	Guitar	E.Dst	--	--	3
108	G12	59 Combo AF1&2	Guitar	E.Dst	--	--	2
109	G13	Alternative Rocker	Guitar	E.Dst	--	--	2
110	G14	Overdrive Mute&Harmo	Guitar	E.Dst	--	--	1
111	G15	Crunched Up 376	Guitar	E.Dst	--	--	3
112	G16	Dynamic Amp AS1	Guitar	E.Dst	--	--	3
113	H01	Chuggin' Guitar	Guitar	E.Dst	--	--	2
114	H02	Chugga	Guitar	E.Dst	--	--	1
115	H03	Small Amp AS1	Guitar	E.Dst	--	--	2
116	H04	Metal Mute AS2	Guitar	E.Dst	--	--	2
117	H05	DistortionMute&Harmo	Guitar	E.Dst	--	--	1
118	H06	Cool Drive AS1	Guitar	E.Dst	--	--	3
119	H07	Hard Drive AS1&2	Guitar	E.Dst	--	--	4
120	H08	Hard Ramp AS1&2	Guitar	E.Dst	--	--	3
121	H09	Heavy Drive	Guitar	E.Dst	--	--	2
122	H10	No.1 GTR AS1&2	Guitar	E.Dst	--	--	2
123	H11	Snake Finger	Guitar	E.Dst	--	--	2
124	H12	Dual Coil Blue Lead	Guitar	E.Dst	--	--	2
125	H13	Over The Top	Guitar	E.Dst	--	--	2
126	H14	Voodooman	Guitar	E.Dst	--	--	2
127	H15	Killer Whammy	Guitar	E.Dst	--	--	3
128	H16	Latin Lover	Guitar	E.Dst	--	--	1

PRE 3 (MSB=63, LSB=2)

Number		Voice Name	Category 1		Category 2		Element
			Main	Sub	Main	Sub	
1	A01	Oct FuzzPedalWah FC2	Guitar	E.Dst	--	--	3
2	A02	DualCoilLeadWah FC2	Guitar	E.Dst	--	--	2
3	A03	DualCoilHarmonicsVel	Guitar	E.Dst	--	--	3
4	A04	Crunchy Guitar	Guitar	E.Dst	--	--	3
5	A05	Beater AS2	Guitar	E.Dst	--	--	2
6	A06	HIP Mute	Guitar	E.Cln	--	--	2
7	A07	Pedal Steel	Guitar	E.Cln	--	--	2
8	A08	DualCoil80sCleanMute	Guitar	E.Cln	--	--	1
9	A09	Mid Drive (2handGtr)	Guitar	E.Dst	--	--	3
10	A10	HardRocker(2handGtr)	Guitar	E.Dst	--	--	3
11	A11	ToughTube (2handGtr)	Guitar	E.Dst	--	--	1
12	A12	DriveWah (2handGtr)	Guitar	E.Dst	--	--	4
13	A13	Resonator Guitar	Guitar	A.Gtr	Ethnc	Pluk	4
14	A14	Velo Growl	Bass	ABass	--	--	2
15	A15	GrooveAcoustic AF1&2	Bass	ABass	--	--	1
16	A16	Upright	Bass	ABass	--	--	2
17	B01	Prec Flat Wound	Bass	EBass	--	--	2
18	B02	Round Wound	Bass	EBass	--	--	2
19	B03	Active P	Bass	EBass	--	--	2
20	B04	Mid Range Finger	Bass	EBass	--	--	2
21	B05	Active TRB	Bass	EBass	--	--	1
22	B06	Passive BB AF1&2	Bass	EBass	--	--	1
23	B07	Vintage JB AF1&2	Bass	EBass	--	--	1
24	B08	StraightFinger AF1&2	Bass	EBass	--	--	1
25	B09	JB Flat Wound AF1&2	Bass	EBass	--	--	1
26	B10	Finger PBs AF1	Bass	EBass	--	--	1
27	B11	Prec Amped AF1	Bass	EBass	--	--	2
28	B12	Finger Bass Amp AF1	Bass	EBass	--	--	2
29	B13	Fret Buzzy	Bass	EBass	--	--	2
30	B14	Small Cabinet	Bass	EBass	--	--	1
31	B15	Simple Pick	Bass	EBass	--	--	1
32	B16	Pick Open	Bass	EBass	--	--	3
33	C01	Pick Mute	Bass	EBass	--	--	2
34	C02	Pick Pull	Bass	EBass	--	--	2
35	C03	Straight Pick AF1&2	Bass	EBass	--	--	2
36	C04	Velo Bass	Bass	EBass	--	--	1
37	C05	Slap Switch	Bass	EBass	--	--	2
38	C06	Fretless Dry	Bass	EBass	--	--	2
39	C07	Fretless Solo	Bass	EBass	--	--	2
40	C08	PBassFingerDist AF1	Bass	EBass	--	--	2
41	C09	Fuzz Bass AF1AS1	Bass	EBass	--	--	3
42	C10	Gnarly Bass	Bass	EBass	--	--	1
43	C11	BaCement	Bass	EBass	--	--	1
44	C12	Dist Tama Bass	Bass	EBass	--	--	3
45	C13	5th Fuzz Bass	Bass	EBass	--	--	3
46	C14	Chili Bass	Bass	EBass	--	--	3
47	C15	Big Cabinet	Bass	EBass	--	--	2
48	C16	Hybrid Bass 1	Bass	EBass	--	--	3
49	D01	Hybrid Bass 2	Bass	EBass	--	--	3
50	D02	3 VCOs	Bass	SynBs	--	--	4
51	D03	Brain Bass AF1&2	Bass	SynBs	--	--	3
52	D04	Lo Boy AF1&2 AS1&2	Bass	SynBs	--	--	3
53	D05	Dark Bass	Bass	SynBs	--	--	1
54	D06	RnBass RB	Bass	SynBs	--	--	2
55	D07	Fundamental	Bass	SynBs	--	--	2
56	D08	Fat Sine Resonance	Bass	SynBs	--	--	3
57	D09	Moon Bass	Bass	SynBs	--	--	1
58	D10	More Fatty	Bass	SynBs	--	--	4
59	D11	Chill Out Bass AF1	Bass	SynBs	--	--	1
60	D12	Growler	Bass	SynBs	--	--	2
61	D13	Smacked	Bass	SynBs	--	--	2
62	D14	booooooooom	Bass	SynBs	--	--	2
63	D15	Biting	Bass	SynBs	--	--	2
64	D16	Boogie A LegatoAF1RB	Bass	SynBs	--	--	3

Number		Voice Name	Category 1		Category 2		Element
			Main	Sub	Main	Sub	
65	E01	Uni Punch	Bass	SynBs	--	--	2
66	E02	Noise Bass	Bass	SynBs	--	--	1
67	E03	Single Oscillator	Bass	SynBs	--	--	1
68	E04	Unison	Bass	SynBs	--	--	3
69	E05	Long Spit AF2	Bass	SynBs	--	--	2
70	E06	Big Bass	Bass	SynBs	--	--	3
71	E07	Bass&Comp!	Bass	SynBs	--	--	4
72	E08	Rave Blade	Bass	SynBs	--	--	2
73	E09	Plastic Bass	Bass	SynBs	--	--	3
74	E10	Funky Resonance RB	Bass	SynBs	--	--	3
75	E11	Phat Three	Bass	SynBs	--	--	3
76	E12	Needle Bass	Bass	SynBs	--	--	3
77	E13	Acidd	Bass	SynBs	--	--	3
78	E14	Boom Bass AF1	Bass	SynBs	--	--	2
79	E15	West Coast	Bass	SynBs	--	--	2
80	E16	Wazzo	Bass	SynBs	--	--	2
81	F01	Fast PWM Bass	Bass	SynBs	--	--	2
82	F02	Bass Pedal	Bass	SynBs	--	--	2
83	F03	Oxide	Bass	SynBs	--	--	2
84	F04	Bowngo	Bass	SynBs	--	--	1
85	F05	Wide Synth Bass	Bass	SynBs	--	--	2
86	F06	Dry Synth Bass	Bass	SynBs	--	--	1
87	F07	Kick Bass Legato	Bass	SynBs	--	--	3
88	F08	Keep Dancin' AS2	Bass	SynBs	--	--	3
89	F09	Velo Master	Bass	SynBs	--	--	1
90	F10	Wah Bass	Bass	SynBs	--	--	2
91	F11	Pulse Step AF1	Bass	SynBs	--	--	2
92	F12	Phat Step AS1&2	Bass	SynBs	--	--	2
93	F13	Octave Analog	Bass	SynBs	--	--	2
94	F14	Sync Bass	Bass	SynBs	--	--	1
95	F15	Sync Big	Bass	SynBs	--	--	2
96	F16	Puncher AS1	Bass	SynBs	--	--	2
97	G01	Dark Comp AF1&2	Bass	SynBs	--	--	2
98	G02	Simple Bass AS2	Bass	SynBs	--	--	2
99	G03	Fat Sine	Bass	SynBs	--	--	4
100	G04	Kompressor	Bass	SynBs	--	--	3
101	G05	Dark Uni	Bass	SynBs	--	--	1
102	G06	Fight Bass	Bass	SynBs	--	--	3
103	G07	Byon Bass	Bass	SynBs	--	--	5
104	G08	One Voice	Bass	SynBs	--	--	1
105	G09	Pro-Attack AF1	Bass	SynBs	--	--	2
106	G10	Bobby Bass	Bass	SynBs	--	--	2
107	G11	Trance Bass AS2	Bass	SynBs	--	--	2
108	G12	Short Sequence Bass	Bass	SynBs	--	--	2
109	G13	Lately	Bass	SynBs	--	--	2
110	G14	Faaat Pulse	Bass	SynBs	--	--	3
111	G15	Short PWM Bass	Bass	SynBs	--	--	2
112	G16	Hyper Velocity AF1	Bass	SynBs	--	--	2
113	H01	Deep Point	Bass	SynBs	--	--	2
114	H02	Pulse Stop	Bass	SynBs	--	--	1
115	H03	Oh Bee Bass	Bass	SynBs	--	--	2
116	H04	Booming Bass	Bass	SynBs	S.EFX	--	3
117	H05	Army Bass	Bass	SynBs	SynLd	Dance	2
118	H06	Punchy Drone RB	Bass	SynBs	SynLd	Dance	4
119	H07	Dee Tune	Bass	SynBs	SyCmp	Hook	2
120	H08	Chorus Pulse	Bass	SynBs	SynLd	Dance	1
121	H09	Sweeper	Bass	SynBs	SynLd	Analg	2
122	H10	Old House Organ	Bass	SynBs	Organ	--	4
123	H11	Data Run	Bass	Arp	--	--	1
124	H12	Sharp 3o3	Bass	Arp	--	--	1
125	H13	Short 3o3 Saw	Bass	Arp	--	--	1
126	H14	Acid Fun AS1	SynLd	Arp	Bass	SynBs	1
127	H15	Compu Bass	Bass	Arp	--	--	1
128	H16	Squeaker Bass	Bass	Arp	--	--	1

PRE 4 (MSB=63, LSB=3)

Number		Voice Name	Category 1		Category 2		Element
			Main	Sub	Main	Sub	
1	A01	Violin Solo 1	String	Solo	--	--	3
2	A02	Violin Solo 2 AF1	String	Solo	--	--	1
3	A03	Viola Solo 1	String	Solo	--	--	3
4	A04	Viola Solo 2 AF1	String	Solo	--	--	2
5	A05	Cello Solo	String	Solo	--	--	3
6	A06	Cello Duo AF1	String	Solo	--	--	2
7	A07	Contrabass Solo	String	Solo	--	--	3
8	A08	Contrabass Solo2 AF1	String	Solo	--	--	2
9	A09	Quartet	String	Ensem	--	--	4
10	A10	Small Section	String	Ensem	--	--	3
11	A11	Small Ensemble	String	Ensem	--	--	4
12	A12	Almighty	String	Ensem	--	--	4
13	A13	Medium Section	String	Ensem	--	--	4
14	A14	Medium Hall	String	Ensem	--	--	4
15	A15	Medium Large Section	String	Ensem	--	--	2
16	A16	Quick Bows	String	Ensem	--	--	4
17	B01	Aggressive AF1	String	Ensem	--	--	2
18	B02	Large Section	String	Ensem	--	--	4
19	B03	Octave Ensemble	String	Ensem	--	--	4
20	B04	Full Chamber	String	Ensem	--	--	4
21	B05	Stryngs	String	Ensem	--	--	4
22	B06	Dynamik Bow	String	Ensem	--	--	4
23	B07	Symphonic Pizzicato	String	Pizz	--	--	2
24	B08	Plucky Pizzicato	String	Pizz	--	--	2
25	B09	Octave Pizzes	String	Pizz	--	--	4
26	B10	Tremolo Strings 1	String	Ensem	--	--	4
27	B11	TremoloStrings Small	String	Ensem	--	--	4
28	B12	Spicato Large	String	Pizz	--	--	4
29	B13	Disco AF1	String	Pizz	--	--	4
30	B14	Ens Mix	String	Ensem	--	--	2
31	B15	Lush	String	Ensem	--	--	4
32	B16	Back Ground	String	Ensem	Pads	Warm	4
33	C01	Romantic	String	Ensem	Pads	Brite	4
34	C02	Warm Back	String	Ensem	Pads	Warm	3
35	C03	Stringy	String	Ensem	Pads	Brite	4
36	C04	Big Strings	String	Ensem	Pads	Warm	4
37	C05	PWM Strings	String	Synth	Pads	Analg	3
38	C06	Mourn Strings	String	Synth	Pads	Warm	4
39	C07	VP Soft	String	Synth	Pads	Warm	3
40	C08	PWM Simple	String	Synth	Pads	Analg	3
41	C09	Glassy Rezonant	String	Synth	Pads	Analg	4
42	C10	Superstrings	String	Synth	Pads	Brite	3
43	C11	Light Pad	String	Synth	Pads	Analg	4
44	C12	Noble Pad	String	Synth	Pads	Analg	2
45	C13	Warm Big	String	Ensem	Pads	Warm	4
46	C14	Sentimental	String	Synth	Pads	Warm	4
47	C15	Analog Sweep	String	Synth	Pads	Analg	4
48	C16	Phase Strings AS1	String	Synth	Pads	Analg	4
49	D01	Octave Strings	String	Synth	Pads	Brite	4
50	D02	JP Strings	String	Synth	Pads	Analg	2
51	D03	3Oscillators Vintage	String	Synth	Pads	Brite	3
52	D04	Silver Strings	String	Synth	Pads	Brite	2
53	D05	String Machine	String	Synth	Pads	Warm	3
54	D06	3 Octave Strings	String	Synth	Pads	Brite	4
55	D07	Trance Introduction	String	Synth	Pads	Brite	2
56	D08	Mystic Trance	String	Synth	Pads	Brite	4
57	D09	F.Horn + Strings	String	Ensem	Brass	Orche	4
58	D10	Wood Winds + Strings	String	Synth	SaxWW	WWind	4
59	D11	ElectricViolin AF1&2	String	Solo	--	--	1
60	D12	Tron Violin	String	Synth	--	--	4
61	D13	Tron Strings	String	Synth	--	--	3
62	D14	Tape Strings AS2	String	Synth	--	--	3
63	D15	Orchestronic	String	Synth	Pads	Warm	4
64	D16	Vinyltron	String	Synth	S.EFX	SciFi	4

Number		Voice Name	Category 1		Category 2		Element
			Main	Sub	Main	Sub	
65	E01	Analog Strings	String	Synth	--	--	1
66	E02	Analog Ensemble	String	Ensem	--	--	3
67	E03	Pizz-o-matic	String	Arp	--	--	2
68	E04	Ambient Pizza	String	Arp	Pads	Analg	4
69	E05	Beauty Harp	String	Pizz	--	--	1
70	E06	Stereo Harp	String	Pizz	--	--	3
71	E07	Trumpet 1 AF1	Brass	Solo	--	--	2
72	E08	Tp Romantic Legato	Brass	Solo	--	--	2
73	E09	Classical Trumpet	Brass	Solo	--	--	1
74	E10	Baby Trumpet AF1	Brass	Solo	--	--	2
75	E11	Bright Trumpet AF1	Brass	Solo	--	--	2
76	E12	Tp Soft Jazz Legato	Brass	Solo	--	--	2
77	E13	Legend Mute AF1	Brass	Solo	--	--	3
78	E14	Jazzy Flugel AF1	Brass	Solo	--	--	2
79	E15	Trumpet Section	Brass	BrsEn	--	--	4
80	E16	Trombone 1 AF1	Brass	Solo	--	--	2
81	F01	Blown Bone Legato	Brass	Solo	--	--	1
82	F02	Bright Trombone AF1	Brass	Solo	--	--	2
83	F03	New Orleans Trombone	Brass	Solo	--	--	2
84	F04	French Horn AF1	Brass	Solo	--	--	1
85	F05	French Horn Solo	Brass	Solo	--	--	1
86	F06	BassTuba(Bb)	Brass	Solo	--	--	2
87	F07	Euphonium	Brass	Orche	--	--	2
88	F08	Bony Section	Brass	BrsEn	--	--	4
89	F09	French Horn Section1	Brass	Orche	--	--	2
90	F10	F.Horn + Trombone	Brass	Orche	--	--	4
91	F11	F.Hrn + Trmbn + Trp	Brass	Orche	--	--	4
92	F12	Orchestra Brass	Brass	Orche	--	--	4
93	F13	Movie Horns	Brass	Orche	--	--	4
94	F14	Symphonic	Brass	Orche	--	--	4
95	F15	Smooth Brass	Brass	Orche	--	--	4
96	F16	SoftBrss mp-mf AF1&2	Brass	Orche	--	--	2
97	G01	Dynamic Brass AF1&2	Brass	Orche	--	--	2
98	G02	Accent mf-fall AF1&2	Brass	BrsEn	--	--	4
99	G03	Small Brass Section	Brass	BrsEn	--	--	2
100	G04	Medium Brass Section	Brass	BrsEn	--	--	4
101	G05	Lots O' Brass	Brass	BrsEn	--	--	4
102	G06	Bright Section	Brass	BrsEn	--	--	4
103	G07	Power Section	Brass	BrsEn	--	--	4
104	G08	Shiny Brass	Brass	BrsEn	--	--	4
105	G09	Big Brass AF1&2	Brass	BrsEn	--	--	4
106	G10	Sforzando AF1&2	Brass	BrsEn	--	--	4
107	G11	Soft Brass & Sax	Brass	BrsEn	SaxWW	Sax	4
108	G12	Big Band	Brass	BrsEn	--	--	4
109	G13	Sax Big Band	Brass	BrsEn	SaxWW	Sax	4
110	G14	Velo Falls	Brass	BrsEn	--	--	3
111	G15	Hybrid Section	Brass	Synth	--	--	3
112	G16	Hybrid Bright	Brass	Synth	--	--	3
113	H01	Hybrid Brass Swell	Brass	Synth	--	--	4
114	H02	T Brass	Brass	Synth	--	--	2
115	H03	Lo-fi AS1&2	Brass	BrsEn	--	--	1
116	H04	Quiet Brass	Brass	Synth	--	--	2
117	H05	Big Syn	Brass	Synth	--	--	2
118	H06	Thinth	Brass	Synth	--	--	2
119	H07	XP Brass Stereo	Brass	Synth	Pads	Warm	2
120	H08	Simple Saw Brass	Brass	Synth	Pads	Brite	4
121	H09	Brassy	Brass	Synth	--	--	2
122	H10	Kustom	Brass	Synth	Pads	Brite	3
123	H11	After 1984	Brass	Synth	SyCmp	Analg	4
124	H12	Finale	Brass	Synth	SyCmp	Analg	2
125	H13	Huge CS80	Brass	Synth	--	--	2
126	H14	CS-90	Brass	Synth	--	--	2
127	H15	Ob Soft	Brass	Synth	Pads	Warm	4
128	H16	Ob Horns	Brass	Synth	Pads	Warm	2

PRE 5 (MSB=63, LSB=4)

Number		Voice Name	Category 1		Category 2		Element
			Main	Sub	Main	Sub	
1	A01	Slow PWM Brass	Brass	Synth	--	--	2
2	A02	Soft 5th Brass	Brass	Synth	Pads	Warm	4
3	A03	Soprano Legato	SaxWW	Sax	--	--	2
4	A04	Soprano Soft AF1	SaxWW	Sax	--	--	2
5	A05	Alto Vib Legato	SaxWW	Sax	--	--	3
6	A06	Alto Legato	SaxWW	Sax	--	--	1
7	A07	Alto	SaxWW	Sax	--	--	1
8	A08	Tenor Dynamic AF1	SaxWW	Sax	--	--	3
9	A09	Tenor Soft Legato	SaxWW	Sax	--	--	3
10	A10	Velo Growl Legato	SaxWW	Sax	--	--	3
11	A11	Tenor Growl AF1	SaxWW	Sax	--	--	1
12	A12	Baritone	SaxWW	Sax	--	--	1
13	A13	Hip Bari	SaxWW	Sax	--	--	1
14	A14	Tenor Section	SaxWW	Sax	Brass	BrsEn	3
15	A15	Sax Octave Section	SaxWW	Sax	Brass	BrsEn	4
16	A16	Mixed Sax Section	SaxWW	Sax	Brass	BrsEn	4
17	B01	Flute Legato	SaxWW	Flute	--	--	3
18	B02	Sweet Flute AF1	SaxWW	Flute	--	--	2
19	B03	Wood Flute	SaxWW	Flute	--	--	2
20	B04	Oboe 1 AF1	SaxWW	RPipe	--	--	3
21	B05	Sweet Oboe Legato	SaxWW	RPipe	--	--	2
22	B06	Oboe Soft Legato	SaxWW	RPipe	--	--	2
23	B07	Clarinet 1 AF1	SaxWW	WWind	--	--	3
24	B08	JazzyClarinet Legato	SaxWW	RPipe	--	--	2
25	B09	Bassoon 1 AF1	SaxWW	RPipe	--	--	3
26	B10	Irish Pipe Legato	SaxWW	RPipe	--	--	1
27	B11	2 Flutes	SaxWW	Flute	--	--	3
28	B12	Flute & Clari	SaxWW	Flute	SaxWW	RPipe	4
29	B13	2 Oboes & Bassoon	SaxWW	WWind	--	--	4
30	B14	WoodWind Quartet	SaxWW	WWind	--	--	8
31	B15	Gentle Harp	SaxWW	RPipe	--	--	1
32	B16	Woody Harp	SaxWW	RPipe	--	--	1
33	C01	Bluz Distort	SaxWW	RPipe	--	--	2
34	C02	Campfire	SaxWW	RPipe	--	--	2
35	C03	Tron Flute	SaxWW	Flute	--	--	3
36	C04	Flootz	SaxWW	Flute	--	--	2
37	C05	Huge Lead	SynLd	Analg	--	--	4
38	C06	Bleep Lead AF2	SynLd	Analg	--	--	2
39	C07	Detuned Vintage	SynLd	Analg	--	--	2
40	C08	Space Lead	SynLd	Analg	--	--	2
41	C09	Dual Square Lead	SynLd	Analg	--	--	2
42	C10	Vintage Sync	SynLd	Analg	--	--	2
43	C11	Dirty Hook	SynLd	Analg	SyCmp	Hook	4
44	C12	Nu Mini	SynLd	Analg	--	--	3
45	C13	ProgressiveRock Lead	SynLd	Analg	--	--	3
46	C14	Lucky	SynLd	Analg	--	--	2
47	C15	Opening	SynLd	Analg	--	--	2
48	C16	Rap Lead 1	SynLd	Analg	--	--	1
49	D01	Mini Soft	SynLd	Analg	--	--	2
50	D02	Feeling	SynLd	Analg	--	--	1
51	D03	Early Lead	SynLd	Analg	--	--	2
52	D04	Funky Pulse	SynLd	Digtl	--	--	1
53	D05	Mr. Finger	SynLd	Analg	--	--	2
54	D06	Singleline	SynLd	Analg	--	--	2
55	D07	Soft RnB	SynLd	Analg	--	--	1
56	D08	Wind Synth	SynLd	Analg	--	--	3
57	D09	Broken Sine RBAS1	SynLd	Analg	--	--	1
58	D10	Duck Lead	SynLd	Analg	--	--	1
59	D11	In da Night	SynLd	Analg	--	--	1
60	D12	Mayday MW	SynLd	Analg	--	--	1
61	D13	On D Line	SynLd	Analg	--	--	2
62	D14	Early Soloist	SynLd	Analg	--	--	1
63	D15	Heterodyne	SynLd	Analg	--	--	1
64	D16	Classic 5th	SynLd	Analg	--	--	3

Number		Voice Name	Category 1		Category 2		Element
			Main	Sub	Main	Sub	
65	E01	Vintage Saw	SynLd	Analg	--	--	3
66	E02	Mini Three	SynLd	Digtl	--	--	3
67	E03	Phat Dino	SynLd	Digtl	--	--	3
68	E04	Dynamic Mini	SynLd	Digtl	--	--	3
69	E05	PWM Lead	SynLd	Digtl	--	--	2
70	E06	Pulse Wound	SynLd	Digtl	--	--	1
71	E07	Think Sync	SynLd	Digtl	--	--	3
72	E08	Punch Lead	SynLd	Digtl	SyCmp	Hook	2
73	E09	Bright Saw	SynLd	Digtl	--	--	2
74	E10	Trojan	SynLd	Digtl	--	--	3
75	E11	Wood Panel	SynLd	Digtl	--	--	2
76	E12	Push Ahead	SynLd	Digtl	SyCmp	Hook	1
77	E13	Eight	SynLd	Digtl	--	--	4
78	E14	Sync Power	SynLd	Digtl	--	--	2
79	E15	Glisten Lead	SynLd	Digtl	--	--	4
80	E16	Big Drone	SynLd	Digtl	--	--	4
81	F01	Screameemy	SynLd	Digtl	--	--	2
82	F02	Flange Filter	SynLd	Digtl	--	--	2
83	F03	Sutra	SynLd	Digtl	M.EFX	Move	3
84	F04	Free LFO	SynLd	Digtl	--	--	1
85	F05	Rap Lead 2	SynLd	Digtl	--	--	1
86	F06	Space Power Lead	SynLd	Digtl	SyCmp	Hook	2
87	F07	Nyquist	SynLd	Digtl	--	--	2
88	F08	Digimetal	SynLd	Digtl	--	--	1
89	F09	Saw destroy	SynLd	Digtl	--	--	3
90	F10	Vinalog saw	SynLd	Digtl	--	--	4
91	F11	Mady SQU	SynLd	Digtl	--	--	2
92	F12	Low Undulation	SynLd	Digtl	--	--	4
93	F13	Impact	SynLd	H Hop	SyCmp	Hook	3
94	F14	Talk Mod	SynLd	H Hop	M.EFX	Sweep	2
95	F15	Digital Gangsta	SynLd	H Hop	--	--	1
96	F16	Plastic Squeeze	SynLd	H Hop	--	--	1
97	G01	Pinz Lead	SynLd	H Hop	--	--	1
98	G02	Dancy Saw Lead	SynLd	Dance	SyCmp	Hook	2
99	G03	Buzz Around	SynLd	Dance	SyCmp	Hook	3
100	G04	Xtreme Wheel	SynLd	Dance	--	--	2
101	G05	Supertrance	SynLd	Dance	SyCmp	Hook	4
102	G06	Poly Hook	SynLd	Dance	SyCmp	Hook	2
103	G07	HPF Dance	SynLd	Dance	SyCmp	Hook	2
104	G08	Tekk Glide	SynLd	Dance	--	--	2
105	G09	Growl Tekk	SynLd	Dance	--	--	1
106	G10	Plucked Chordz	SynLd	Dance	--	--	4
107	G11	Chordz	SynLd	Dance	--	--	4
108	G12	Cool Body	SynLd	Dance	--	--	4
109	G13	Twist Sync	SynLd	Dance	--	--	2
110	G14	TEKIE	SynLd	Dance	--	--	4
111	G15	Sonix	SynLd	Dance	--	--	3
112	G16	Big Skid Hook Lead 1	SynLd	Dance	SyCmp	Hook	4
113	H01	Big Skid Hook Lead 2	SynLd	Dance	SyCmp	Hook	4
114	H02	Porta Queen	SynLd	Arp	--	--	2
115	H03	Vicious Dogs	SynLd	Arp	SyCmp	Digtl	4
116	H04	Saw Pad	Pads	Analg	--	--	4
117	H05	Dark Modulation Pad	Pads	Analg	--	--	2
118	H06	Dark Light	Pads	Warm	--	--	2
119	H07	Ambient Synthpad	Pads	Analg	--	--	2
120	H08	5th Lite	Pads	Analg	--	--	4
121	H09	Smooth BPF Sweep	Pads	Analg	--	--	2
122	H10	High Wire	Pads	Analg	--	--	2
123	H11	Trance MW	Pads	Analg	--	--	2
124	H12	Xtreme Sweep	Pads	Analg	M.EFX	Sweep	2
125	H13	Nu WarmPad	Pads	Warm	--	--	2
126	H14	5th Atmosphere	Pads	Warm	--	--	4
127	H15	Dim	Pads	Warm	M.EFX	Ambie	1
128	H16	Simple Air	Pads	Warm	--	--	2

PRE 6 (MSB=63, LSB=5)

Number		Voice Name	Category 1		Category 2		Element
			Main	Sub	Main	Sub	
1	A01	Nature Sine	Pads	Warm	--	--	3
2	A02	Analog	Pads	Warm	--	--	2
3	A03	Perc Pad	Pads	Warm	--	--	4
4	A04	Dark Atmo Pad	Pads	Warm	--	--	4
5	A05	Dark Organ Pad	Pads	Warm	--	--	2
6	A06	Soft Brassy	Pads	Warm	--	--	2
7	A07	Road to Nowhere	Pads	Warm	M.EFX	Sweep	4
8	A08	Sweep Strings	Pads	Warm	String	Synth	3
9	A09	Brass Motion Pad	Pads	Warm	M.EFX	Move	2
10	A10	Luminous	Pads	Warm	M.EFX	Sweep	4
11	A11	Mother Ship	Pads	Choir	--	--	4
12	A12	Warm Backing Pad	Pads	Warm	String	Synth	2
13	A13	Feather	Pads	Warm	String	Synth	4
14	A14	Pan Sphere	Pads	Warm	SaxWW	Flute	4
15	A15	Square	Pads	Analg	--	--	2
16	A16	Shaper	Pads	Brite	M.EFX	Ambie	2
17	B01	Early Digital	Pads	Warm	M.EFX	Ambie	3
18	B02	Dramana	Pads	Brite	M.EFX	Ambie	3
19	B03	Dream Shift	Pads	Brite	--	--	4
20	B04	Remote Space	Pads	Warm	M.EFX	Ambie	2
21	B05	Fathoms	Pads	Warm	M.EFX	Ambie	4
22	B06	SY22 2007	Pads	Warm	M.EFX	Move	1
23	B07	Mother Earth	Pads	Warm	M.EFX	Ambie	3
24	B08	Landing Pad	Pads	Warm	M.EFX	Ambie	2
25	B09	The Breath	Pads	Brite	--	--	4
26	B10	Humanity	Pads	Warm	--	--	2
27	B11	Vowel Pad	Pads	Choir	M.EFX	Move	4
28	B12	Feather Pad	Pads	Brite	--	--	2
29	B13	Slow Attack Pad	Pads	Brite	--	--	2
30	B14	Hi Brite	Pads	Brite	String	Synth	2
31	B15	Pad & Syn	Pads	Brite	SyCmp	Analg	4
32	B16	Cosmic Swell Pad	Pads	Brite	--	--	4
33	C01	Sweet Flange	Pads	Brite	--	--	4
34	C02	Waterfall	Pads	Brite	--	--	4
35	C03	Phase Pad	Pads	Brite	String	Synth	1
36	C04	Pure Synth	Pads	Brite	--	--	4
37	C05	Pearls	Pads	Brite	M.EFX	Ambie	4
38	C06	Flange Wall	Pads	Brite	--	--	1
39	C07	Tornado	Pads	Brite	SyCmp	Digtl	2
40	C08	Ice Rink	Pads	Brite	M.EFX	Sweep	4
41	C09	Turbulence	Pads	Brite	--	--	1
42	C10	Bell Pad	Pads	Brite	CPerc	SynBl	4
43	C11	Paradise	Pads	Brite	--	--	1
44	C12	Yellow River	Pads	Brite	--	--	4
45	C13	Love Me	Pads	Brite	--	--	4
46	C14	Frozen Pad	Pads	Brite	--	--	4
47	C15	Pensive	Pads	Warm	--	--	4
48	C16	Space Vocals	Pads	Choir	--	--	3
49	D01	Haah Pad	Pads	Choir	--	--	4
50	D02	Oooh Pad	Pads	Choir	--	--	4
51	D03	Back in Itopian	Pads	Choir	--	--	4
52	D04	Strings & Choir	Pads	Choir	String	Ensem	4
53	D05	Angel Eyes	Pads	Choir	--	--	3
54	D06	Glass Choir	Pads	Choir	--	--	4
55	D07	Nativity	Pads	Choir	--	--	4
56	D08	Seraphim	Pads	Choir	--	--	4
57	D09	Analog Shine	Pads	Arp	M.EFX	Ambie	2
58	D10	Cosmic Gate	Pads	Arp	M.EFX	Sweep	4
59	D11	Catching Wild Horses	Pads	Arp	M.EFX	Sweep	2
60	D12	High Pass Gate	Pads	Arp	M.EFX	Sweep	2
61	D13	Rhythmic Filterpad 1	Pads	Arp	M.EFX	Move	2
62	D14	Rhythmic Filterpad 2	Pads	Arp	M.EFX	Move	2
63	D15	P5 Resonance Comp	SyCmp	Analg	SynLd	Analg	3
64	D16	P5 Analog Punch	SyCmp	Analg	SynLd	Analg	3

Number		Voice Name	Category 1		Category 2		Element
			Main	Sub	Main	Sub	
65	E01	Cool Trance	SyCmp	Analg	SynLd	Arp	2
66	E02	>Attack<	SyCmp	Analg	--	--	2
67	E03	Club Finger	SyCmp	Analg	--	--	3
68	E04	Wobbly RB	SyCmp	Analg	Pads	Warm	2
69	E05	Ana Dayz	SyCmp	Analg	Pads	Analg	4
70	E06	Airy Nylon	SyCmp	Analg	Guitar	Synth	4
71	E07	Progressive Attack	SyCmp	Analg	M.EFX	Move	3
72	E08	Oracle	SyCmp	Analg	--	--	3
73	E09	Big Comp	SyCmp	Digtl	Pads	Brite	4
74	E10	Rezz Punch	SyCmp	Digtl	--	--	4
75	E11	Resonant Clavi	SyCmp	Digtl	--	--	1
76	E12	Straight RB	SyCmp	Digtl	SynLd	Analg	3
77	E13	Psych Noise	SyCmp	Digtl	SynLd	Digtl	4
78	E14	Squiffy Misbehaving	SyCmp	Digtl	--	--	3
79	E15	Lektro Codes	SyCmp	Digtl	SynLd	Digtl	3
80	E16	Hard FM Keys	SyCmp	Digtl	SynLd	Digtl	2
81	F01	W Phaser	SyCmp	Digtl	--	--	2
82	F02	DPCM Attack	SyCmp	Digtl	--	--	2
83	F03	Talk	SyCmp	Digtl	SynLd	Digtl	3
84	F04	Digy_SEQ	SyCmp	Arp	SynLd	Digtl	3
85	F05	Nerve Nasty	SyCmp	Arp	--	--	3
86	F06	Ring_Zplus	SyCmp	Digtl	--	--	2
87	F07	Trance Attack	SyCmp	Digtl	String	Pizz	3
88	F08	Tekno Attack AF1&2	SyCmp	Digtl	--	--	3
89	F09	PWM Percussion	SyCmp	Digtl	--	--	2
90	F10	Stabby	SyCmp	Digtl	--	--	3
91	F11	Detroit Stab	SyCmp	Digtl	--	--	3
92	F12	Corrado	SyCmp	Digtl	S.EFX	--	3
93	F13	Synthetique	SyCmp	Digtl	--	--	1
94	F14	Noiz Rezz	SyCmp	Digtl	Pads	Brite	3
95	F15	Tuxedo	SyCmp	Digtl	M.EFX	Sweep	4
96	F16	Queens	SyCmp	Digtl	Pads	Warm	3
97	G01	Hip Voice	SyCmp	Digtl	SynLd	H Hop	2
98	G02	GX1	SyCmp	Fade	--	--	4
99	G03	Night Watch	SyCmp	Fade	--	--	3
100	G04	Pluck Bells	SyCmp	Fade	CPerc	SynBl	4
101	G05	Power Dance Chords	SyCmp	Hook	Pads	Analg	4
102	G06	Hyper Trance	SyCmp	Digtl	SynLd	Digtl	4
103	G07	Cosmic Psyche	SyCmp	Digtl	M.EFX	Move	3
104	G08	Chillin' Chords	SyCmp	Arp	SyCmp	Hook	2
105	G09	Dirty Chordz	SyCmp	Arp	SyCmp	Hook	4
106	G10	Wild Horses	SyCmp	Arp	--	--	3
107	G11	Sixpack AF1&2	SyCmp	Arp	--	--	1
108	G12	Percussive Chords	SyCmp	Arp	--	--	2
109	G13	Chordmaster	SyCmp	Arp	--	--	2
110	G14	In the Mirror	SyCmp	Arp	--	--	1
111	G15	Come together!	SyCmp	Arp	--	--	1
112	G16	Happy Hour	SyCmp	Arp	Pads	Arp	2
113	H01	Recycling	SyCmp	Arp	Pads	Arp	2
114	H02	Digital Dreaming	SyCmp	Arp	--	--	4
115	H03	Carpenter's Wife	SyCmp	Arp	--	--	1
116	H04	Electronic Games	SyCmp	Arp	--	--	2
117	H05	Dancing Waves	SyCmp	Arp	--	--	1
118	H06	Hit Factory	SyCmp	Arp	--	--	1
119	H07	Freaky Loop	SyCmp	Arp	--	--	1
120	H08	Mr. Wah!	SyCmp	Arp	M.EFX	Move	2
121	H09	Chill Comp 1	SyCmp	Arp	M.EFX	Move	1
122	H10	Chill Comp 2	M.EFX	Arp	--	--	1
123	H11	Kalimboidal	SyCmp	Arp	CPerc	SynBl	2
124	H12	Bippus	SyCmp	Arp	--	--	2
125	H13	Virtuoso Sequencia	SyCmp	Arp	--	--	3
126	H14	Fat Saw Arpeggio	SyCmp	Arp	--	--	2
127	H15	Trancious Line	SyCmp	Arp	--	--	1
128	H16	Metal Plate	SyCmp	Arp	--	--	3

PRE 7 (MSB=63, LSB=6)

Number		Voice Name	Category 1		Category 2		Element
			Main	Sub	Main	Sub	
1	A01	Fifth Dancer	SyCmp	Arp	--	--	2
2	A02	Percussive Sequence	SyCmp	Arp	--	--	1
3	A03	Simply Faaat	SyCmp	Arp	SynLd	Dance	2
4	A04	Bright Dance	SyCmp	Arp	SynLd	Dance	2
5	A05	Quadro Tune	SyCmp	Arp	--	--	4
6	A06	Champ	SynLd	Arp	SynLd	Analg	2
7	A07	Men In Yellow	S.EFX	Move	M.EFX	Move	4
8	A08	Metamorphosis	S.EFX	Move	--	--	2
9	A09	Perplex	S.EFX	Move	--	--	2
10	A10	Outer Planet	S.EFX	Move	--	--	2
11	A11	Industrial	S.EFX	Move	--	--	2
12	A12	Space Walking	S.EFX	Move	--	--	1
13	A13	Scraper	S.EFX	Move	--	--	1
14	A14	SE_02 <Zero Two>	S.EFX	Move	--	--	3
15	A15	Talking Machines	S.EFX	Move	--	--	2
16	A16	Tobi Mage	S.EFX	Move	--	--	3
17	B01	Bitzz MW	S.EFX	Move	--	--	1
18	B02	Thexism	S.EFX	Move	--	--	4
19	B03	In My Head	S.EFX	Move	--	--	4
20	B04	Toda	S.EFX	Ambie	--	--	3
21	B05	Water Tank	S.EFX	Ambie	--	--	3
22	B06	Auto Trapeze	S.EFX	Ambie	--	--	4
23	B07	Harpist's Nightmare	S.EFX	Ambie	--	--	2
24	B08	Find Newgt!	S.EFX	Ambie	--	--	4
25	B09	Nile River	S.EFX	Natur	--	--	1
26	B10	New Age Atmo	S.EFX	Natur	--	--	4
27	B11	Wind Blows	S.EFX	Natur	--	--	4
28	B12	Fire!	S.EFX	Natur	--	--	4
29	B13	Scratching Machine	S.EFX	SciFi	--	--	2
30	B14	Goa Psyche	S.EFX	SciFi	--	--	2
31	B15	Wait For Bad Weather	S.EFX	SciFi	--	--	3
32	B16	Reverse The Audio	S.EFX	SciFi	--	--	2
33	C01	Radio Static	S.EFX	SciFi	--	--	2
34	C02	Modifier X	S.EFX	SciFi	--	--	2
35	C03	Surveillance	S.EFX	SciFi	--	--	1
36	C04	Noise FX	S.EFX	SciFi	--	--	1
37	C05	Sample&Hold Vintage	S.EFX	SciFi	--	--	1
38	C06	Lazerzz	S.EFX	SciFi	--	--	2
39	C07	uhohhrr	S.EFX	SciFi	--	--	2
40	C08	On The Fritz	S.EFX	SciFi	--	--	1
41	C09	Scratch Thing MW	S.EFX	Arp	--	--	1
42	C10	Trash Can Lid Band	S.EFX	Arp	Dr/Pc	Synth	4
43	C11	Piston Engine	S.EFX	Arp	--	--	3
44	C12	Waka Waka Noize	S.EFX	Arp	--	--	4
45	C13	Argentina	S.EFX	SciFi	M.EFX	Move	4
46	C14	Gate of Eden	M.EFX	Move	--	--	4
47	C15	Wave Journey	M.EFX	Move	--	--	8
48	C16	Whispering Ghosts	M.EFX	Move	--	--	4
49	D01	Nighttrain to Munich	M.EFX	Move	Pads	Brite	4
50	D02	Morning Dew	M.EFX	Move	Pads	Brite	4
51	D03	Calling Mr. Reso	M.EFX	Move	Pads	Brite	4
52	D04	2 Switches to Heaven	M.EFX	Move	Pads	Warm	4
53	D05	Cell Division	M.EFX	Move	Pads	Warm	1
54	D06	Jumping Needle	M.EFX	Move	S.EFX	Arp	1
55	D07	SEKAI-ISAN	M.EFX	Move	S.EFX	Move	4
56	D08	Setsunai AF2	M.EFX	Move	Pads	Warm	4
57	D09	Week End	M.EFX	Move	Pads	Warm	4
58	D10	Dragonfly	S.EFX	SciFi	M.EFX	Ambie	2
59	D11	TiRiPAD	M.EFX	Move	--	--	4
60	D12	Cluster	M.EFX	Move	--	--	4
61	D13	Xtreme Rezz	M.EFX	Move	Pads	Warm	4
62	D14	Bit Space	M.EFX	Move	Pads	Warm	3
63	D15	My Reality	M.EFX	Move	Pads	Warm	4
64	D16	Waterproof	M.EFX	Move	SyCmp	Arp	4

Number		Voice Name	Category 1		Category 2		Element
			Main	Sub	Main	Sub	
65	E01	Magnetics	M.EFX	Move	Pads	Warm	4
66	E02	Sand	M.EFX	Move	--	--	4
67	E03	Felicity	M.EFX	Move	Pads	Warm	4
68	E04	Vibrancy	M.EFX	Move	Pads	Warm	4
69	E05	Metalflake	M.EFX	Move	--	--	1
70	E06	Radio Venus	M.EFX	Move	Pads	Warm	4
71	E07	Elec Blue	M.EFX	Move	Pads	Warm	3
72	E08	Chyo Ethno	M.EFX	Move	--	--	4
73	E09	Metal Shaper	M.EFX	Move	SyCmp	Arp	1
74	E10	Calculator	M.EFX	Move	SyCmp	Arp	1
75	E11	konjoh BEAM	M.EFX	Move	--	--	4
76	E12	Blizzard	M.EFX	Ambie	--	--	2
77	E13	SINGING BOWL	M.EFX	Ambie	--	--	2
78	E14	Vektris	M.EFX	Ambie	S.EFX	Ambie	1
79	E15	Metalvox Pad	M.EFX	Ambie	S.EFX	SciFi	3
80	E16	Refraction	M.EFX	Ambie	S.EFX	Ambie	3
81	F01	Philanger	M.EFX	Ambie	S.EFX	SciFi	1
82	F02	Slippery Ambience	M.EFX	Move	--	--	1
83	F03	Ellipsotron	M.EFX	Move	S.EFX	Arp	2
84	F04	Envelope	M.EFX	Move	S.EFX	Ambie	3
85	F05	Whatsis	M.EFX	Ambie	Pads	Warm	3
86	F06	Pearl Collection	M.EFX	Ambie	--	--	4
87	F07	Four Dimensions	M.EFX	Ambie	Pads	Warm	1
88	F08	Hallucination	M.EFX	Ambie	--	--	1
89	F09	Arctic Sequence	M.EFX	Ambie	--	--	1
90	F10	Drifting	M.EFX	Ambie	--	--	4
91	F11	Electraid	M.EFX	Ambie	--	--	4
92	F12	Bed Time Story	M.EFX	Ambie	CPerc	Arp	2
93	F13	Clearing	M.EFX	Sweep	Pads	Brite	2
94	F14	Long HiPa	M.EFX	Sweep	Pads	Brite	4
95	F15	Quad Swell	M.EFX	Sweep	Pads	Warm	4
96	F16	New Stab	M.EFX	Hit	Pads	Brite	4
97	G01	Vinyl Hit	M.EFX	Hit	--	--	4
98	G02	Hit Me	M.EFX	Hit	String	Ensem	4
99	G03	Ambient Bite	M.EFX	Hit	--	--	4
100	G04	Green Valley	M.EFX	Arp	Pads	Analg	4
101	G05	Everlasting Glory	M.EFX	Arp	Pads	Arp	4
102	G06	Thinking of You	M.EFX	Arp	Pads	Analg	4
103	G07	Festival of Harmony	M.EFX	Arp	Pads	Arp	4
104	G08	Paris at Night	M.EFX	Arp	Pads	Warm	4
105	G09	On my Way to UK	M.EFX	Arp	String	Ensem	4
106	G10	Chillin' Ibiza	M.EFX	Arp	Pads	Warm	3
107	G11	Heavens Door	M.EFX	Arp	Pads	Warm	4
108	G12	Cocktail	M.EFX	Arp	Pads	Warm	2
109	G13	Vanilla	M.EFX	Arp	--	--	3
110	G14	Ibiza Groove	M.EFX	Arp	--	--	4
111	G15	Nylon Chill	M.EFX	Arp	Pads	Choir	4
112	G16	Xtreme Harp	M.EFX	Arp	--	--	3
113	H01	Trancing in the Rain	M.EFX	Arp	Pads	Brite	4
114	H02	Gated Detune	M.EFX	Arp	SyCmp	Arp	2
115	H03	Gated Choir	M.EFX	Arp	Pads	Arp	4
116	H04	Exotic	M.EFX	Arp	SyCmp	Analg	3
117	H05	Syncscraper	M.EFX	Arp	SyCmp	Digtl	2
118	H06	Ethnotic	M.EFX	Arp	--	--	3
119	H07	ComSat	M.EFX	Arp	SyCmp	Arp	2
120	H08	Investikator	M.EFX	Arp	Dr/Pc	Arp	1
121	H09	Monkey Bars	M.EFX	Arp	Dr/Pc	Arp	2
122	H10	Chilltrancer	M.EFX	Arp	Dr/Pc	Arp	2
123	H11	Random Beatz	M.EFX	Arp	Dr/Pc	Arp	1
124	H12	Electro Hood	M.EFX	Arp	Dr/Pc	Arp	2
125	H13	My Subwoofers	M.EFX	Arp	Dr/Pc	Arp	3
126	H14	Mister Sinister	M.EFX	Arp	Dr/Pc	Arp	2
127	H15	Polyrhythm	M.EFX	Arp	Dr/Pc	Arp	4
128	H16	Blood Flow	M.EFX	Arp	--	--	3

PRE 8 (MSB=63, LSB=7)

Number		Voice Name	Category 1		Category 2		Element
			Main	Sub	Main	Sub	
1	A01	On The Verge	M.EFX	Arp	SyCmp	Arp	3
2	A02	Droid	M.EFX	Arp	--	--	2
3	A03	Worker Ant	M.EFX	Arp	--	--	4
4	A04	Chopp Lingo	M.EFX	Arp	SynLd	H Hop	2
5	A05	Vinyl Beatnik	M.EFX	Arp	--	--	4
6	A06	Drop Zone ARP	M.EFX	Arp	--	--	2
7	A07	Particle	M.EFX	Arp	--	--	2
8	A08	Simple Arp	M.EFX	Arp	--	--	1
9	A09	Cyber Cycle	M.EFX	Arp	--	--	1
10	A10	BollogPuls	M.EFX	Arp	--	--	4
11	A11	Octopus	M.EFX	Arp	CPerc	Arp	2
12	A12	Electronic Beatz	M.EFX	Arp	CPerc	Arp	1
13	A13	Dreamin' of You	M.EFX	Arp	Pads	Analg	4
14	A14	Brothers & Sisters	M.EFX	Arp	SyCmp	Arp	4
15	A15	Pizza No.1	M.EFX	Arp	--	--	3
16	A16	Electronix	M.EFX	Arp	--	--	2
17	B01	TekkNow	M.EFX	Arp	SyCmp	Arp	4
18	B02	Hollow Sequence	M.EFX	Arp	Pads	Warm	1
19	B03	Icicle	M.EFX	Arp	--	--	2
20	B04	Jegog	M.EFX	Arp	SyCmp	Arp	1
21	B05	Octo Strobe 1	M.EFX	Arp	SyCmp	Arp	1
22	B06	Octo Strobe 2	M.EFX	Arp	SyCmp	Arp	1
23	B07	Random Waves	M.EFX	Arp	SyCmp	Arp	1
24	B08	Semar	M.EFX	Arp	SyCmp	Arp	2
25	B09	Trailing Headlights	M.EFX	Arp	SyCmp	Arp	2
26	B10	Dream Winds	M.EFX	Arp	--	--	1
27	B11	Kemence	Ethnc	Bowed	String	Solo	2
28	B12	Kemen Wet	Ethnc	Bowed	String	Solo	3
29	B13	Yayli	Ethnc	Bowed	String	Ensem	4
30	B14	Kawala	Ethnc	Bowed	SaxWW	Flute	1
31	B15	Santur	Ethnc	Struk	--	--	2
32	B16	Baglama	Ethnc	Pluk	--	--	3
33	C01	Kotoun	Ethnc	Pluk	--	--	3
34	C02	Kanun	Ethnc	Pluk	--	--	2
35	C03	Bouzuki	Ethnc	Pluk	--	--	3
36	C04	Oud Tremolo Vel	Ethnc	Pluk	--	--	1
37	C05	SazFeeze	Ethnc	Pluk	--	--	3
38	C06	Where Am I?	Ethnc	Pluk	Pads	Warm	3
39	C07	Sakura	Ethnc	Pluk	Pads	Warm	3
40	C08	Nomad	Ethnc	Pluk	Pads	Warm	2
41	C09	Pluk-o-dy	Ethnc	Pluk	--	--	3
42	C10	Tambura	Ethnc	Pluk	--	--	2
43	C11	Sitar MW	Ethnc	Pluk	--	--	2
44	C12	Tabla Zone	Ethnc	Struk	Dr/Pc	Perc	1
45	C13	Udu	Ethnc	Struk	Dr/Pc	Perc	2
46	C14	Djembe	Ethnc	Struk	Dr/Pc	Perc	2
47	C15	Dhol	Ethnc	Struk	Dr/Pc	Perc	2
48	C16	Khol	Ethnc	Struk	Dr/Pc	Perc	3
49	D01	Ney	Ethnc	Blown	SaxWW	Flute	1
50	D02	Zurna	Ethnc	Blown	SaxWW	RPipe	1
51	D03	Pungi	Ethnc	Blown	SaxWW	RPipe	2
52	D04	Shehnai 1	Ethnc	Blown	SaxWW	RPipe	2
53	D05	Didgeridoo	Ethnc	Blown	SaxWW	RPipe	2
54	D06	Snake Charmer	Ethnc	Blown	--	--	4
55	D07	Mythic Flute	Ethnc	Blown	SaxWW	RPipe	4
56	D08	Ethnology	Ethnc	Arp	Dr/Pc	Perc	4
57	D09	Oztralian	Ethnc	Arp	M.EFX	Arp	2
58	D10	8Z Destruct	Dr/Pc	Arp	--	--	2
59	D11	8Z Jarrin	Dr/Pc	Arp	--	--	2
60	D12	8Z Romps	Dr/Pc	Arp	--	--	2
61	D13	8Z Glitch	Dr/Pc	Arp	--	--	2
62	D14	8Z Oxidized	Dr/Pc	Arp	--	--	2
63	D15	8Z D&B Machine	Dr/Pc	Arp	--	--	2
64	D16	8Z Down Tempo	Dr/Pc	Arp	--	--	2

Number		Voice Name	Category 1		Category 2		Element
			Main	Sub	Main	Sub	
65	E01	8Z Early Lo-Fi	Dr/Pc	Arp	--	--	1
66	E02	8Z Noize Xpress	Dr/Pc	Arp	--	--	1
67	E03	8Z Trance Basics 1	Dr/Pc	Arp	--	--	1
68	E04	8Z Reverse Beatz	Dr/Pc	Arp	--	--	1
69	E05	8Z Crush Dance	Dr/Pc	Arp	--	--	1
70	E06	8Z Heavy Hearts	Dr/Pc	Arp	--	--	1
71	E07	8Z Chilly Breakz	Dr/Pc	Arp	--	--	1
72	E08	8Z Gated Beatz	Dr/Pc	Arp	--	--	1
73	E09	8Z Hip Hop Shakers	Dr/Pc	Arp	--	--	1
74	E10	8Z Blip Hop	Dr/Pc	Arp	--	--	1
75	E11	8Z Nasty Glitch	Dr/Pc	Arp	--	--	2
76	E12	8Z Scratch	Dr/Pc	Arp	--	--	1
77	E13	8Z Tod	Dr/Pc	Arp	--	--	1
78	E14	8Z Psychedelic 1	Dr/Pc	Arp	--	--	2
79	E15	8Z Psychedelic 2	Dr/Pc	Arp	--	--	2
80	E16	8Z Dub Element	Dr/Pc	Arp	--	--	2
81	F01	Mega Nylon	Guitar	A.Gtr	Guitar	Arp	2
82	F02	Mega Steel	Guitar	A.Gtr	Guitar	Arp	2
83	F03	Mega 12 Steel	Guitar	A.Gtr	Guitar	Arp	4
84	F04	Mega 60s Clean	Guitar	E.Cln	Guitar	Arp	1
85	F05	Mega 60s ChorusCombo	Guitar	E.Cln	Guitar	Arp	1
86	F06	Mega 60s Tremolo	Guitar	E.Cln	Guitar	Arp	1
87	F07	Mega 60s Blues Tone	Guitar	E.Cln	Guitar	Arp	1
88	F08	Mega 60s Phaser	Guitar	E.Cln	Guitar	Arp	1
89	F09	Mega 60s Tube Tone	Guitar	E.Dst	Guitar	Arp	1
90	F10	Mega 60s Dist Stack	Guitar	E.Dst	Guitar	Arp	1
91	F11	Mega 60s Road House	Guitar	E.Dst	Guitar	Arp	1
92	F12	Mega 60s Small Blues	Guitar	E.Cln	Guitar	Arp	1
93	F13	Mega 60s Pedal Wah	Guitar	E.Dst	Guitar	Arp	1
94	F14	Mega 60s VCM T.Wah	Guitar	E.Dst	Guitar	Arp	1
95	F15	Mega 60s T.Wah&Dist	Guitar	E.Dst	Guitar	Arp	1
96	F16	Mega 60s Jet Flanger	Guitar	E.Dst	Guitar	Arp	1
97	G01	Mega 1coil Clean	Guitar	E.Cln	Guitar	Arp	1
98	G02	Mega 1coil Chorus	Guitar	E.Cln	Guitar	Arp	1
99	G03	Mega 1coil Tremolo	Guitar	E.Cln	Guitar	Arp	1
100	G04	Mega 1coil BluesTone	Guitar	E.Cln	Guitar	Arp	1
101	G05	Mega 1coil Phaser	Guitar	E.Cln	Guitar	Arp	1
102	G06	Mega 1coil Tube Tone	Guitar	E.Cln	Guitar	Arp	1
103	G07	Mega 1coil Tube Amp1	Guitar	E.Dst	Guitar	Arp	1
104	G08	Mega 1coil Tube Amp2	Guitar	E.Dst	Guitar	Arp	1
105	G09	Mega 1coil Roadhouse	Guitar	E.Dst	Guitar	Arp	1
106	G10	Mega 1coil VCM T.Wah	Guitar	E.Cln	Guitar	Arp	1
107	G11	Mega 60s Clean Delay	Guitar	E.Cln	Guitar	Arp	1
108	G12	Mega 60s Slap Clean	Guitar	E.Cln	Guitar	Arp	1
109	G13	Mega 60s Slap Dist	Guitar	E.Cln	Guitar	Arp	1
110	G14	Mega 1coil SlapClean	Guitar	E.Cln	Guitar	Arp	1
111	G15	Mega 1coil Slap Dist	Guitar	E.Dst	Guitar	Arp	1
112	G16	Mega1coilSlpPedalWah	Guitar	E.Cln	Guitar	Arp	1
113	H01	Mega Ovdr Distortion	Guitar	E.Dst	Guitar	Arp	2
114	H02	Mega Ovdr Fuzz	Guitar	E.Dst	Guitar	Arp	2
115	H03	Mega Acoustic Bass	Bass	ABass	Bass	Arp	1
116	H04	Mega Finger+Harmonic	Bass	EBass	Bass	Arp	1
117	H05	Mega Fretless Bass	Bass	EBass	Bass	Arp	1
118	H06	Mega Pick Open Amped	Bass	EBass	Bass	Arp	1
119	H07	Mega Pick Mute Amped	Bass	EBass	Bass	Arp	1
120	H08	Mega Slap Bass	Bass	EBass	Bass	Arp	1
121	H09	Mega Finger+Slap	Bass	EBass	Bass	Arp	1
122	H10	Mega Finger+Pull Amp	Bass	EBass	Bass	Arp	1
123	H11	Mega Pick Open Mute	Bass	EBass	Bass	Arp	1
124	H12	Mega Pick OpMt Dark	Bass	EBass	Bass	Arp	1
125	H13	Vocoder with Delay	Pads	Choir	--	--	4
126	H14	Funky Vocoder	SynLd	Analg	Pads	Choir	4
127	H15	Vocoder Pad 1	Pads	Choir	--	--	5
128	H16	Vocoder Pad 2	Pads	Choir	--	--	4

GM (MSB=0, LSB=0)

Number		Voice Name	Category 1		Category 2		Element
			Main	Sub	Main	Sub	
1	A01	Concert Grand Piano	Piano	APno	--	--	2
2	A02	Rock Brite Piano	Piano	Modrn	--	--	1
3	A03	CP 2007	Piano	Vintg	--	--	1
4	A04	Honkytonk	Piano	Vintg	--	--	4
5	A05	E.Piano 1	Keys	EP	--	--	1
6	A06	E.Piano 2	Keys	FM	--	--	2
7	A07	Harpsichord	Keys	Clavi	--	--	1
8	A08	Brite Clavi	Keys	Clavi	--	--	1
9	A09	Celesta	CPerc	Malet	--	--	1
10	A10	Glocken	CPerc	Malet	--	--	1
11	A11	Music Box	CPerc	Bell	--	--	3
12	A12	Vibes	CPerc	Malet	--	--	2
13	A13	Marimba	CPerc	Malet	--	--	2
14	A14	Xylophone	CPerc	Malet	--	--	2
15	A15	Tubular Bell 1	CPerc	Bell	--	--	3
16	A16	Dulcimer	CPerc	PDrum	--	--	2
17	B01	Draw Organ	Organ	TnWhl	--	--	2
18	B02	Percussive Organ	Organ	TnWhl	--	--	2
19	B03	Rock Organ	Organ	TnWhl	--	--	2
20	B04	Church Organ	Organ	Pipe	--	--	3
21	B05	Reed Organ	Organ	Pipe	--	--	2
22	B06	Accordion	Organ	Pipe	--	--	1
23	B07	Harmonica	SaxWW	RPipe	--	--	1
24	B08	Tango Accordion 1	Organ	Pipe	--	--	1
25	B09	Nylon Guitar	Guitar	A.Gtr	--	--	2
26	B10	Steel Guitar	Guitar	A.Gtr	--	--	2
27	B11	Jazz Guitar	Guitar	E.Cln	--	--	2
28	B12	Clean Guitar	Guitar	E.Cln	--	--	1
29	B13	Mute Guitar	Guitar	E.Cln	--	--	1
30	B14	Overdrive Guitar	Guitar	E.Dst	--	--	2
31	B15	Distortion Guitar	Guitar	E.Dst	--	--	2
32	B16	Guitar Harmonics	Guitar	E.Dst	--	--	2
33	C01	Acoustic Bass	Bass	ABass	--	--	1
34	C02	Finger Bass	Bass	EBass	--	--	2
35	C03	Pick Bass	Bass	EBass	--	--	2
36	C04	Fretless Bass	Bass	EBass	--	--	1
37	C05	Slap Bass 1	Bass	EBass	--	--	1
38	C06	Slap Bass 2 vel	Bass	EBass	--	--	1
39	C07	Synth Bass 1	Bass	SynBs	--	--	2
40	C08	Synth Bass 2	Bass	SynBs	--	--	2
41	C09	Violin	String	Solo	--	--	3
42	C10	Viola	String	Solo	--	--	3
43	C11	Cello	String	Solo	--	--	2
44	C12	Contrabass	String	Solo	--	--	2
45	C13	Tremolo Strings 2	String	Ensem	--	--	2
46	C14	Pizzicato	String	Pizz	--	--	2
47	C15	Harp	String	Pizz	--	--	1
48	C16	Timpani + Cymbal	CPerc	PDrum	--	--	4
49	D01	Strings Section 1	String	Ensem	--	--	2
50	D02	Strings Section 2	String	Ensem	--	--	2
51	D03	Synth Strings 1	String	Synth	--	--	3
52	D04	Synth Strings 2	String	Synth	--	--	3
53	D05	Aah Choir	Pads	Choir	--	--	2
54	D06	Ooh Choir	Pads	Choir	--	--	2
55	D07	Syn Voice	Pads	Choir	--	--	3
56	D08	Orchestra Hit	M.EFX	Hit	--	--	4
57	D09	Trumpet 2	Brass	Solo	--	--	1
58	D10	Trombone 2	Brass	Solo	--	--	1
59	D11	Tuba	Brass	Solo	--	--	1
60	D12	Mute Trumpet	Brass	Solo	--	--	1
61	D13	French Horns	Brass	Orche	--	--	2
62	D14	Brass Section	Brass	BrsEn	--	--	3
63	D15	Synth Brass 1	Brass	Synth	--	--	3
64	D16	Synth Brass 2	Brass	Synth	--	--	3

Number		Voice Name	Category 1		Category 2		Element
			Main	Sub	Main	Sub	
65	E01	Soprano Sax	SaxWW	Sax	--	--	3
66	E02	Alto Sax	SaxWW	Sax	--	--	1
67	E03	Tenor Sax	SaxWW	Sax	--	--	2
68	E04	Baritone Sax	SaxWW	Sax	--	--	1
69	E05	Oboe 2	SaxWW	RPipe	--	--	2
70	E06	English Horn	SaxWW	RPipe	--	--	1
71	E07	Bassoon 2	SaxWW	RPipe	--	--	2
72	E08	Clarinet 2	SaxWW	RPipe	--	--	3
73	E09	Piccolo	SaxWW	Flute	--	--	1
74	E10	Flute	SaxWW	Flute	--	--	2
75	E11	Recorder	SaxWW	WWind	--	--	1
76	E12	Panflute	SaxWW	Flute	--	--	1
77	E13	Bottle	SaxWW	Flute	--	--	2
78	E14	Shakuhachi	SaxWW	Flute	--	--	2
79	E15	Whistle	SaxWW	WWind	--	--	2
80	E16	Ocarina	SaxWW	WWind	--	--	2
81	F01	Square Lead	SynLd	Analg	--	--	2
82	F02	Saw Lead	SynLd	Analg	--	--	2
83	F03	Calliope Lead	SynLd	Analg	--	--	2
84	F04	Chiff Lead	SynLd	Analg	--	--	1
85	F05	Charan Lead	SynLd	Digtl	--	--	2
86	F06	Voice Lead	SynLd	Analg	Pads	Choir	4
87	F07	Fifth Lead	SynLd	Analg	--	--	2
88	F08	Bass & Lead	SynLd	Analg	Bass	SynBs	1
89	F09	New Age Pad	Pads	Brite	--	--	2
90	F10	Warm Pad	Pads	Warm	--	--	2
91	F11	Poly Synth Pad	Pads	Analg	SyCmp	Analg	2
92	F12	Choir Pad	Pads	Choir	--	--	3
93	F13	Bowed Pad	Pads	Warm	--	--	2
94	F14	Metal Pad	Pads	Brite	--	--	2
95	F15	Halo Pad	Pads	Brite	--	--	2
96	F16	Sweep Pad	Pads	Brite	--	--	4
97	G01	Rain Pad	M.EFX	Move	--	--	2
98	G02	Sound Track	Pads	Brite	--	--	3
99	G03	Crystal	CPerc	Bell	SyCmp	Digtl	3
100	G04	Atmosphere	Pads	Warm	--	--	3
101	G05	Brightness	SyCmp	Digtl	--	--	2
102	G06	Goblin	M.EFX	Sweep	--	--	2
103	G07	Echoes	M.EFX	Move	Pads	Brite	3
104	G08	Sci-Fi	Pads	Brite	--	--	2
105	G09	Sitar 1	Ethnc	Pluk	--	--	1
106	G10	Banjo 1	Ethnc	Pluk	--	--	1
107	G11	Shamisen	Ethnc	Pluk	--	--	1
108	G12	Koto	Ethnc	Pluk	--	--	2
109	G13	Kalimba	CPerc	Malet	--	--	2
110	G14	Bagpipe	SaxWW	RPipe	--	--	2
111	G15	Fiddle	Ethnc	Bowed	--	--	2
112	G16	Shehnai 2	SaxWW	WWind	--	--	1
113	H01	Tinkle Bell	CPerc	Bell	--	--	2
114	H02	Agogo	Dr/Pc	Perc	CPerc	Bell	1
115	H03	Steel Drum	CPerc	PDrum	--	--	2
116	H04	Woodblock	Dr/Pc	Perc	--	--	1
117	H05	Taiko Drum	Dr/Pc	Perc	--	--	2
118	H06	Melodic Tom	Dr/Pc	Drums	--	--	1
119	H07	Synth Drum	Dr/Pc	Drums	--	--	1
120	H08	Reverse Cymbal	S.EFX	Move	--	--	1
121	H09	Fret Noise	S.EFX	Natur	--	--	2
122	H10	Breath Noiz	S.EFX	Natur	--	--	1
123	H11	Seashore	S.EFX	Natur	--	--	2
124	H12	Tweet	S.EFX	Natur	--	--	1
125	H13	Telephone	S.EFX	Natur	--	--	1
126	H14	Helicopter	S.EFX	Natur	--	--	2
127	H15	Applause	S.EFX	Natur	--	--	2
128	H16	Gunshot	S.EFX	Natur	--	--	1

USR 1 (MSB=63, LSB=8)

Number		Voice Name	Category 1		Category 2		Element
			Main	Sub	Main	Sub	
1	A01	Natural Grand S6	Piano	APno	--	--	2
2	A02	Piano Rock S6	Piano	Modrn	--	--	2
3	A03	Woody Piano S6	Piano	Vintg	--	--	2
4	A04	Intimate S6	Piano	Vintg	--	--	2
5	A05	Clavi Bril Treble	Keys	Clavi	--	--	1
6	A06	Clavi Amped	Keys	Clavi	--	--	1
7	A07	Clavi Phaser	Keys	Clavi	--	--	1
8	A08	Clavi Touch Wah	Keys	Clavi	--	--	1
9	A09	Clavi PedalWahFC2&MW	Keys	Clavi	--	--	1
10	A10	Natural Harpsichord	Keys	Clavi	--	--	8
11	A11	Octave Harpsichord	Keys	Clavi	--	--	8
12	A12	Vx Full Bars	Organ	Combo	--	--	4
13	A13	Vx Dark Bars	Organ	Combo	--	--	3
14	A14	Fr All Tabs	Organ	Combo	--	--	1
15	A15	Fr Bright Boost	Organ	Combo	--	--	3
16	A16	Fr String Tabs	Organ	Combo	--	--	3
17	B01	Vx Full Bars Amped	Organ	Combo	--	--	4
18	B02	Vx Surf Organ	Organ	Combo	--	--	4
19	B03	Fr Raspy Tabs	Organ	Combo	--	--	3
20	B04	Master Accordion	Organ	Pipe	--	--	1
21	B05	French Musette	Organ	Pipe	--	--	1
22	B06	Cassotto	Organ	Pipe	--	--	1
23	B07	Tango Accordion 2	Organ	Pipe	--	--	1
24	B08	Vibraphone	CPerc	Malet	--	--	1
25	B09	Vibraphone Soft	CPerc	Malet	--	--	1
26	B10	Tubular Bell 2	CPerc	Bell	--	--	1
27	B11	Real Timpani AF2 Mfl	CPerc	Malet	--	--	2
28	B12	1coil Clean AF1&2	Guitar	E.Cln	--	--	1
29	B13	1coil Amped Vel	Guitar	E.Cln	--	--	1
30	B14	Vintage 1coil Chorus	Guitar	E.Cln	--	--	1
31	B15	Surfin' 60s 1coil	Guitar	E.Cln	--	--	1
32	B16	Breakback Mountain	Guitar	E.Dst	--	--	1
33	C01	Grunged Up	Guitar	E.Dst	--	--	4
34	C02	Jazz Clean AF1&2	Guitar	E.Cln	--	--	1
35	C03	Arched Top	Guitar	E.Cln	--	--	1
36	C04	Jazz Blues	Guitar	E.Cln	--	--	1
37	C05	Round Wound Finger	Bass	EBass	--	--	1
38	C06	Tube Finger Bass	Bass	EBass	--	--	1
39	C07	Slightly Grunged	Bass	EBass	--	--	1
40	C08	Prec Pick	Bass	EBass	--	--	1
41	C09	Pick Amp	Bass	EBass	--	--	1
42	C10	Universal AF1&2	Bass	SynBs	--	--	1
43	C11	Analog Bullet Bass	Bass	SynBs	--	--	3
44	C12	Analog Perc Bass	Bass	SynBs	--	--	3
45	C13	Analog Step Bass	Bass	SynBs	--	--	3
46	C14	Short Buzz AF1&2	Bass	Arp	--	--	3
47	C15	Bass Machine AF1	Bass	Arp	--	--	1
48	C16	Deep Ramp AF1&2	Bass	Arp	--	--	1
49	D01	Section Strings 1	String	Ensem	--	--	5
50	D02	Section Strings 2	String	Ensem	--	--	2
51	D03	Section Strings 3	String	Ensem	--	--	4
52	D04	Section Strings 4	String	Ensem	--	--	4
53	D05	Tremolo Section	String	Ensem	--	--	2
54	D06	Pizzicato Vel	String	Pizz	--	--	2
55	D07	Orchestra Harp	String	Pizz	--	--	2
56	D08	Harp Ambient	String	Pizz	--	--	2
57	D09	Gleaming Pad AF1&2	String	Synth	Pads	Analg	2
58	D10	Fat PWM Synth Vel	String	Synth	Pads	Analg	2
59	D11	Vintage Polystrings	String	Synth	Pads	Analg	3
60	D12	Soft Trumpet Legato	Brass	Solo	--	--	1
61	D13	Trumpet Vibrato	Brass	Solo	--	--	1
62	D14	Trumpet Shake Vel	Brass	Solo	--	--	1
63	D15	French Horn Section2	Brass	Orche	--	--	2
64	D16	Flugelhorn	Brass	Solo	--	--	1

Number		Voice Name	Category 1		Category 2		Element
			Main	Sub	Main	Sub	
65	E01	Jazz Brass Section	Brass	BrsEn	--	--	5
66	E02	Ob Syncomp	Brass	Synth	SyCmp	Analg	2
67	E03	Tacky Brass AF1&2	Brass	Synth	SyCmp	Analg	2
68	E04	Mellow Soprano	SaxWW	Sax	--	--	1
69	E05	Alto Accent Legato	SaxWW	Sax	--	--	1
70	E06	Tenor Max	SaxWW	Sax	--	--	1
71	E07	Soft TenorSax Legato	SaxWW	Sax	--	--	1
72	E08	Piccolo Legato	SaxWW	Flute	--	--	2
73	E09	Bizz AF2	SynLd	Arp	--	--	2
74	E10	The Bitch AT AF1&2	SynLd	Arp	--	--	3
75	E11	Mellow Swell AF1&2	Pads	Warm	M.EFX	Ambie	4
76	E12	Frozen Glasspad	Pads	Warm	M.EFX	Ambie	4
77	E13	Lunar Eclipse AF1&2	Pads	Brite	M.EFX	Ambie	4
78	E14	Melting Steel AF1&2	Pads	Choir	M.EFX	Arp	2
79	E15	Prayer Call	Pads	Choir	M.EFX	Ambie	3
80	E16	Bass n' Gate	Pads	Arp	Bass	Arp	2
81	F01	PWM Stabs	SyCmp	Analg	Brass	Synth	2
82	F02	Queen of Pop AF1&2	SyCmp	Analg	Pads	Brite	4
83	F03	Multi Bell	SyCmp	Arp	CPerc	Arp	4
84	F04	Acid 'n Space AF1&2	SyCmp	Arp	Pads	Warm	2
85	F05	Middle Ear AF1&2	SyCmp	Arp	--	--	3
86	F06	Badger AF1&2	SyCmp	Arp	--	--	1
87	F07	Voodoo Wah	SyCmp	Arp	--	--	2
88	F08	Jumping Wheel AF1&2	SyCmp	Arp	--	--	1
89	F09	Devils Wah AF1&2	SyCmp	Arp	--	--	1
90	F10	Horizons AF1&2	SyCmp	Arp	--	--	1
91	F11	Hypnotic AF1&2	SyCmp	Arp	--	--	1
92	F12	Airy Buzz AF1&2	SyCmp	Arp	--	--	1
93	F13	TranciousStepz AF1&2	SyCmp	Arp	--	--	4
94	F14	Trilogy AF1&2	SyCmp	Arp	--	--	2
95	F15	PWM Picks AF1&2	SyCmp	Arp	--	--	4
96	F16	VariChord AT AF1&2	SyCmp	Arp	--	--	1
97	G01	Voxdance AT AF1&2	SyCmp	Arp	--	--	4
98	G02	Spacewave Dancer	S.EFX	Arp	--	--	7
99	G03	Berimbau Ookawaton	M.EFX	Arp	Dr/Pc	Arp	6
100	G04	Club Telemetrix	M.EFX	Arp	--	--	3
101	G05	Venusian Rhumba	M.EFX	Arp	Dr/Pc	Arp	1
102	G06	Dripping Quarks	M.EFX	Ambie	Pads	Warm	3
103	G07	Undulator	M.EFX	Ambie	--	--	4
104	G08	Expanse	M.EFX	Ambie	--	--	4
105	G09	Deep Motion AF1&2	M.EFX	Ambie	--	--	4
106	G10	Metallic Airstabs	M.EFX	Ambie	--	--	2
107	G11	Descendant	M.EFX	Ambie	--	--	4
108	G12	Angel in Love	M.EFX	Arp	--	--	4
109	G13	Berlin Dreamz	M.EFX	Arp	Pads	Warm	2
110	G14	Complexions AF1&2	M.EFX	Arp	Pads	Brite	3
111	G15	Crazy Groove AF1&2	M.EFX	Arp	--	--	2
112	G16	Da Thumperz	M.EFX	Arp	--	--	6
113	H01	Meister Chilla	M.EFX	Arp	Dr/Pc	Arp	3
114	H02	X-Generator AF1&2	M.EFX	Move	S.EFX	Move	2
115	H03	GlaringMessage AF1&2	M.EFX	Arp	--	--	5
116	H04	Sitar 2	Ethnc	Pluk	--	--	2
117	H05	India Harmonium	Ethnc	--	Organ	Pipe	5
118	H06	Berimbau	Ethnc	Struk	--	--	1
119	H07	Banjo 2	Ethnc	Pluk	--	--	2
120	H08	Nu Orc Percussion	Dr/Pc	Perc	--	--	2
121	H09	8Z Cajon	Dr/Pc	Arp	Ethnc	Arp	2
122	H10	8Z Djembe	Dr/Pc	Arp	Ethnc	Arp	1
123	H11	8Z Static	Dr/Pc	Arp	--	--	2
124	H12	8Z RX11	Dr/Pc	Arp	--	--	1
125	H13	8Z Trance Basics 2	Dr/Pc	Arp	--	--	1
126	H14	8Z Tom Heartz	Dr/Pc	Arp	--	--	2
127	H15	Mega 1coil Old R&R	Guitar	E.Cln	Guitar	Arp	1
128	H16	Mega Jazz Guitar	Guitar	E.Cln	Guitar	Arp	1

USR 2 (MSB=63, LSB=9)
USR 3 (MSB=63, LSB=10)
USR 4 (MSB=63, LSB=11)

Any of the Preset Voices is pre-stored to each voice number of the User Banks.

Drum Voice List

Drum Voice Name List

Preset (MSB=63, LSB=32)

Pre No.	Voice Name	
1	Power Standard Kit 1	A
2	Power Standard Kit 2	A
3	Hyper Standard Kit	A
4	Dry Standard Kit	A
5	Modern Rock Kit	A
6	Rock Stereo Kit 1	A
7	Rock Stereo Kit 2	A
8	Nu Hip Hop Kit 1	A
9	Nu Hip Hop Kit 2	A
10	Hip Hop Kit 1	A
11	Hip Hop Kit 2	A
12	Hip Hop Kit 3	A
13	Hip Hop Kit 4	A
14	Hip Stick Kit 1	A
15	Hip Stick Kit 2	A
16	R&B Kit 1	A
17	R&B Kit 2	A
18	R&B Kit 3	A
19	Trance Kit	A
20	Psychedelic Kit	A
21	Chill Out Kit	A
22	Brush Kit	A
23	Jazz Kit	A
24	Pop Latin Kit	A
25	Analog T9 Kit	A
26	Analog T8 Kit	A
27	Tekno Kit	A
28	House Kit 1	A
29	House Kit 2	A
30	House Compressed Kit	A
31	Big Kit	A
32	Break Kit	A
33	Drum'n'Bass Kit	A
34	Acid Kit	A
35	Jungle Kit	A
36	Electric Kit	A
37	Human Kit	A
38	Hard Kit	A
39	Distorted Kit	A
40	Ambient Kit	A
41	Garage Kit	B
42	Synth Pop Kit	B
43	Orchestra Kit	B
44	Drum Machines Kit	B
45	Rock Multiple Kits	B
46	HipHop Multiple Kits	B
47	Percussion Kit	C
48	Latin Percussion Kit	C
49	Guitar/Bass FX Kit	C
50	Wacko Kit	C
51	Wood Bits Kit	C
52	Metal Bits Kit	C
53	Hands Kit	C
54	Scratches	C
55	Acoustic Snares	C
56	GroupedStereo Snares	C
57	All Kicks	C
58	Dance Kicks	C
59	Arabic Mixed Kit	C
60	Belly Dance Kit	C
61	Dance Snares	C
62	Special SFXs	C
63	Synthetic Kit	C
64	SFX Kit	C

GM (MSB=127, LSB=0)

GM Drum No.	Voice Name	
1	Stereo GM Kit	A

User (MSB=63, LSB=40)

User No.	Voice Name	
1	Maple Custom Kit	A
2	Oak Custom Kit	A
3	Nu Jazzy Kit	A
4	Illest Hip Hop Kit	A
5	PercussionMaster Kit	C
6	Nu Orchestra Kit	B
7	Japan Kit	C
8	Turkish Kit	C
9	Nu Hip Hop Kit 2	A
10	Hip Hop Kit 1	A
11	Hip Hop Kit 2	A
12	Hip Hop Kit 3	A
13	Hip Hop Kit 4	A
14	Hip Stick Kit 1	A
15	Hip Stick Kit 2	A
16	R&B Kit 1	A
17	R&B Kit 2	A
18	R&B Kit 3	A
19	Trance Kit	A
20	Psychedelic Kit	A
21	Chill Out Kit	A
22	Brush Kit	A
23	Jazz Kit	A
24	Pop Latin Kit	A
25	Analog T9 Kit	A
26	Analog T8 Kit	A
27	Tekno Kit	A
28	House Kit 1	A
29	House Kit 2	A
30	House Compressed Kit	A
31	Big Kit	A
32	Break Kit	A

A:
These drum kits have been specially programmed for different music styles, yet closely follow the standard instrument order of the GM kit.

B:
These original drum kits, programmed for the MOTIF XF, feature a special non-standard order for ease in playing.

C:
These original kits feature a variety of instruments and special sound effects, and are grouped according to their type.

Drum Kit Assign List

PDR 1 Power Standard Kit 1

Note	Wave Number	Wave Name
C0	2106	Claves1
C#0	3205	Sd Brush Soft St
D0	3217	Sd Brush Swir St
D#0	3208	Sd Brush Med St
E0	3220	Sd Brush SwirAtt St
F0	3201	Sd LiveRoll St
F#0	1935	Castanet1
G0	3029	Sd PowerD 1St
G#0	1933	Stick1
A0	2555	Bd PowerB 1-2St
A#0	3041	Sd PowerD 5St
B0	2546	Bd PowerA 1-2St
C1	2534	Bd Jazz1-2St
C#1	2999	Sd PowerB SSt
D1	3002	Sd PowerC 1-5St
D#1	1945	Hand Clap1 St
E1	3023	Sd PowerD 1-5St
F1	3703	Tom Power05 1-2St
F#1	3471	HH Power ClTip 1-4St
G1	3703	Tom Power05 1-2St
G#1	3511	HH Power ClPedal St
A1	3691	Tom Power04 1-2St
A#1	3515	HH Power Open EdgeSt
B1	3679	Tom Power03 1-2St
C2	3679	Tom Power03 1-2St
C#2	3867	Crash2 St
D2	3667	Tom Power01 1-2St
D#2	3907	Ride1 St
E2	3954	China1 St
F2	3935	Ride Cup1 St
F#2	1927	Tambourine1 Sw
G2	3963	Splash1 St
G#2	2110	Cowbell2
A2	3870	Crash2 RL
A#2	1940	Vibraslap1
B2	3911	Ride2 St
C3	2007	Bongo1 Hi 1Fingr 1-2
C#3	2017	Bongo1 Lo 1Fingr 1-2
D3	1974	Conga1 Hi SlpMute1-2
D#3	1968	Conga1 Hi Open 1-2
E3	1979	Conga1 Lo Open 1-2
F3	2033	Timbale1 Hi 1-3
F#3	2037	Timbale1 Lo 1-2
G3	2080	Agogo Hi
G#3	2081	Agogo Lo
A3	2059	CabasaA 1-2
A#3	2057	Maracas Slur
B3	2108	Whistle
C4	2108	Whistle
C#4	2084	Guiro Short
D4	2083	Guiro Long
D#4	2106	Claves1
E4	1939	Wood Block
F4	1939	Wood Block
F#4	2006	Cuica Hi
G4	2005	Cuica Lo
G#4	1944	Triangle Mute
A4	1943	Triangle Open
A#4	1916	ShakerA 1/3
B4	1954	Sleigh Bell1
C5	1957	Wind Chime
C#5	2718	Sd Bld St1-4
D5	2877	Sd Blues 3St
D#5	2921	Sd Hip St1-2
E5	2818	Sd Funk St1-3
F5	2738	Sd Soul St1-4
F#5	3169	Sd LdwHMono
G5	3172	Sd Heavy
G#5	2901	Sd Tight St1-4
A5	2886	Sd BluesHeart St1-3
A#5	2460	Bd Snap 1-2
B5	2469	Bd Tight 1-2
C6	2496	Bd Funk St1-2

PDR 2 Power Standard Kit 2

Note	Wave Number	Wave Name
C0	2106	Claves1
C#0	3205	Sd Brush Soft St
D0	3217	Sd Brush Swir St
D#0	3208	Sd Brush Med St
E0	3220	Sd Brush SwirAtt St
F0	3201	Sd LiveRoll St
F#0	1935	Castanet1
G0	2963	Sd PowerA 1St
G#0	1933	Stick1
A0	2555	Bd PowerB 1-2St
A#0	2975	Sd PowerA 5St
B0	2546	Bd PowerA 1-2St
C1	2534	Bd Jazz1-2St
C#1	2999	Sd PowerB SSt
D1	2978	Sd PowerB 1-5St
D#1	1945	Hand Clap1 St
E1	2957	Sd PowerA 1-5St
F1	3703	Tom Power05 1-2St
F#1	3491	HH Power ClEgde1-4St
G1	3703	Tom Power05 1-2St
G#1	3511	HH Power ClPedal St
A1	3691	Tom Power04 1-2St
A#1	3515	HH Power Open EdgeSt
B1	3679	Tom Power03 1-2St
C2	3679	Tom Power03 1-2St
C#2	3867	Crash2 St
D2	3667	Tom Power01 1-2St
D#2	3907	Ride1 St
E2	3954	China1 St
F2	3935	Ride Cup1 St
F#2	1927	Tambourine1 Sw
G2	3963	Splash1 St
G#2	2110	Cowbell2
A2	3870	Crash2 RL
A#2	1940	Vibraslap1
B2	3911	Ride2 St
C3	2007	Bongo1 Hi 1Fingr 1-2
C#3	2017	Bongo1 Lo 1Fingr 1-2
D3	1974	Conga1 Hi SlpMute1-2
D#3	1968	Conga1 Hi Open 1-2
E3	1979	Conga1 Lo Open 1-2
F3	2033	Timbale1 Hi 1-3
F#3	2037	Timbale1 Lo 1-2
G3	2080	Agogo Hi
G#3	2081	Agogo Lo
A3	2059	CabasaA 1-2
A#3	2057	Maracas Slur
B3	2108	Whistle
C4	2108	Whistle
C#4	2084	Guiro Short
D4	2083	Guiro Long
D#4	2106	Claves1
E4	1939	Wood Block
F4	1939	Wood Block
F#4	2006	Cuica Hi
G4	2005	Cuica Lo
G#4	1944	Triangle Mute
A4	1943	Triangle Open
A#4	1916	ShakerA 1/3
B4	1954	Sleigh Bell1
C5	1957	Wind Chime
C#5	2718	Sd Bld St1-4
D5	2877	Sd Blues 3St
D#5	2921	Sd Hip St1-2
E5	2818	Sd Funk St1-3
F5	2738	Sd Soul St1-4
F#5	3169	Sd LdwHMono
G5	3172	Sd Heavy
G#5	2901	Sd Tight St1-4
A5	2886	Sd BluesHeart St1-3
A#5	2460	Bd Snap 1-2
B5	2469	Bd Tight 1-2
C6	2496	Bd Funk St1-2

PDR 3 Hyper Standard Kit

Note	Wave Number	Wave Name
C0	2106	Claves1
C#0	3205	Sd Brush Soft St
D0	3217	Sd Brush Swir St
D#0	3208	Sd Brush Med St
E0	3220	Sd Brush SwirAtt St
F0	3201	Sd LiveRoll St
F#0	1935	Castanet1
G0	2804	Sd Normal 1St
G#0	1933	Stick1
A0	2517	Bd Funk Son St
A#0	2836	Sd Basic St1-3
B0	2461	Bd Snap 1
C1	2511	Bd H Son St
C#1	3190	Sd Closed Rim St
D1	2851	Sd SonA St1-4
D#1	2423	Clap T9
E1	2901	Sd Tight St1-4
F1	3651	Tom Floor St
F#1	3420	HH Closed Foot St
G1	3651	Tom Floor St
G#1	3424	HH Half Open2 St
A1	3647	Tom Low St
A#1	3428	HH Open2 St
B1	3647	Tom Low St
C2	3643	Tom Mid St
C#2	3870	Crash2 RL
D2	3639	Tom Hi St
D#2	3907	Ride1 St
E2	3954	China1 St
F2	3935	Ride Cup1 St
F#2	1927	Tambourine1 Sw
G2	3963	Splash1 St
G#2	2110	Cowbell2
A2	3870	Crash2 RL
A#2	1940	Vibraslap1
B2	3910	Ride1 RL
C3	2007	Bongo1 Hi 1Fingr 1-2
C#3	2020	Bongo1 Lo 3Fingr 1-2
D3	1966	Conga1 Hi Tip
D#3	1970	Conga1 Hi Open 2
E3	2001	Tumba Open
F3	2033	Timbale1 Hi 1-3
F#3	2037	Timbale1 Lo 1-2
G3	2080	Agogo Hi
G#3	2081	Agogo Lo
A3	2059	CabasaA 1-2
A#3	2057	Maracas Slur
B3	2108	Whistle
C4	2108	Whistle
C#4	2084	Guiro Short
D4	2083	Guiro Long
D#4	2106	Claves1
E4	1939	Wood Block
F4	1939	Wood Block
F#4	2006	Cuica Hi
G4	2005	Cuica Lo
G#4	1944	Triangle Mute
A4	1943	Triangle Open
A#4	1917	ShakerA 1
B4	1954	Sleigh Bell1
C5	1957	Wind Chime
C#5	2718	Sd Bld St1-4
D5	2871	Sd Blues St1-3
D#5	2894	Sd BluesHeart R1-3
E5	2921	Sd Hip St1-2
F5	2798	Sd Normal St1-4
F#5	3169	Sd LdwHMono
G5	2739	Sd Soul St1-3
G#5	3172	Sd Heavy
A5	2822	Sd Funk 1St
A#5	2488	Bd Normal 1St
B5	2517	Bd Funk Son St
C6	2460	Bd Snap 1-2

PDR 4 Dry Standard Kit

Note	Wave Number	Wave Name
C0	2106	Claves1
C#0	3205	Sd Brush Soft St
D0	3217	Sd Brush Swir St
D#0	3208	Sd Brush Med St
E0	3220	Sd Brush SwirAtt St
F0	3201	Sd LiveRoll St
F#0	1935	Castanet1
G0	2804	Sd Normal 1St
G#0	1933	Stick1
A0	2496	Bd Funk St1-2
A#0	2838	Sd Basic St2-3
B0	2505	Bd High St
C1	2487	Bd Normal St1-2
C#1	3190	Sd Closed Rim St
D1	2798	Sd Normal St1-4
D#1	2423	Clap T9
E1	2837	Sd Basic St1-2
F1	3651	Tom Floor St
F#1	3372	HH Closed 1-4St
G1	3651	Tom Floor St
G#1	3395	HH Pedal 3 St
A1	3647	Tom Low St
A#1	3408	HH Open 1-2St
B1	3647	Tom Low St
C2	3643	Tom Mid St
C#2	3870	Crash2 RL
D2	3639	Tom Hi St
D#2	3907	Ride1 St
E2	3954	China1 St
F2	3935	Ride Cup1 St
F#2	1927	Tambourine1 Sw
G2	3963	Splash1 St
G#2	2110	Cowbell2
A2	3870	Crash2 RL
A#2	1940	Vibraslap1
B2	3910	Ride1 RL
C3	2007	Bongo1 Hi 1Fingr 1-2
C#3	2020	Bongo1 Lo 3Fingr 1-2
D3	1972	Conga1 Hi Slap Open
D#3	1970	Conga1 Hi Open 2
E3	2001	Tumba Open
F3	2033	Timbale1 Hi 1-3
F#3	2037	Timbale1 Lo 1-2
G3	2080	Agogo Hi
G#3	2081	Agogo Lo
A3	2059	CabasaA 1-2
A#3	2057	Maracas Slur
B3	2108	Whistle
C4	2108	Whistle
C#4	2084	Guiro Short
D4	2083	Guiro Long
D#4	2106	Claves1
E4	1939	Wood Block
F4	1939	Wood Block
F#4	2006	Cuica Hi
G4	2005	Cuica Lo
G#4	1944	Triangle Mute
A4	1943	Triangle Open
A#4	1917	ShakerA 1
B4	1954	Sleigh Bell1
C5	1957	Wind Chime
C#5	2718	Sd Bld St1-4
D5	2878	Sd Blues L1-3
D#5	2921	Sd Hip St1-2
E5	2818	Sd Funk St1-3
F5	2740	Sd Soul St2-4
F#5	3169	Sd LdwHMono
G5	3172	Sd Heavy
G#5	2901	Sd Tight St1-4
A5	2889	Sd BluesHeart St1/3
A#5	2460	Bd Snap 1-2
B5	2469	Bd Tight 1-2
C6	2496	Bd Funk St1-2

PDR 5 Modern Rock Kit

Note	Wave Number	Wave Name
C0	2106	Claves1
C#0	3205	Sd Brush Soft St
D0	3217	Sd Brush Swir St
D#0	3208	Sd Brush Med St
E0	3220	Sd Brush SwirAtt St
F0	3201	Sd LiveRoll St
F#0	1935	Castanet1
G0	2932	Sd Rock Open1 R
G#0	1933	Stick1
A0	2531	Bd Room1
A#0	2787	Sd Rng St4
B0	2540	Bd Jazz2St
C1	2533	Bd Room3
C#1	3177	Sd Rock Stick2 St
D1	2758	Sd Strong St1-4
D#1	2447	HipHop Clap6
E1	2957	Sd PowerA 1-5St
F1	3651	Tom Floor St
F#1	3432	HH Closed Rock Sw St
G1	3647	Tom Low St
G#1	3460	HH Half Open Rock St
A1	3647	Tom Low St
A#1	3458	HH Open Rock St
B1	3643	Tom Mid St
C2	3643	Tom Mid St
C#2	3866	Crash1 RL
D2	3639	Tom Hi St
D#2	3911	Ride2 St
E2	3954	China1 St
F2	3947	Ride Cup2 St
F#2	1927	Tambourine1 Sw
G2	3963	Splash1 St
G#2	2110	Cowbell2
A2	3863	Crash1 St
A#2	1940	Vibraslap1
B2	3938	Ride Cup1 RL
C3	2007	Bongo1 Hi 1Fingr 1-2
C#3	2020	Bongo1 Lo 3Fingr 1-2
D3	1966	Conga1 Hi Tip
D#3	1970	Conga1 Hi Open 2
E3	2001	Tumba Open
F3	2033	Timbale1 Hi 1-3
F#3	2037	Timbale1 Lo 1-2
G3	2080	Agogo Hi
G#3	2081	Agogo Lo
A3	2059	CabasaA 1-2
A#3	2057	Maracas Slur
B3	2108	Whistle
C4	2108	Whistle
C#4	2084	Guiro Short
D4	2083	Guiro Long
D#4	2106	Claves1
E4	1939	Wood Block
F4	1939	Wood Block
F#4	2006	Cuica Hi
G4	2005	Cuica Lo
G#4	1944	Triangle Mute
A4	1943	Triangle Open
A#4	1917	ShakerA 1
B4	1954	Sleigh Bell1
C5	1957	Wind Chime
C#5	2874	Sd Blues St1/3
D5	2901	Sd Tight St1-4
D#5	2894	Sd BluesHeart R1-3
E5	2912	Sd Tight R1-4
F5	2508	Bd Low St
F#5	3017	Sd PowerC 4St
G5	2666	Bd R&B1
G#5	2978	Sd PowerB 1-5St
A5	2531	Bd Room1
A#5	2957	Sd PowerA 1-5St
B5	2517	Bd Funk Son St
C6	2532	Bd Room2

PDR 6 Rock Stereo Kit 1

Note	Wave Number	Wave Name
C0	2441	Analog Click
C#0	3205	Sd Brush Soft St
D0	3217	Sd Brush Swir St
D#0	3208	Sd Brush Med St
E0	3220	Sd Brush SwirAtt St
F0	3195	Sd RockRoll St
F#0	1935	Castanet1
G0	2939	Sd Rock Open2 St
G#0	1933	Stick1
A0	2533	Bd Room3
A#0	2936	Sd Rock Rim1 St
B0	2523	Bd Rock2 St
C1	2520	Bd Rock1 St
C#1	3174	Sd Rock Stick1 St
D1	2930	Sd Rock Open1 St
D#1	2444	HipHop Clap3
E1	2933	Sd Rock Mute1 St
F1	3663	Tom Rock Low St
F#1	3432	HH Closed Rock Sw St
G1	3663	Tom Rock Low St
G#1	3444	HH Pedal Rock Sw St
A1	3659	Tom Rock Mid St
A#1	3456	HH Open Rock Sw St
B1	3659	Tom Rock Mid St
C2	3655	Tom Rock Hi St
C#2	3866	Crash1 RL
D2	3655	Tom Rock Hi St
D#2	3911	Ride2 St
E2	3954	China1 St
F2	3947	Ride Cup2 St
F#2	2433	Tambourine RX5
G2	3963	Splash1 St
G#2	2109	Cowbell1
A2	3863	Crash1 St
A#2	1940	Vibraslap1
B2	3914	Ride2 RL
C3	2007	Bongo1 Hi 1Fingr 1-2
C#3	2020	Bongo1 Lo 3Fingr 1-2
D3	1966	Conga1 Hi Tip
D#3	1970	Conga1 Hi Open 2
E3	2001	Tumba Open
F3	2033	Timbale1 Hi 1-3
F#3	2037	Timbale1 Lo 1-2
G3	2080	Agogo Hi
G#3	2081	Agogo Lo
A3	2059	CabasaA 1-2
A#3	2057	Maracas Slur
B3	2108	Whistle
C4	2108	Whistle
C#4	2084	Guiro Short
D4	2083	Guiro Long
D#4	2106	Claves1
E4	1939	Wood Block
F4	1939	Wood Block
F#4	2006	Cuica Hi
G4	2005	Cuica Lo
G#4	1944	Triangle Mute
A4	1943	Triangle Open
A#4	1917	ShakerA 1
B4	1954	Sleigh Bell1
C5	1957	Wind Chime
C#5	2948	Sd Rock Flam St
D5	2939	Sd Rock Open2 St
D#5	2945	Sd Rock Rim2 St
E5	2942	Sd Rock Mute2 St
F5	2497	Bd Funk 1St
F#5	3198	Sd RockRollD St
G5	2511	Bd H Son St
G#5	2901	Sd Tight St1-4
A5	2517	Bd Funk Son St
A#5	2859	Sd SonA 3St
B5	2500	Bd Funk R1-2
C6	2511	Bd H Son St

PDR 7 Rock Stereo Kit 2

Note	Wave Number	Wave Name
C0	2441	Analog Click
C#0	3205	Sd Brush Soft St
D0	3217	Sd Brush Swir St
D#0	3208	Sd Brush Med St
E0	3220	Sd Brush SwirAtt St
F0	3195	Sd RockRoll St
F#0	1935	Castanet1
G0	2939	Sd Rock Open2 St
G#0	1933	Stick1
A0	2531	Bd Room1
A#0	2945	Sd Rock Rim2 St
B0	2481	Bd Ambience L1-2
C1	2523	Bd Rock2 St
C#1	3177	Sd Rock Stick2 St
D1	2939	Sd Rock Open2 St
D#1	1945	Hand Clap1 St
E1	2942	Sd Rock Mute2 St
F1	3663	Tom Rock Low St
F#1	3448	HH Closed Rock 2St
G1	3663	Tom Rock Low St
G#1	3460	HH Half Open Rock St
A1	3659	Tom Rock Mid St
A#1	3458	HH Open Rock St
B1	3659	Tom Rock Mid St
C2	3655	Tom Rock Hi St
C#2	3867	Crash2 St
D2	3655	Tom Rock Hi St
D#2	3911	Ride2 St
E2	3954	China1 St
F2	3947	Ride Cup2 St
F#2	2433	Tambourine RX5
G2	3963	Splash1 St
G#2	2109	Cowbell1
A2	3870	Crash2 RL
A#2	1940	Vibraslap1
B2	3914	Ride2 RL
C3	2007	Bongo1 Hi 1Fingr 1-2
C#3	2020	Bongo1 Lo 3Fingr 1-2
D3	1966	Conga1 Hi Tip
D#3	1970	Conga1 Hi Open 2
E3	2001	Tumba Open
F3	2033	Timbale1 Hi 1-3
F#3	2037	Timbale1 Lo 1-2
G3	2080	Agogo Hi
G#3	2081	Agogo Lo
A3	2059	CabasaA 1-2
A#3	2057	Maracas Slur
B3	2108	Whistle
C4	2108	Whistle
C#4	2084	Guiro Short
D4	2083	Guiro Long
D#4	2106	Claves1
E4	1939	Wood Block
F4	1939	Wood Block
F#4	2006	Cuica Hi
G4	2005	Cuica Lo
G#4	1944	Triangle Mute
A4	1943	Triangle Open
A#4	1917	ShakerA 1
B4	1954	Sleigh Bell1
C5	1957	Wind Chime
C#5	2948	Sd Rock Flam St
D5	2930	Sd Rock Open1 St
D#5	2936	Sd Rock Rim1 St
E5	2933	Sd Rock Mute1 St
F5	2520	Bd Rock1 St
F#5	3198	Sd RockRollD St
G5	2498	Bd Funk 2St
G#5	2901	Sd Tight St1-4
A5	2505	Bd High St
A#5	2860	Sd SonA 4St
B5	2514	Bd L Son St
C6	2520	Bd Rock1 St

PDR 8 Nu Hip Hop Kit 1

Note	Wave Number	Wave Name
C0	2706	Bd HipHop2
C#0	2061	CabasaA 2
D0	3356	Sd HipHop9
D#0	1754	Scratch Lo R
E0	1759	Scratch Vo F
F0	3198	Sd RockRollD St
F#0	2106	Claves1
G0	3353	Sd HipHop5
G#0	3368	Sd HipHop Rim3
A0	2712	Bd HipHop8
A#0	3371	Sd HipHop Rim6
B0	2713	Bd HipHop9
C1	2709	Bd HipHop5
C#1	3367	Sd HipHop Rim2
D1	3358	Sd HipHop11
D#1	2443	HipHop Clap2
E1	3351	Sd HipHop2
F1	3652	Tom Floor L
F#1	3629	HH Closed Hip
G1	3648	Tom Low L
G#1	3630	HH Pedal Hip
A1	3645	Tom Mid R
A#1	3631	HH Open Hip
B1	3641	Tom Hi R
C2	3641	Tom Hi R
C#2	3872	Crash4
D2	3641	Tom Hi R
D#2	3912	Ride2 L
E2	3868	Crash2 L
F2	3951	Ride Mono
F#2	1929	Tambourine1 Hit
G2	3902	Hand Cymbal Open L
G#2	2117	Mambo Bell Body
A2	3956	China1 R
A#2	1952	Handbell L
B2	3953	Ride Cup Mono2
C3	1972	Conga1 Hi Slap Open
C#3	1980	Conga1 Lo Open 1
D3	1977	Conga1 Lo Tip
D#3	1983	Conga1 Lo Slap Open
E3	1981	Conga1 Lo Open 2
F3	2708	Bd HipHop4
F#3	2444	HipHop Clap3
G3	2080	Agogo Hi
G#3	2081	Agogo Lo
A3	1918	ShakerA 2
A#3	1917	ShakerA 1
B3	2714	Bd HipHop10
C4	2710	Bd HipHop6
C#4	3369	Sd HipHop Rim4
D4	3354	Sd HipHop6
D#4	2458	HipHop Snap1
E4	2714	Bd HipHop10
F4	3355	Sd HipHop7
F#4	2442	HipHop Clap1
G4	2051	Paila L
G#4	1944	Triangle Mute
A4	1943	Triangle Open
A#4	1927	Tambourine1 Sw
B4	1918	ShakerA 2
C5	2712	Bd HipHop8
C#5	2423	Clap T9
D5	3293	Sd T8-1
D#5	3293	Sd T8-1
E5	3296	Sd T8-4
F5	3856	Tom T8
F#5	3614	HH Closed T8-2
G5	3856	Tom T8
G#5	3614	HH Closed T8-2
A5	3856	Tom T8
A#5	3615	HH Open T8-2
B5	3856	Tom T8
C6	3972	Crash T8

PDR 9 Nu Hip Hop Kit 2

Note	Wave Number	Wave Name
C0	2707	Bd HipHop3
C#0	1727	Hi Q2
D0	1764	Scratch Hip2
D#0	1758	Scratch Sd R
E0	1760	Scratch Vo R
F0	3331	Sd Break Roll
F#0	3292	Sd T9Rim
G0	3351	Sd HipHop2
G#0	3298	Sd T8 Rim
A0	2713	Bd HipHop9
A#0	3366	Sd HipHop Rim1
B0	2710	Bd HipHop6
C1	2709	Bd HipHop5
C#1	3367	Sd HipHop Rim2
D1	3350	Sd HipHop1
D#1	2447	HipHop Clap6
E1	3356	Sd HipHop9
F1	3855	Tom T9 Lo
F#1	3629	HH Closed Hip
G1	3855	Tom T9 Lo
G#1	3630	HH Pedal Hip
A1	3854	Tom T9 Hi
A#1	3631	HH Open Hip
B1	3854	Tom T9 Hi
C2	3856	Tom T8
C#2	3871	Crash3
D2	3856	Tom T8
D#2	3975	Ride T9
E2	3975	Ride T9
F2	3893	Crash Brush Cup St
F#2	2433	Tambourine RX5
G2	3973	Crash Syn
G#2	2430	Cowbell AnCR
A2	3971	Crash T9
A#2	2089	MetalGuiro Long
B2	3951	Ride Mono
C3	2096	Cajon1 Tip 1-2
C#3	2024	Bongo1 Lo Tip
D3	2078	Tmbourim Finger
D#3	2071	Tumbo 2
E3	2004	Tumba Heel
F3	2052	Paila H
F#3	2051	Paila L
G3	2428	Cowbell T8
G#3	2430	Cowbell AnCR
A3	2153	Shekere Up
A#3	2068	Caxixi 1
B3	1683	Grain2 St
C4	1684	Grain2 L
C#4	2097	Cajon1 Tip 1
D4	2448	HipHop Clap7
D#4	2106	Claves1
E4	1939	Wood Block
F4	3369	Sd HipHop Rim4
F#4	2458	HipHop Snap1
G4	2459	HipHop Snap2
G#4	2440	Electric Triangle
A4	1943	Triangle Open
A#4	1917	ShakerA 1
B4	2089	MetalGuiro Long
C5	1957	Wind Chime
C#5	3369	Sd HipHop Rim4
D5	3293	Sd T8-1
D#5	3294	Sd T8-2
E5	3296	Sd T8-4
F5	3856	Tom T8
F#5	3614	HH Closed T8-2
G5	3856	Tom T8
G#5	3614	HH Closed T8-2
A5	3856	Tom T8
A#5	3615	HH Open T8-2
B5	3856	Tom T8
C6	2456	HipHop Flex1

PDR 10 Hip Hop Kit 1

Note	Wave Number	Wave Name
C0	3181	Sd Hip Stick2
C#0	1728	Vox Hit Rev
D0	1735	TurnTable
D#0	1598	Hit Brass
E0	1758	Scratch Sd R
F0	3203	Sd LiveRoll R
F#0	2439	Claves T8
G0	2929	Sd Hip 2R
G#0	3187	Sd Hip Stick6 R
A0	2713	Bd HipHop9
A#0	3340	Sd Garg L
B0	2653	Bd T8-3
C1	2644	Bd T9-1
C#1	3368	Sd HipHop Rim3
D1	3357	Sd HipHop10
D#1	2447	HipHop Clap6
E1	3350	Sd HipHop1
F1	3856	Tom T8
F#1	3612	HH Closed T8-1
G1	3856	Tom T8
G#1	3613	HH Open T8-1
A1	3856	Tom T8
A#1	3613	HH Open T8-1
B1	3856	Tom T8
C2	3856	Tom T8
C#2	3872	Crash4
D2	3856	Tom T8
D#2	3941	Ride Brush1 R
E2	3972	Crash T8
F2	3975	Ride T9
F#2	2433	Tambourine RX5
G2	3965	Splash1 R
G#2	2117	Mambo Bell Body
A2	3971	Crash T9
A#2	1940	Vibraslap1
B2	3975	Ride T9
C3	2007	Bongo1 Hi 1Fingr 1-2
C#3	2020	Bongo1 Lo 3Fingr 1-2
D3	1966	Conga1 Hi Tip
D#3	1970	Conga1 Hi Open 2
E3	2001	Tumba Open
F3	2033	Timbale1 Hi 1-3
F#3	2037	Timbale1 Lo 1-2
G3	2080	Agogo Hi
G#3	2081	Agogo Lo
A3	2059	CabasaA 1-2
A#3	2057	Maracas Slur
B3	2108	Whistle
C4	2108	Whistle
C#4	2084	Guiro Short
D4	2083	Guiro Long
D#4	2106	Claves1
E4	1939	Wood Block
F4	1939	Wood Block
F#4	2006	Cuica Hi
G4	2005	Cuica Lo
G#4	1944	Triangle Mute
A4	1943	Triangle Open
A#4	1917	ShakerA 1
B4	1954	Sleigh Bell1
C5	1957	Wind Chime
C#5	3189	Sd Hip Stick8
D5	3309	Sd Jungle3
D#5	1947	Hand Clap1 R
E5	3326	Sd Hip Rim5
F5	1748	Scratch H
F#5	1749	Scratch L
G5	1750	Scratch Down
G#5	1752	Scratch Hi R
A5	1755	Scratch Bd F
A#5	1767	Scratch Combi
B5	1760	Scratch Vo R
C6	2671	Bd Break2

PDR 11 Hip Hop Kit 2

Note	Wave Number	Wave Name
C0	2653	Bd T8-3
C#0	3298	Sd T8 Rim
D0	3318	Sd Hip1
D#0	2423	Clap T9
E0	3343	Sd Syn
F0	3203	Sd LiveRoll R
F#0	3183	Sd Hip Stick4
G0	3351	Sd HipHop2
G#0	3371	Sd HipHop Rim6
A0	2668	Bd Hip Deep
A#0	3316	Sd R&B1 Rim
B0	2672	Bd Break Heavy
C1	2668	Bd Hip Deep
C#1	3367	Sd HipHop Rim2
D1	3320	Sd Hip3
D#1	1945	Hand Clap1 St
E1	3348	Sd Lo-Fi
F1	3653	Tom Floor R
F#1	3632	HH Closed Lo-Fi
G1	3648	Tom Low L
G#1	3621	HH Closed Break
A1	3648	Tom Low L
A#1	3633	HH Open Lo-Fi
B1	3648	Tom Low L
C2	3640	Tom Hi L
C#2	3871	Crash3
D2	3640	Tom Hi L
D#2	3975	Ride T9
E2	3958	China2
F2	3952	Ride Cup Mono
F#2	2433	Tambourine RX5
G2	3871	Crash3
G#2	2429	Cowbell RX11
A2	3869	Crash2 R
A#2	2428	Cowbell T8
B2	3975	Ride T9
C3	2007	Bongo1 Hi 1Fingr 1-2
C#3	2020	Bongo1 Lo 3Fingr 1-2
D3	1966	Conga1 Hi Tip
D#3	1972	Conga1 Hi Slap Open
E3	1970	Conga1 Hi Open 2
F3	1659	Radio Noise
F#3	1659	Radio Noise
G3	2081	Agogo Lo
G#3	2081	Agogo Lo
A3	2060	CabasaA 1
A#3	2437	MaracasT8
B3	1732	FxGun2
C4	1731	FxGun1
C#4	1762	Scratch Spin
D4	1761	Scratch Stop
D#4	2439	Claves T8
E4	1737	Door Squeak
F4	1727	Hi Q2
F#4	1755	Scratch Bd F
G4	1756	Scratch Bd R
G#4	1944	Triangle Mute
A4	1943	Triangle Open
A#4	2432	Analog Shaker
B4	1929	Tambourine1 Hit
C5	1957	Wind Chime
C#5	3306	Sd Human2
D5	3331	Sd Break Roll
D#5	1601	Stab Hard
E5	3307	Sd Jungle1
F5	2520	Bd Rock1 St
F#5	1750	Scratch Down
G5	2178	Wa Taiko
G#5	1596	HH Hit
A5	1602	Stab Organ2
A#5	1554	Sonar1
B5	1735	TurnTable
C6	1736	Police

PDR 12 Hip Hop Kit 3

Note	Wave Number	Wave Name
C0	3298	Sd T8 Rim
C#0	1728	Vox Hit Rev
D0	1735	TurnTable
D#0	1601	Stab Hard
E0	1760	Scratch Vo R
F0	3204	Sd Roll Mono
F#0	2439	Claves T8
G0	2927	Sd Hip 1R
G#0	3183	Sd Hip Stick4
A0	2655	Bd AnCR
A#0	3324	Sd Hip Rim3
B0	2646	Bd T9-3
C1	2668	Bd Hip Deep
C#1	3184	Sd Hip Stick5
D1	3321	Sd Hip Gate
D#1	2447	HipHop Clap6
E1	3348	Sd Lo-Fi
F1	3856	Tom T8
F#1	3629	HH Closed Hip
G1	3856	Tom T8
G#1	3630	HH Pedal Hip
A1	3856	Tom T8
A#1	3631	HH Open Hip
B1	3856	Tom T8
C2	3856	Tom T8
C#2	3872	Crash4
D2	3856	Tom T8
D#2	3913	Ride2 R
E2	3972	Crash T8
F2	3975	Ride T9
F#2	2433	Tambourine RX5
G2	3965	Splash1 R
G#2	2117	Mambo Bell Body
A2	3971	Crash T9
A#2	1940	Vibraslap1
B2	3975	Ride T9
C3	2007	Bongo1 Hi 1Fingr 1-2
C#3	2020	Bongo1 Lo 3Fingr 1-2
D3	1966	Conga1 Hi Tip
D#3	1972	Conga1 Hi Slap Open
E3	1970	Conga1 Hi Open 2
F3	2033	Timbale1 Hi 1-3
F#3	2037	Timbale1 Lo 1-2
G3	2080	Agogo Hi
G#3	2081	Agogo Lo
A3	1923	Shaker Hip1
A#3	2057	Maracas Slur
B3	2108	Whistle
C4	2108	Whistle
C#4	2084	Guiro Short
D4	2083	Guiro Long
D#4	2106	Claves1
E4	1939	Wood Block
F4	1939	Wood Block
F#4	2006	Cuica Hi
G4	2005	Cuica Lo
G#4	1944	Triangle Mute
A4	1943	Triangle Open
A#4	1917	ShakerA 1
B4	1954	Sleigh Bell1
C5	1957	Wind Chime
C#5	3180	Sd Hip Stick1
D5	3307	Sd Jungle1
D#5	1947	Hand Clap1 R
E5	3330	Sd Break Heavy
F5	1749	Scratch L
F#5	1750	Scratch Down
G5	1751	Scratch Hi F
G#5	1753	Scratch Lo F
A5	1754	Scratch Lo R
A#5	1755	Scratch Bd F
B5	1756	Scratch Bd R
C6	2672	Bd Break Heavy

PDR 13 Hip Hop Kit 4

Note	Wave Number	Wave Name
C0	3180	Sd Hip Stick1
C#0	1726	Hi Q1
D0	1735	TurnTable
D#0	1604	Hit Uhh
E0	1761	Scratch Stop
F0	3202	Sd LiveRoll L
F#0	2439	Claves T8
G0	3338	Sd Cut
G#0	3176	Sd Rock Stick1 R
A0	2645	Bd T9-2
A#0	3322	Sd Hip Rim1
B0	2667	Bd R&B2
C1	2669	Bd Break Deep
C#1	3194	Sd Closed Rim3
D1	3323	Sd Hip Rim2
D#1	2445	HipHop Clap4
E1	3315	Sd R&B1
F1	2427	Conga T8
F#1	3612	HH Closed T8-1
G1	2427	Conga T8
G#1	3614	HH Closed T8-2
A1	2427	Conga T8
A#1	3615	HH Open T8-2
B1	2427	Conga T8
C2	2427	Conga T8
C#2	3872	Crash4
D2	2427	Conga T8
D#2	3913	Ride2 R
E2	3972	Crash T8
F2	3975	Ride T9
F#2	2433	Tambourine RX5
G2	3965	Splash1 R
G#2	2117	Mambo Bell Body
A2	3971	Crash T9
A#2	1940	Vibraslap1
B2	3975	Ride T9
C3	2007	Bongo1 Hi 1Fingr 1-2
C#3	2020	Bongo1 Lo 3Fingr 1-2
D3	1966	Conga1 Hi Tip
D#3	1970	Conga1 Hi Open 2
E3	2001	Tumba Open
F3	2033	Timbale1 Hi 1-3
F#3	2037	Timbale1 Lo 1-2
G3	2080	Agogo Hi
G#3	2081	Agogo Lo
A3	2059	CabasaA 1-2
A#3	2057	Maracas Slur
B3	2108	Whistle
C4	2108	Whistle
C#4	2084	Guiro Short
D4	2083	Guiro Long
D#4	2106	Claves1
E4	1939	Wood Block
F4	1939	Wood Block
F#4	2006	Cuica Hi
G4	2005	Cuica Lo
G#4	1944	Triangle Mute
A4	1943	Triangle Open
A#4	1917	ShakerA 1
B4	1954	Sleigh Bell1
C5	1957	Wind Chime
C#5	3192	Sd Closed Rim R
D5	3302	Sd AnSm Rim
D#5	1945	Hand Clap1 St
E5	3320	Sd Hip3
F5	1758	Scratch Sd R
F#5	1763	Scratch Hip
G5	1756	Scratch Bd R
G#5	1760	Scratch Vo R
A5	1764	Scratch Hip2
A#5	1768	Scratch Combi2
B5	1770	Scratch Combi4
C6	2668	Bd Hip Deep

PDR 14 Hip Stick Kit 1

Note	Wave Number	Wave Name
C0	3325	Sd Hip Rim4
C#0	1726	Hi Q1
D0	1735	TurnTable
D#0	1597	Hit Orchestra1
E0	1756	Scratch Bd R
F0	3203	Sd LiveRoll R
F#0	2441	Analog Click
G0	3324	Sd Hip Rim3
G#0	3304	Sd AnCR Rim
A0	2713	Bd HipHop9
A#0	3371	Sd HipHop Rim6
B0	2653	Bd T8-3
C1	2652	Bd T8-2
C#1	3298	Sd T8 Rim
D1	3183	Sd Hip Stick4
D#1	1947	Hand Clap1 R
E1	3182	Sd Hip Stick3
F1	3856	Tom T8
F#1	3612	HH Closed T8-1
G1	3856	Tom T8
G#1	3613	HH Open T8-1
A1	3856	Tom T8
A#1	3613	HH Open T8-1
B1	3856	Tom T8
C2	3856	Tom T8
C#2	3872	Crash4
D2	3856	Tom T8
D#2	3913	Ride2 R
E2	3972	Crash T8
F2	3975	Ride T9
F#2	2433	Tambourine RX5
G2	3965	Splash1 R
G#2	2117	Mambo Bell Body
A2	3971	Crash T9
A#2	1940	Vibraslap1
B2	3975	Ride T9
C3	2007	Bongo1 Hi 1Fingr 1-2
C#3	2020	Bongo1 Lo 3Fingr 1-2
D3	1966	Conga1 Hi Tip
D#3	1970	Conga1 Hi Open 2
E3	2001	Tumba Open
F3	2033	Timbale1 Hi 1-3
F#3	2037	Timbale1 Lo 1-2
G3	2080	Agogo Hi
G#3	2081	Agogo Lo
A3	2059	CabasaA 1-2
A#3	2057	Maracas Slur
B3	2108	Whistle
C4	2108	Whistle
C#4	2084	Guiro Short
D4	2083	Guiro Long
D#4	2106	Claves1
E4	1939	Wood Block
F4	1939	Wood Block
F#4	2006	Cuica Hi
G4	2005	Cuica Lo
G#4	1944	Triangle Mute
A4	1943	Triangle Open
A#4	1917	ShakerA 1
B4	1954	Sleigh Bell1
C5	1957	Wind Chime
C#5	3301	Sd AnSm
D5	3194	Sd Closed Rim3
D#5	2441	Analog Click
E5	3193	Sd Closed Rim2
F5	1748	Scratch H
F#5	1749	Scratch L
G5	1750	Scratch Down
G#5	1752	Scratch Hi R
A5	1755	Scratch Bd F
A#5	1767	Scratch Combi
B5	1760	Scratch Vo R
C6	2662	Bd Jungle2

PDR 15 Hip Stick Kit 2

Note	Wave Number	Wave Name
C0	3324	Sd Hip Rim3
C#0	1727	Hi Q2
D0	1748	Scratch H
D#0	1748	Scratch H
E0	1760	Scratch Vo R
F0	3204	Sd Roll Mono
F#0	2441	Analog Click
G0	3325	Sd Hip Rim4
G#0	3298	Sd T8 Rim
A0	2713	Bd HipHop9
A#0	3183	Sd Hip Stick4
B0	2686	Bd Hard Long
C1	2702	Bd ElecClick
C#1	3180	Sd Hip Stick1
D1	3181	Sd Hip Stick2
D#1	2449	HipHop Clap8
E1	3185	Sd Hip Stick6 St
F1	3855	Tom T9 Lo
F#1	3612	HH Closed T8-1
G1	3855	Tom T9 Lo
G#1	3613	HH Open T8-1
A1	3855	Tom T9 Lo
A#1	3613	HH Open T8-1
B1	3855	Tom T9 Lo
C2	3855	Tom T9 Lo
C#2	3971	Crash T9
D2	3855	Tom T9 Lo
D#2	3910	Ride1 RL
E2	3972	Crash T8
F2	3953	Ride Cup Mono2
F#2	2436	Electric Tambourine2
G2	3965	Splash1 R
G#2	2428	Cowbell T8
A2	3971	Crash T9
A#2	1940	Vibraslap1
B2	3973	Crash Syn
C3	2007	Bongo1 Hi 1Fingr 1-2
C#3	2020	Bongo1 Lo 3Fingr 1-2
D3	1966	Conga1 Hi Tip
D#3	1970	Conga1 Hi Open 2
E3	2001	Tumba Open
F3	2033	Timbale1 Hi 1-3
F#3	2037	Timbale1 Lo 1-2
G3	2080	Agogo Hi
G#3	2081	Agogo Lo
A3	2059	CabasaA 1-2
A#3	2057	Maracas Slur
B3	2108	Whistle
C4	2108	Whistle
C#4	2084	Guiro Short
D4	2083	Guiro Long
D#4	2106	Claves1
E4	1939	Wood Block
F4	1939	Wood Block
F#4	2006	Cuica Hi
G4	2005	Cuica Lo
G#4	1944	Triangle Mute
A4	1943	Triangle Open
A#4	1917	ShakerA 1
B4	1954	Sleigh Bell1
C5	1957	Wind Chime
C#5	3298	Sd T8 Rim
D5	3180	Sd Hip Stick1
D#5	3181	Sd Hip Stick2
E5	3193	Sd Closed Rim2
F5	1750	Scratch Down
F#5	1751	Scratch Hi F
G5	1753	Scratch Lo F
G#5	1754	Scratch Lo R
A5	1756	Scratch Bd R
A#5	1767	Scratch Combi
B5	1761	Scratch Stop
C6	2712	Bd HipHop8

PDR 16 R&B Kit 1

Note	Wave Number	Wave Name
C0	2650	Bd T9 Hd3
C#0	3303	Sd AnCR
D0	3302	Sd AnSm Rim
D#0	3336	Sd ClapAna
E0	3291	Sd T9Gate
F0	3204	Sd Roll Mono
F#0	3345	Sd Timbr
G0	3342	Sd FM Rim
G#0	3310	Sd JungleFX
A0	2647	Bd T9-4
A#0	3326	Sd Hip Rim5
B0	2646	Bd T9-3
C1	2693	Bd Elec2
C#1	3298	Sd T8 Rim
D1	3348	Sd Lo-Fi
D#1	2443	HipHop Clap2
E1	3315	Sd R&B1
F1	2653	Bd T8-3
F#1	3610	HH Closed T9
G1	2653	Bd T8-3
G#1	3630	HH Pedal Hip
A1	2653	Bd T8-3
A#1	3611	HH Open T9
B1	2653	Bd T8-3
C2	2653	Bd T8-3
C#2	3866	Crash1 RL
D2	2653	Bd T8-3
D#2	3911	Ride2 St
E2	3958	China2
F2	3952	Ride Cup Mono
F#2	1929	Tambourine1 Hit
G2	3871	Crash3
G#2	2109	Cowbell1
A2	3863	Crash1 St
A#2	2428	Cowbell T8
B2	3907	Ride1 St
C3	2007	Bongo1 Hi 1Fingr 1-2
C#3	2020	Bongo1 Lo 3Fingr 1-2
D3	1966	Conga1 Hi Tip
D#3	1972	Conga1 Hi Slap Open
E3	1970	Conga1 Hi Open 2
F3	1726	Hi Q1
F#3	1726	Hi Q1
G3	2081	Agogo Lo
G#3	2081	Agogo Lo
A3	2432	Analog Shaker
A#3	2057	Maracas Slur
B3	1606	Vox Drum
C4	1606	Vox Drum
C#4	1726	Hi Q1
D4	1727	Hi Q2
D#4	2439	Claves T8
E4	1726	Hi Q1
F4	1762	Scratch Spin
F#4	1752	Scratch Hi R
G4	1751	Scratch Hi F
G#4	1944	Triangle Mute
A4	1943	Triangle Open
A#4	1918	ShakerA 2
B4	1929	Tambourine1 Hit
C5	1957	Wind Chime
C#5	3331	Sd Break Roll
D5	1708	Noise Burst
D#5	1539	Vox Bell
E5	3315	Sd R&B1
F5	1545	VoxAlk
F#5	2220	Udu High
G5	1543	Trance Choir
G#5	1734	Swarm
A5	2528	Bd Pop
A#5	3316	Sd R&B1 Rim
B5	2667	Bd R&B2
C6	3871	Crash3

PDR 17 R&B Kit 2

Note	Wave Number	Wave Name
C0	2644	Bd T9-1
C#0	3304	Sd AnCR Rim
D0	3321	Sd Hip Gate
D#0	3331	Sd Break Roll
E0	3287	Sd T9-2
F0	3201	Sd LiveRoll St
F#0	2459	HipHop Snap2
G0	3356	Sd HipHop9
G#0	3367	Sd HipHop Rim2
A0	2709	Bd HipHop5
A#0	3325	Sd Hip Rim4
B0	2644	Bd T9-1
C1	2652	Bd T8-2
C#1	3366	Sd HipHop Rim1
D1	2459	HipHop Snap2
D#1	2449	HipHop Clap8
E1	3297	Sd T8-5
F1	3856	Tom T8
F#1	3612	HH Closed T8-1
G1	3856	Tom T8
G#1	3613	HH Open T8-1
A1	3856	Tom T8
A#1	3613	HH Open T8-1
B1	3856	Tom T8
C2	3856	Tom T8
C#2	3866	Crash1 RL
D2	3856	Tom T8
D#2	3911	Ride2 St
E2	3958	China2
F2	3952	Ride Cup Mono
F#2	1929	Tambourine1 Hit
G2	3871	Crash3
G#2	2109	Cowbell1
A2	3863	Crash1 St
A#2	2428	Cowbell T8
B2	3907	Ride1 St
C3	2007	Bongo1 Hi 1Fingr 1-2
C#3	2020	Bongo1 Lo 3Fingr 1-2
D3	1966	Conga1 Hi Tip
D#3	1972	Conga1 Hi Slap Open
E3	1970	Conga1 Hi Open 2
F3	1726	Hi Q1
F#3	1726	Hi Q1
G3	2081	Agogo Lo
G#3	2081	Agogo Lo
A3	2432	Analog Shaker
A#3	2057	Maracas Slur
B3	1606	Vox Drum
C4	1606	Vox Drum
C#4	1726	Hi Q1
D4	1727	Hi Q2
D#4	2439	Claves T8
E4	1726	Hi Q1
F4	1762	Scratch Spin
F#4	1752	Scratch Hi R
G4	1751	Scratch Hi F
G#4	1944	Triangle Mute
A4	1943	Triangle Open
A#4	1918	ShakerA 2
B4	1929	Tambourine1 Hit
C5	1957	Wind Chime
C#5	3331	Sd Break Roll
D5	1708	Noise Burst
D#5	1539	Vox Bell
E5	3315	Sd R&B1
F5	1545	VoxAlk
F#5	2220	Udu High
G5	1543	Trance Choir
G#5	1734	Swarm
A5	2528	Bd Pop
A#5	3316	Sd R&B1 Rim
B5	2667	Bd R&B2
C6	3871	Crash3

PDR 18 R&B Kit 3

Note	Wave Number	Wave Name
C0	2649	Bd T9 Hd2
C#0	3303	Sd AnCR
D0	3328	Sd Break2
D#0	3331	Sd Break Roll
E0	3291	Sd T9Gate
F0	3204	Sd Roll Mono
F#0	2459	HipHop Snap2
G0	3351	Sd HipHop2
G#0	3368	Sd HipHop Rim3
A0	2645	Bd T9-2
A#0	3324	Sd Hip Rim3
B0	2644	Bd T9-1
C1	2652	Bd T8-2
C#1	3368	Sd HipHop Rim3
D1	3315	Sd R&B1
D#1	2447	HipHop Clap6
E1	3321	Sd Hip Gate
F1	3855	Tom T9 Lo
F#1	3610	HH Closed T9
G1	3855	Tom T9 Lo
G#1	3611	HH Open T9
A1	3855	Tom T9 Lo
A#1	3611	HH Open T9
B1	3855	Tom T9 Lo
C2	3854	Tom T9 Hi
C#2	3866	Crash1 RL
D2	2653	Bd T8-3
D#2	3911	Ride2 St
E2	3958	China2
F2	3952	Ride Cup Mono
F#2	1929	Tambourine1 Hit
G2	3871	Crash3
G#2	2109	Cowbell1
A2	3863	Crash1 St
A#2	2428	Cowbell T8
B2	3907	Ride1 St
C3	2007	Bongo1 Hi 1Fingr 1-2
C#3	2020	Bongo1 Lo 3Fingr 1-2
D3	1966	Conga1 Hi Tip
D#3	1972	Conga1 Hi Slap Open
E3	1970	Conga1 Hi Open 2
F3	1726	Hi Q1
F#3	1726	Hi Q1
G3	2081	Agogo Lo
G#3	2081	Agogo Lo
A3	2432	Analog Shaker
A#3	2057	Maracas Slur
B3	1606	Vox Drum
C4	1606	Vox Drum
C#4	1726	Hi Q1
D4	1727	Hi Q2
D#4	2439	Claves T8
E4	1726	Hi Q1
F4	1762	Scratch Spin
F#4	1752	Scratch Hi R
G4	1751	Scratch Hi F
G#4	1944	Triangle Mute
A4	1943	Triangle Open
A#4	1918	ShakerA 2
B4	1929	Tambourine1 Hit
C5	1957	Wind Chime
C#5	3331	Sd Break Roll
D5	1708	Noise Burst
D#5	1539	Vox Bell
E5	3315	Sd R&B1
F5	1545	VoxAlk
F#5	2220	Udu High
G5	1543	Trance Choir
G#5	1734	Swarm
A5	2528	Bd Pop
A#5	3316	Sd R&B1 Rim
B5	2667	Bd R&B2
C6	3871	Crash3

PDR 19 Trance Kit

Note	Wave Number	Wave Name
C0	2645	Bd T9-2
C#0	3302	Sd AnSm Rim
D0	3282	Sd Elec9
D#0	2424	Clap AnSm
E0	3280	Sd Elec7
F0	3284	Sd Elec11
F#0	3280	Sd Elec7
G0	3293	Sd T8-1
G#0	3290	Sd T9-5
A0	2649	Bd T9 Hd2
A#0	3285	Sd Elec12
B0	2650	Bd T9 Hd3
C1	2686	Bd Hard Long
C#1	3292	Sd T9Rim
D1	3278	Sd Elec5
D#1	2423	Clap T9
E1	3287	Sd T9-2
F1	3343	Sd Syn
F#1	3610	HH Closed T9
G1	3343	Sd Syn
G#1	3611	HH Open T9
A1	3343	Sd Syn
A#1	3611	HH Open T9
B1	3343	Sd Syn
C2	3343	Sd Syn
C#2	3971	Crash T9
D2	3343	Sd Syn
D#2	3975	Ride T9
E2	3973	Crash Syn
F2	3952	Ride Cup Mono
F#2	1929	Tambourine1 Hit
G2	3972	Crash T8
G#2	2428	Cowbell T8
A2	3954	China1 St
A#2	2428	Cowbell T8
B2	3907	Ride1 St
C3	2007	Bongo1 Hi 1Fingr 1-2
C#3	2020	Bongo1 Lo 3Fingr 1-2
D3	1973	Conga1 Hi Slap
D#3	1972	Conga1 Hi Slap Open
E3	1970	Conga1 Hi Open 2
F3	3857	Tom Syn1
F#3	3857	Tom Syn1
G3	2441	Analog Click
G#3	1708	Noise Burst
A3	2061	CabasaA 2
A#3	2057	Maracas Slur
B3	1619	Neo Seq Em-3
C4	1635	Neo Seq2 Em-5
C#4	1711	Electric Perc1
D4	1923	Shaker Hip1
D#4	2439	Claves T8
E4	2433	Tambourine RX5
F4	2429	Cowbell RX11
F#4	1924	Shaker Hip2
G4	1720	Electric Perc10
G#4	1944	Triangle Mute
A4	1943	Triangle Open
A#4	1926	Shaker Hip4
B4	1710	Zap2
C5	2712	Bd HipHop8
C#5	2648	Bd T9 Hd1
D5	2698	Bd ElecComp3
D#5	2644	Bd T9-1
E5	2650	Bd T9 Hd3
F5	2686	Bd Hard Long
F#5	3612	HH Closed T8-1
G5	2697	Bd ElecComp2
G#5	3615	HH Open T8-2
A5	2648	Bd T9 Hd1
A#5	3613	HH Open T8-1
B5	2649	Bd T9 Hd2
C6	2698	Bd ElecComp3

PDR 20 Psychedelic Kit

Note	Wave Number	Wave Name
C0	1660	LFO Seq
C#0	1543	Trance Choir
D0	2150	Tibetan Bowl
D#0	1761	Scratch Stop
E0	1679	Fx Female Voice St
F0	1602	Stab Organ2
F#0	1737	Door Squeak
G0	1659	Radio Noise
G#0	1737	Door Squeak
A0	1889	Acoustic Bass FX06
A#0	1894	Electric Bass FX 02
B0	1889	Acoustic Bass FX06
C1	2660	Bd BlpHd
C#1	2659	Bd Blip
D1	3321	Sd Hip Gate
D#1	2851	Sd SonA St1-4
E1	1708	Noise Burst
F1	3861	Tom Dist Lo
F#1	3610	HH Closed T9
G1	3860	Tom Dist Hi
G#1	3374	HH Closed 2St
A1	3854	Tom T9 Hi
A#1	3611	HH Open T9
B1	3854	Tom T9 Hi
C2	3854	Tom T9 Hi
C#2	3954	China1 St
D2	3854	Tom T9 Hi
D#2	3963	Splash1 St
E2	3971	Crash T9
F2	3975	Ride T9
F#2	2075	Pandeiro Tip
G2	2435	Electric Tambourine1
G#2	1727	Hi Q2
A2	2642	Bd Gate
A#2	1727	Hi Q2
B2	1886	Acoustic Bass FX03
C3	1884	Acoustic Bass FX01
C#3	1523	Mini Blip6
D3	1518	Mini Blip1
D#3	1519	Mini Blip2
E3	1998	Quinto1 Slap
F3	2141	Tabla Bya
F#3	2131	Djembe1 Edge
G3	2142	Tabla Nah
G#3	2225	Barasim Tak
A3	1718	Electric Perc8
A#3	1723	Electric Perc13
B3	1614	Hop FX1
C4	1563	Motion Beam
C#4	1710	Zap2
D4	1694	Digi Voice Mod
D#4	1281	Human Whistle
E4	1693	Digital Wind
F4	2441	Analog Click
F#4	3612	HH Closed T8-1
G4	3341	Sd FM
G#4	3427	HH Half Open2 RL
A4	2439	Claves T8
A#4	3613	HH Open T8-1
B4	3977	Reverse Cymbal
C5	2687	Bd Analog Tight
C#5	2698	Bd ElecComp3
D5	2650	Bd T9 Hd3
D#5	2682	Bd ZapHard
E5	2691	Bd Slimy
F5	2673	Bd Break Hard
F#5	3170	Sd BreakRim
G5	2739	Sd Soul St1-3
G#5	2956	Sd Ambience
A5	2935	Sd Rock Mute1 R
A#5	3338	Sd Cut
B5	3313	Sd D&B3
C6	3332	Sd FX1

PDR 21 Chill Out Kit

Note	Wave Number	Wave Name
C0	2651	Bd T8-1
C#0	3298	Sd T8 Rim
D0	3294	Sd T8-2
D#0	2425	Electric Clap1
E0	3284	Sd Elec11
F0	3280	Sd Elec7
F#0	3296	Sd T8-4
G0	2693	Bd Elec2
G#0	3293	Sd T8-1
A0	2712	Bd HipHop8
A#0	3295	Sd T8-3
B0	2713	Bd HipHop9
C1	2712	Bd HipHop8
C#1	3302	Sd AnSm Rim
D1	3353	Sd HipHop5
D#1	2424	Clap AnSm
E1	3354	Sd HipHop6
F1	3856	Tom T8
F#1	3612	HH Closed T8-1
G1	3856	Tom T8
G#1	3613	HH Open T8-1
A1	3856	Tom T8
A#1	3613	HH Open T8-1
B1	3856	Tom T8
C2	3856	Tom T8
C#2	3871	Crash3
D2	3856	Tom T8
D#2	3975	Ride T9
E2	3963	Splash1 St
F2	3952	Ride Cup Mono
F#2	1929	Tambourine1 Hit
G2	3972	Crash T8
G#2	2428	Cowbell T8
A2	3954	China1 St
A#2	2428	Cowbell T8
B2	3907	Ride1 St
C3	2427	Conga T8
C#3	2427	Conga T8
D3	2427	Conga T8
D#3	2427	Conga T8
E3	2427	Conga T8
F3	1973	Conga1 Hi Slap
F#3	1972	Conga1 Hi Slap Open
G3	1970	Conga1 Hi Open 2
G#3	2034	Timbale1 Hi 1
A3	2061	CabasaA 2
A#3	2057	Maracas Slur
B3	1679	Fx Female Voice St
C4	1639	Portamento Lead Seq
C#4	1719	Electric Perc9
D4	1923	Shaker Hip1
D#4	2439	Claves T8
E4	1726	Hi Q1
F4	1727	Hi Q2
F#4	1924	Shaker Hip2
G4	1725	Electric Perc15
G#4	1944	Triangle Mute
A4	1943	Triangle Open
A#4	1926	Shaker Hip4
B4	1703	Ripper
C5	2695	Bd Elec4
C#5	3318	Sd Hip1
D5	3282	Sd Elec9
D#5	3279	Sd Elec6
E5	3351	Sd HipHop2
F5	2701	Bd ElecGate
F#5	3614	HH Closed T8-2
G5	2690	Bd ThickSkin
G#5	3615	HH Open T8-2
A5	2672	Bd Break Heavy
A#5	3615	HH Open T8-2
B5	2669	Bd Break Deep
C6	2667	Bd R&B2

PDR 22 Brush Kit

Note	Wave Number	Wave Name
C0	2106	Claves1
C#0	3205	Sd Brush Soft St
D0	3217	Sd Brush Swir St
D#0	3208	Sd Brush Med St
E0	3220	Sd Brush SwirAtt St
F0	3201	Sd LiveRoll St
F#0	1935	Castanet1
G0	3205	Sd Brush Soft St
G#0	1933	Stick1
A0	2496	Bd Funk St1-2
A#0	2842	Sd Basic 3St
B0	2534	Bd Jazz1-2St
C1	2543	Bd FK Jazz St
C#1	3214	Sd Closed Rim4 St
D1	3208	Sd Brush Med St
D#1	1945	Hand Clap1 St
E1	3211	Sd Brush vari St
F1	3835	Tom Brush Floor St
F#1	3471	HH Power ClTip 1-4St
G1	3831	Tom Brush Low St
G#1	3511	HH Power ClPedal St
A1	3831	Tom Brush Low St
A#1	3515	HH Power Open EdgeSt
B1	3827	Tom Brush Mid St
C2	3827	Tom Brush Mid St
C#2	3889	Crash Brush1 St
D2	3823	Tom Brush Hi St
D#2	3939	Ride Brush1 St
E2	3954	China1 St
F2	3893	Crash Brush Cup St
F#2	1927	Tambourine1 Sw
G2	3963	Splash1 St
G#2	2110	Cowbell2
A2	3897	Crash Brush2 St
A#2	1940	Vibraslap1
B2	3943	Ride Brush2 St
C3	2007	Bongo1 Hi 1Fingr 1-2
C#3	2017	Bongo1 Lo 1Fingr 1-2
D3	1974	Conga1 Hi SlpMute1-2
D#3	1968	Conga1 Hi Open 1-2
E3	1979	Conga1 Lo Open 1-2
F3	2033	Timbale1 Hi 1-3
F#3	2037	Timbale1 Lo 1-2
G3	2080	Agogo Hi
G#3	2081	Agogo Lo
A3	2059	CabasaA 1-2
A#3	2057	Maracas Slur
B3	2108	Whistle
C4	2108	Whistle
C#4	2084	Guiro Short
D4	2083	Guiro Long
D#4	2106	Claves1
E4	1939	Wood Block
F4	1939	Wood Block
F#4	2006	Cuica Hi
G4	2005	Cuica Lo
G#4	1944	Triangle Mute
A4	1943	Triangle Open
A#4	1916	ShakerA 1/3
B4	1954	Sleigh Bell1
C5	1957	Wind Chime
C#5	2718	Sd Bld St1-4
D5	2877	Sd Blues 3St
D#5	2921	Sd Hip St1-2
E5	2818	Sd Funk St1-3
F5	2738	Sd Soul St1-4
F#5	3169	Sd LdwHMono
G5	3172	Sd Heavy
G#5	2901	Sd Tight St1-4
A5	2886	Sd BluesHeart St1-3
A#5	2460	Bd Snap 1-2
B5	2469	Bd Tight 1-2
C6	2496	Bd Funk St1-2

PDR 23 Jazz Kit

Note	Wave Number	Wave Name
C0	2534	Bd Jazz1-2St
C#0	3207	Sd Brush Soft R
D0	3220	Sd Brush SwirAtt St
D#0	3208	Sd Brush Med St
E0	3220	Sd Brush SwirAtt St
F0	3201	Sd LiveRoll St
F#0	1935	Castanet1
G0	2922	Sd Hip 1St
G#0	1933	Stick1
A0	2501	Bd Funk 1 L
A#0	2909	Sd Tight 3St
B0	2543	Bd FK Jazz St
C1	2496	Bd Funk St1-2
C#1	3190	Sd Closed Rim St
D1	2907	Sd Tight 1St
D#1	3195	Sd RockRoll St
E1	2886	Sd BluesHeart St1-3
F1	3651	Tom Floor St
F#1	3471	HH Power ClTip 1-4St
G1	3651	Tom Floor St
G#1	3511	HH Power ClPedal St
A1	3647	Tom Low St
A#1	3515	HH Power Open EdgeSt
B1	3643	Tom Mid St
C2	3643	Tom Mid St
C#2	3867	Crash2 St
D2	3639	Tom Hi St
D#2	3911	Ride2 St
E2	3954	China1 St
F2	3953	Ride Cup Mono2
F#2	1929	Tambourine1 Hit
G2	3963	Splash1 St
G#2	2109	Cowbell1
A2	3867	Crash2 St
A#2	1940	Vibraslap1
B2	3907	Ride1 St
C3	2007	Bongo1 Hi 1Fingr 1-2
C#3	2020	Bongo1 Lo 3Fingr 1-2
D3	1966	Conga1 Hi Tip
D#3	1972	Conga1 Hi Slap Open
E3	1970	Conga1 Hi Open 2
F3	2034	Timbale1 Hi 1
F#3	2034	Timbale1 Hi 1
G3	2081	Agogo Lo
G#3	2081	Agogo Lo
A3	2060	CabasaA 1
A#3	2057	Maracas Slur
B3	3207	Sd Brush Soft R
C4	3217	Sd Brush Swir St
C#4	2084	Guiro Short
D4	2083	Guiro Long
D#4	2106	Claves1
E4	1939	Wood Block
F4	1939	Wood Block
F#4	2041	Timbale1 Paila H
G4	2042	Timbale1 Paila L
G#4	1944	Triangle Mute
A4	1943	Triangle Open
A#4	1918	ShakerA 2
B4	1954	Sleigh Bell1
C5	1957	Wind Chime
C#5	2878	Sd Blues L1-3
D5	2833	Sd Funk Ay St
D#5	2894	Sd BluesHeart R1-3
E5	2872	Sd Blues St1-2
F5	2509	Bd Low L
F#5	3169	Sd LdwHMono
G5	2527	Bd Dry2
G#5	3220	Sd Brush SwirAtt St
A5	2668	Bd Hip Deep
A#5	3204	Sd Roll Mono
B5	2495	Bd Normal 2R
C6	3897	Crash Brush2 St

PDR 24 Pop Latin Kit

Note	Wave Number	Wave Name
C0	2106	Claves1
C#0	2094	Cajon1 Kick
D0	2095	Cajon1 Slap
D#0	2096	Cajon1 Tip 1-2
E0	2106	Claves1
F0	1939	Wood Block
F#0	1945	Hand Clap1 St
G0	3912	Ride2 L
G#0	2459	HipHop Snap2
A0	1935	Castanet1
A#0	1966	Conga1 Hi Tip
B0	1967	Conga1 Hi Heel
C1	1968	Conga1 Hi Open 1-2
C#1	1971	Conga1 Hi Mute
D1	1972	Conga1 Hi Slap Open
D#1	1973	Conga1 Hi Slap
E1	1974	Conga1 Hi SlpMute1-2
F1	1977	Conga1 Lo Tip
F#1	1978	Conga1 Lo Heel
G1	1979	Conga1 Lo Open 1-2
G#1	1982	Conga1 Lo Mute
A1	1983	Conga1 Lo Slap Open
A#1	1983	Conga1 Lo Slap Open
B1	1980	Conga1 Lo Open 1
C2	2007	Bongo1 Hi 1Fingr 1-2
C#2	2010	Bongo1 Hi 3Fingr 1-2
D2	2013	Bongo1 Hi Rim
D#2	2014	Bongo1 Hi Tip
E2	2015	Bongo1 Hi Heel
F2	2016	Bongo1 Hi Slap
F#2	2017	Bongo1 Lo 1Fingr 1-2
G2	2020	Bongo1 Lo 3Fingr 1-2
G#2	2023	Bongo1 Lo Rim
A2	2024	Bongo1 Lo Tip
A#2	2020	Bongo1 Lo 3Fingr 1-2
B2	2016	Bongo1 Hi Slap
C3	2037	Timbale1 Lo 1-2
C#3	1998	Quinto1 Slap
D3	1997	Quinto1 Open
D#3	1966	Conga1 Hi Tip
E3	2001	Tumba Open
F3	2051	Paila L
F#3	2033	Timbale1 Hi 1-3
G3	2073	Pandeiro Open
G#3	2074	Pandeiro Thump
A3	2075	Pandeiro Tip
A#3	2076	Pandeiro Heel
B3	2052	Paila H
C4	2110	Cowbell2
C#4	2110	Cowbell2
D4	2080	Agogo Hi
D#4	2080	Agogo Hi
E4	2084	Guiro Short
F4	2083	Guiro Long
F#4	2086	MetalGuiro Short 1-2
G4	2089	MetalGuiro Long
G#4	1927	Tambourine1 Sw
A4	2077	Tmbourim Open
A#4	2079	Tmbourim Mute
B4	2078	Tmbourim Finger
C5	2056	Maracas Sw
C#5	1916	ShakerA 1/3
D5	2059	CabasaA 1-2
D#5	2005	Cuica Lo
E5	2006	Cuica Hi
F5	2109	Cowbell1
F#5	2117	Mambo Bell Body
G5	2152	Shekere Down
G#5	2154	Shekere Slap
A5	1944	Triangle Mute
A#5	1943	Triangle Open
B5	2108	Whistle
C6	1957	Wind Chime

PDR 25 Analog T9 Kit

Note	Wave Number	Wave Name
C0	2645	Bd T9-2
C#0	3303	Sd AnCR
D0	3290	Sd T9-5
D#0	2424	Clap AnSm
E0	3291	Sd T9Gate
F0	3195	Sd RockRoll St
F#0	3288	Sd T9-3
G0	3289	Sd T9-4
G#0	3291	Sd T9Gate
A0	2647	Bd T9-4
A#0	3290	Sd T9-5
B0	2644	Bd T9-1
C1	2646	Bd T9-3
C#1	3292	Sd T9Rim
D1	3286	Sd T9-1
D#1	2423	Clap T9
E1	3287	Sd T9-2
F1	3855	Tom T9 Lo
F#1	3610	HH Closed T9
G1	3855	Tom T9 Lo
G#1	3611	HH Open T9
A1	3855	Tom T9 Lo
A#1	3611	HH Open T9
B1	3854	Tom T9 Hi
C2	3854	Tom T9 Hi
C#2	3971	Crash T9
D2	3854	Tom T9 Hi
D#2	3975	Ride T9
E2	3958	China2
F2	3952	Ride Cup Mono
F#2	2433	Tambourine RX5
G2	3871	Crash3
G#2	2109	Cowbell1
A2	3872	Crash4
A#2	2428	Cowbell T8
B2	3913	Ride2 R
C3	2427	Conga T8
C#3	2427	Conga T8
D3	1966	Conga1 Hi Tip
D#3	1972	Conga1 Hi Slap Open
E3	1970	Conga1 Hi Open 2
F3	2033	Timbale1 Hi 1-3
F#3	2037	Timbale1 Lo 1-2
G3	2441	Analog Click
G#3	2427	Conga T8
A3	2059	CabasaA 1-2
A#3	2057	Maracas Slur
B3	1732	FxGun2
C4	1731	FxGun1
C#4	1748	Scratch H
D4	1750	Scratch Down
D#4	1726	Hi Q1
E4	1726	Hi Q1
F4	1727	Hi Q2
F#4	1749	Scratch L
G4	1749	Scratch L
G#4	1944	Triangle Mute
A4	1943	Triangle Open
A#4	2432	Analog Shaker
B4	1954	Sleigh Bell1
C5	1957	Wind Chime
C#5	2951	Sd Piccolo
D5	3297	Sd T8-5
D#5	3198	Sd RockRollD St
E5	3208	Sd Brush Med St
F5	2660	Bd BlpHd
F#5	3307	Sd Jungle1
G5	2684	Bd Sustain
G#5	3311	Sd D&B1
A5	2671	Bd Break2
A#5	3337	Sd Dist
B5	2685	Bd TekPower
C6	2679	Bd Distortion RM

PDR 26 Analog T8 Kit

Note	Wave Number	Wave Name
C0	2651	Bd T8-1
C#0	3303	Sd AnCR
D0	3296	Sd T8-4
D#0	3336	Sd ClapAna
E0	3295	Sd T8-3
F0	3856	Tom T8
F#0	3297	Sd T8-5
G0	2653	Bd T8-3
G#0	3296	Sd T8-4
A0	2652	Bd T8-2
A#0	3295	Sd T8-3
B0	1498	T8 Kick Bass
C1	2652	Bd T8-2
C#1	3298	Sd T8 Rim
D1	3294	Sd T8-2
D#1	2423	Clap T9
E1	3293	Sd T8-1
F1	3856	Tom T8
F#1	3614	HH Closed T8-2
G1	3856	Tom T8
G#1	3613	HH Open T8-1
A1	3856	Tom T8
A#1	3613	HH Open T8-1
B1	3856	Tom T8
C2	3856	Tom T8
C#2	3972	Crash T8
D2	3856	Tom T8
D#2	3975	Ride T9
E2	3958	China2
F2	3952	Ride Cup Mono
F#2	2433	Tambourine RX5
G2	3965	Splash1 R
G#2	2428	Cowbell T8
A2	3872	Crash4
A#2	1940	Vibraslap1
B2	3913	Ride2 R
C3	2427	Conga T8
C#3	2427	Conga T8
D3	2427	Conga T8
D#3	2427	Conga T8
E3	2427	Conga T8
F3	2034	Timbale1 Hi 1
F#3	2038	Timbale1 Lo 1
G3	1704	Glass
G#3	1704	Glass
A3	2059	CabasaA 1-2
A#3	2437	MaracasT8
B3	1732	FxGun2
C4	1731	FxGun1
C#4	2432	Analog Shaker
D4	2432	Analog Shaker
D#4	2439	Claves T8
E4	1726	Hi Q1
F4	1727	Hi Q2
F#4	1749	Scratch L
G4	1749	Scratch L
G#4	1944	Triangle Mute
A4	1943	Triangle Open
A#4	2432	Analog Shaker
B4	1954	Sleigh Bell1
C5	1957	Wind Chime
C#5	3318	Sd Hip1
D5	3319	Sd Hip2
D#5	3321	Sd Hip Gate
E5	3327	Sd Break1
F5	2659	Bd Blip
F#5	3332	Sd FX1
G5	2681	Bd FxHammer
G#5	3347	Sd Hammer
A5	2682	Bd ZapHard
A#5	3340	Sd Garg L
B5	2685	Bd TekPower
C6	2691	Bd Slimy

PDR 27 Tekno Kit

Note	Wave Number	Wave Name
C0	2691	Bd Slimy
C#0	3292	Sd T9Rim
D0	3297	Sd T8-5
D#0	2423	Clap T9
E0	3288	Sd T9-3
F0	3305	Sd Human1
F#0	3320	Sd Hip3
G0	3289	Sd T9-4
G#0	3319	Sd Hip2
A0	2690	Bd ThickSkin
A#0	3287	Sd T9-2
B0	2677	Bd Distortion4
C1	2683	Bd ZapMid
C#1	3298	Sd T8 Rim
D1	3297	Sd T8-5
D#1	2423	Clap T9
E1	3343	Sd Syn
F1	3856	Tom T8
F#1	3632	HH Closed Lo-Fi
G1	3856	Tom T8
G#1	3633	HH Open Lo-Fi
A1	3856	Tom T8
A#1	3633	HH Open Lo-Fi
B1	3856	Tom T8
C2	3856	Tom T8
C#2	3972	Crash T8
D2	3856	Tom T8
D#2	3975	Ride T9
E2	3871	Crash3
F2	3952	Ride Cup Mono
F#2	2434	Tambourine AnCR
G2	3868	Crash2 L
G#2	2428	Cowbell T8
A2	3971	Crash T9
A#2	2428	Cowbell T8
B2	3973	Crash Syn
C3	2427	Conga T8
C#3	2427	Conga T8
D3	2427	Conga T8
D#3	2427	Conga T8
E3	2427	Conga T8
F3	2033	Timbale1 Hi 1-3
F#3	2037	Timbale1 Lo 1-2
G3	1704	Glass
G#3	1704	Glass
A3	2060	CabasaA 1
A#3	2437	MaracasT8
B3	1732	FxGun2
C4	1731	FxGun1
C#4	1748	Scratch H
D4	1750	Scratch Down
D#4	1726	Hi Q1
E4	1726	Hi Q1
F4	1727	Hi Q2
F#4	1749	Scratch L
G4	1749	Scratch L
G#4	1944	Triangle Mute
A4	1943	Triangle Open
A#4	2432	Analog Shaker
B4	1954	Sleigh Bell1
C5	2695	Bd Elec4
C#5	2698	Bd ElecComp3
D5	2700	Bd ElecFX2
D#5	2702	Bd ElecClick
E5	2703	Bd ElecPower1
F5	2704	Bd ElecPower2
F#5	2694	Bd Elec3
G5	2692	Bd Elec1
G#5	3279	Sd Elec6
A5	3280	Sd Elec7
A#5	3281	Sd Elec8
B5	3282	Sd Elec9
C6	3285	Sd Elec12

PDR 28 House Kit 1

Note	Wave Number	Wave Name
C0	2647	Bd T9-4
C#0	3298	Sd T8 Rim
D0	3297	Sd T8-5
D#0	1945	Hand Clap1 St
E0	3340	Sd Garg L
F0	3201	Sd LiveRoll St
F#0	3288	Sd T9-3
G0	3293	Sd T8-1
G#0	3290	Sd T9-5
A0	2644	Bd T9-1
A#0	3291	Sd T9Gate
B0	2645	Bd T9-2
C1	2645	Bd T9-2
C#1	3292	Sd T9Rim
D1	3286	Sd T9-1
D#1	2423	Clap T9
E1	3287	Sd T9-2
F1	3855	Tom T9 Lo
F#1	3612	HH Closed T8-1
G1	3855	Tom T9 Lo
G#1	3611	HH Open T9
A1	3855	Tom T9 Lo
A#1	3611	HH Open T9
B1	3854	Tom T9 Hi
C2	3854	Tom T9 Hi
C#2	3971	Crash T9
D2	3854	Tom T9 Hi
D#2	3975	Ride T9
E2	3871	Crash3
F2	3952	Ride Cup Mono
F#2	1929	Tambourine1 Hit
G2	3871	Crash3
G#2	2109	Cowbell1
A2	3867	Crash2 St
A#2	2428	Cowbell T8
B2	3907	Ride1 St
C3	2007	Bongo1 Hi 1Fingr 1-2
C#3	2020	Bongo1 Lo 3Fingr 1-2
D3	1966	Conga1 Hi Tip
D#3	1972	Conga1 Hi Slap Open
E3	1970	Conga1 Hi Open 2
F3	2034	Timbale1 Hi 1
F#3	2034	Timbale1 Hi 1
G3	2081	Agogo Lo
G#3	2081	Agogo Lo
A3	2060	CabasaA 1
A#3	2057	Maracas Slur
B3	1606	Vox Drum
C4	1606	Vox Drum
C#4	2084	Guiro Short
D4	2083	Guiro Long
D#4	2106	Claves1
E4	1939	Wood Block
F4	1939	Wood Block
F#4	2006	Cuica Hi
G4	2005	Cuica Lo
G#4	1944	Triangle Mute
A4	1943	Triangle Open
A#4	2432	Analog Shaker
B4	1954	Sleigh Bell1
C5	1957	Wind Chime
C#5	3331	Sd Break Roll
D5	1708	Noise Burst
D#5	1539	Vox Bell
E5	3315	Sd R&B1
F5	1545	VoxAlk
F#5	2220	Udu High
G5	1543	Trance Choir
G#5	1734	Swarm
A5	2528	Bd Pop
A#5	3316	Sd R&B1 Rim
B5	2667	Bd R&B2
C6	3871	Crash3

PDR 29 House Kit 2

Note	Wave Number	Wave Name
C0	2645	Bd T9-2
C#0	3298	Sd T8 Rim
D0	2146	Dohol High
D#0	2423	Clap T9
E0	3287	Sd T9-2
F0	3291	Sd T9Gate
F#0	3306	Sd Human2
G0	3332	Sd FX1
G#0	3348	Sd Lo-Fi
A0	2649	Bd T9 Hd2
A#0	3292	Sd T9Rim
B0	2646	Bd T9-3
C1	2648	Bd T9 Hd1
C#1	3292	Sd T9Rim
D1	3287	Sd T9-2
D#1	1708	Noise Burst
E1	2768	Sd Strong L1-4
F1	3343	Sd Syn
F#1	3610	HH Closed T9
G1	3343	Sd Syn
G#1	3611	HH Open T9
A1	3343	Sd Syn
A#1	3611	HH Open T9
B1	3343	Sd Syn
C2	3343	Sd Syn
C#2	3971	Crash T9
D2	3343	Sd Syn
D#2	3975	Ride T9
E2	3973	Crash Syn
F2	3952	Ride Cup Mono
F#2	1929	Tambourine1 Hit
G2	3972	Crash T8
G#2	2109	Cowbell1
A2	3871	Crash3
A#2	2428	Cowbell T8
B2	3907	Ride1 St
C3	2007	Bongo1 Hi 1Fingr 1-2
C#3	2020	Bongo1 Lo 3Fingr 1-2
D3	1967	Conga1 Hi Heel
D#3	1972	Conga1 Hi Slap Open
E3	1970	Conga1 Hi Open 2
F3	3857	Tom Syn1
F#3	3857	Tom Syn1
G3	2441	Analog Click
G#3	3349	Sd Rim SE
A3	2060	CabasaA 1
A#3	2057	Maracas Slur
B3	1606	Vox Drum
C4	1606	Vox Drum
C#4	2434	Tambourine AnCR
D4	2432	Analog Shaker
D#4	2439	Claves T8
E4	2433	Tambourine RX5
F4	2429	Cowbell RX11
F#4	2432	Analog Shaker
G4	1751	Scratch Hi F
G#4	1944	Triangle Mute
A4	1943	Triangle Open
A#4	2432	Analog Shaker
B4	1954	Sleigh Bell1
C5	1957	Wind Chime
C#5	2141	Tabla Bya
D5	2142	Tabla Nah
D#5	2143	Tabla Mute
E5	1539	Vox Bell
F5	2528	Bd Pop
F#5	2220	Udu High
G5	2643	Bd FX Gate
G#5	1708	Noise Burst
A5	2644	Bd T9-1
A#5	3331	Sd Break Roll
B5	3871	Crash3
C6	1735	TurnTable

PDR 30 House Compressed Kit

Note	Wave Number	Wave Name
C0	2647	Bd T9-4
C#0	3298	Sd T8 Rim
D0	3297	Sd T8-5
D#0	1945	Hand Clap1 St
E0	3340	Sd Garg L
F0	3201	Sd LiveRoll St
F#0	3288	Sd T9-3
G0	3293	Sd T8-1
G#0	3290	Sd T9-5
A0	2644	Bd T9-1
A#0	3291	Sd T9Gate
B0	2645	Bd T9-2
C1	2646	Bd T9-3
C#1	3292	Sd T9Rim
D1	3286	Sd T9-1
D#1	2423	Clap T9
E1	3287	Sd T9-2
F1	3855	Tom T9 Lo
F#1	3612	HH Closed T8-1
G1	3855	Tom T9 Lo
G#1	3611	HH Open T9
A1	3855	Tom T9 Lo
A#1	3611	HH Open T9
B1	3854	Tom T9 Hi
C2	3854	Tom T9 Hi
C#2	3971	Crash T9
D2	3854	Tom T9 Hi
D#2	3975	Ride T9
E2	3871	Crash3
F2	3952	Ride Cup Mono
F#2	1929	Tambourine1 Hit
G2	3871	Crash3
G#2	2109	Cowbell1
A2	3867	Crash2 St
A#2	2428	Cowbell T8
B2	3907	Ride1 St
C3	2007	Bongo1 Hi 1Fingr 1-2
C#3	2020	Bongo1 Lo 3Fingr 1-2
D3	1966	Conga1 Hi Tip
D#3	1972	Conga1 Hi Slap Open
E3	1970	Conga1 Hi Open 2
F3	2034	Timbale1 Hi 1
F#3	2034	Timbale1 Hi 1
G3	2081	Agogo Lo
G#3	2081	Agogo Lo
A3	2060	CabasaA 1
A#3	2057	Maracas Slur
B3	1606	Vox Drum
C4	1606	Vox Drum
C#4	2084	Guiro Short
D4	2083	Guiro Long
D#4	2106	Claves1
E4	1939	Wood Block
F4	1939	Wood Block
F#4	2006	Cuica Hi
G4	2005	Cuica Lo
G#4	1944	Triangle Mute
A4	1943	Triangle Open
A#4	2432	Analog Shaker
B4	1954	Sleigh Bell1
C5	1957	Wind Chime
C#5	3331	Sd Break Roll
D5	1708	Noise Burst
D#5	1539	Vox Bell
E5	3315	Sd R&B1
F5	1545	VoxAlk
F#5	2220	Udu High
G5	1543	Trance Choir
G#5	1734	Swarm
A5	2528	Bd Pop
A#5	3316	Sd R&B1 Rim
B5	2667	Bd R&B2
C6	3871	Crash3

PDR 31 Big Kit

Note	Wave Number	Wave Name
C0	2643	Bd FX Gate
C#0	2020	Bongo1 Lo 3Fingr 1-2
D0	3173	Sd GM
D#0	1945	Hand Clap1 St
E0	3168	Sd Gate2
F0	3195	Sd RockRoll St
F#0	2936	Sd Rock Rim1 St
G0	2951	Sd Piccolo
G#0	2948	Sd Rock Flam St
A0	2532	Bd Room2
A#0	3174	Sd Rock Stick1 St
B0	2533	Bd Room3
C1	2642	Bd Gate
C#1	2955	Sd Mid Rim
D1	3167	Sd Gate1
D#1	2424	Clap AnSm
E1	2956	Sd Ambience
F1	3853	Tom Ambience Lo
F#1	3623	HH Closed D&B
G1	3853	Tom Ambience Lo
G#1	3624	HH Pedal D&B
A1	3853	Tom Ambience Lo
A#1	3625	HH Open D&B
B1	3852	Tom Ambience Hi
C2	3852	Tom Ambience Hi
C#2	3870	Crash2 RL
D2	3852	Tom Ambience Hi
D#2	3907	Ride1 St
E2	3954	China1 St
F2	3952	Ride Cup Mono
F#2	1929	Tambourine1 Hit
G2	3871	Crash3
G#2	2109	Cowbell1
A2	3867	Crash2 St
A#2	1940	Vibraslap1
B2	3910	Ride1 RL
C3	2007	Bongo1 Hi 1Fingr 1-2
C#3	2020	Bongo1 Lo 3Fingr 1-2
D3	1966	Conga1 Hi Tip
D#3	1972	Conga1 Hi Slap Open
E3	1970	Conga1 Hi Open 2
F3	2680	Bd +HH
F#3	2680	Bd +HH
G3	2081	Agogo Lo
G#3	2081	Agogo Lo
A3	2060	CabasaA 1
A#3	2057	Maracas Slur
B3	1732	FxGun2
C4	1731	FxGun1
C#4	1748	Scratch H
D4	1750	Scratch Down
D#4	2106	Claves1
E4	1939	Wood Block
F4	1939	Wood Block
F#4	1749	Scratch L
G4	1749	Scratch L
G#4	1944	Triangle Mute
A4	1943	Triangle Open
A#4	1918	ShakerA 2
B4	1954	Sleigh Bell1
C5	1957	Wind Chime
C#5	3337	Sd Dist
D5	3341	Sd FM
D#5	3342	Sd FM Rim
E5	3344	Sd Clappy
F5	2533	Bd Room3
F#5	3345	Sd Timbr
G5	2520	Bd Rock1 St
G#5	3349	Sd Rim SE
A5	2523	Bd Rock2 St
A#5	3331	Sd Break Roll
B5	2664	Bd D&B1
C6	2532	Bd Room2

PDR 32 Break Kit

Note	Wave Number	Wave Name
C0	2669	Bd Break Deep
C#0	2922	Sd Hip 1St
D0	3348	Sd Lo-Fi
D#0	3344	Sd Clappy
E0	3169	Sd LdwHMono
F0	3198	Sd RockRollD St
F#0	3167	Sd Gate1
G0	2954	Sd Mid
G#0	3170	Sd BreakRim
A0	2672	Bd Break Heavy
A#0	3325	Sd Hip Rim4
B0	2671	Bd Break2
C1	2670	Bd Break1
C#1	3322	Sd Hip Rim1
D1	3329	Sd Break3
D#1	3327	Sd Break1
E1	3328	Sd Break2
F1	3647	Tom Low St
F#1	3441	HH Closed Rock S R
G1	3647	Tom Low St
G#1	3454	HH Pedal Rock R
A1	3647	Tom Low St
A#1	3466	HH Half Open Rock R
B1	3639	Tom Hi St
C2	3639	Tom Hi St
C#2	3868	Crash2 L
D2	3639	Tom Hi St
D#2	3912	Ride2 L
E2	3955	China1 L
F2	3952	Ride Cup Mono
F#2	1929	Tambourine1 Hit
G2	3871	Crash3
G#2	2109	Cowbell1
A2	3869	Crash2 R
A#2	2429	Cowbell RX11
B2	3951	Ride Mono
C3	2007	Bongo1 Hi 1Fingr 1-2
C#3	2020	Bongo1 Lo 3Fingr 1-2
D3	1966	Conga1 Hi Tip
D#3	1972	Conga1 Hi Slap Open
E3	1970	Conga1 Hi Open 2
F3	2007	Bongo1 Hi 1Fingr 1-2
F#3	2020	Bongo1 Lo 3Fingr 1-2
G3	1970	Conga1 Hi Open 2
G#3	2081	Agogo Lo
A3	2060	CabasaA 1
A#3	2057	Maracas Slur
B3	2034	Timbale1 Hi 1
C4	2038	Timbale1 Lo 1
C#4	1748	Scratch H
D4	1750	Scratch Down
D#4	2106	Claves1
E4	1939	Wood Block
F4	1939	Wood Block
F#4	1749	Scratch L
G4	1749	Scratch L
G#4	1944	Triangle Mute
A4	1943	Triangle Open
A#4	1918	ShakerA 2
B4	1954	Sleigh Bell1
C5	1735	TurnTable
C#5	3331	Sd Break Roll
D5	1504	FM Bass5
D#5	1553	Mind Bell
E5	3332	Sd FX1
F5	2523	Bd Rock2 St
F#5	1660	LFO Seq
G5	1703	Ripper
G#5	1708	Noise Burst
A5	1736	Police
A#5	1552	Fairwave
B5	1734	Swarm
C6	1659	Radio Noise

PDR 33 Drum'n'Bass Kit

Note	Wave Number	Wave Name
C0	2668	Bd Hip Deep
C#0	2020	Bongo1 Lo 3Fingr 1-2
D0	3317	Sd R&B2
D#0	3345	Sd Timbr
E0	3313	Sd D&B3
F0	3347	Sd Hammer
F#0	1704	Glass
G0	2665	Bd D&B2
G#0	3395	HH Pedal 3 St
A0	2668	Bd Hip Deep
A#0	3428	HH Open2 St
B0	2673	Bd Break Hard
C1	2664	Bd D&B1
C#1	2955	Sd Mid Rim
D1	3311	Sd D&B1
D#1	1708	Noise Burst
E1	3312	Sd D&B2
F1	3853	Tom Ambience Lo
F#1	3623	HH Closed D&B
G1	3853	Tom Ambience Lo
G#1	3624	HH Pedal D&B
A1	3853	Tom Ambience Lo
A#1	3625	HH Open D&B
B1	3852	Tom Ambience Hi
C2	3852	Tom Ambience Hi
C#2	3868	Crash2 L
D2	3852	Tom Ambience Hi
D#2	3907	Ride1 St
E2	3958	China2
F2	3952	Ride Cup Mono
F#2	1929	Tambourine1 Hit
G2	3871	Crash3
G#2	2109	Cowbell1
A2	3867	Crash2 St
A#2	1940	Vibraslap1
B2	3907	Ride1 St
C3	2007	Bongo1 Hi 1Fingr 1-2
C#3	2020	Bongo1 Lo 3Fingr 1-2
D3	1966	Conga1 Hi Tip
D#3	1972	Conga1 Hi Slap Open
E3	1970	Conga1 Hi Open 2
F3	3314	Sd D&B4
F#3	3626	HH Reverse D&B
G3	2081	Agogo Lo
G#3	2081	Agogo Lo
A3	2060	CabasaA 1
A#3	2057	Maracas Slur
B3	1732	FxGun2
C4	1731	FxGun1
C#4	2084	Guiro Short
D4	2083	Guiro Long
D#4	2106	Claves1
E4	1718	Electric Perc8
F4	1712	Electric Perc2
F#4	1385	P50-1
G4	1723	Electric Perc13
G#4	1735	TurnTable
A4	1943	Triangle Open
A#4	1918	ShakerA 2
B4	1954	Sleigh Bell1
C5	1957	Wind Chime
C#5	3337	Sd Dist
D5	3341	Sd FM
D#5	3342	Sd FM Rim
E5	3344	Sd Clappy
F5	2664	Bd D&B1
F#5	3345	Sd Timbr
G5	2678	Bd Distortion5
G#5	3349	Sd Rim SE
A5	2677	Bd Distortion4
A#5	3320	Sd Hip3
B5	2691	Bd Slimy
C6	2680	Bd +HH

PDR 34 Acid Kit

Note	Wave Number	Wave Name
C0	2687	Bd Analog Tight
C#0	3298	Sd T8 Rim
D0	3309	Sd Jungle3
D#0	1945	Hand Clap1 St
E0	3293	Sd T8-1
F0	3857	Tom Syn1
F#0	2893	Sd BluesHeart L1-3
G0	2900	Sd BluesHeart 3R
G#0	2852	Sd SonA St1-3
A0	2496	Bd Funk St1-2
A#0	2836	Sd Basic St1-3
B0	2659	Bd Blip
C1	2647	Bd T9-4
C#1	3292	Sd T9Rim
D1	3341	Sd FM
D#1	2423	Clap T9
E1	3303	Sd AnCR
F1	3855	Tom T9 Lo
F#1	3627	HH Closed Tek
G1	3855	Tom T9 Lo
G#1	3627	HH Closed Tek
A1	3855	Tom T9 Lo
A#1	3628	HH Open Tek
B1	3854	Tom T9 Hi
C2	3854	Tom T9 Hi
C#2	3971	Crash T9
D2	3854	Tom T9 Hi
D#2	3975	Ride T9
E2	3871	Crash3
F2	3948	Ride Cup2 L
F#2	1929	Tambourine1 Hit
G2	3871	Crash3
G#2	2109	Cowbell1
A2	3966	Splash1 RL
A#2	2428	Cowbell T8
B2	3951	Ride Mono
C3	2007	Bongo1 Hi 1Fingr 1-2
C#3	2020	Bongo1 Lo 3Fingr 1-2
D3	1966	Conga1 Hi Tip
D#3	1972	Conga1 Hi Slap Open
E3	1970	Conga1 Hi Open 2
F3	2034	Timbale1 Hi 1
F#3	2034	Timbale1 Hi 1
G3	2080	Agogo Hi
G#3	2081	Agogo Lo
A3	2060	CabasaA 1
A#3	2057	Maracas Slur
B3	1732	FxGun2
C4	1731	FxGun1
C#4	1748	Scratch H
D4	1750	Scratch Down
D#4	1726	Hi Q1
E4	1726	Hi Q1
F4	1727	Hi Q2
F#4	1749	Scratch L
G4	1749	Scratch L
G#4	1944	Triangle Mute
A4	1943	Triangle Open
A#4	2432	Analog Shaker
B4	1954	Sleigh Bell1
C5	1957	Wind Chime
C#5	3290	Sd T9-5
D5	3290	Sd T9-5
D#5	3290	Sd T9-5
E5	3290	Sd T9-5
F5	2657	Bd Human1
F#5	3311	Sd D&B1
G5	1886	Acoustic Bass FX03
G#5	1428	DigiOsc4
A5	1427	DigiOsc3
A#5	3327	Sd Break1
B5	2661	Bd Jungle1
C6	2672	Bd Break Heavy

PDR 35 Jungle Kit

Note	Wave Number	Wave Name
C0	2662	Bd Jungle2
C#0	2955	Sd Mid Rim
D0	3309	Sd Jungle3
D#0	3309	Sd Jungle3
E0	2952	Sd Piccolo Rim1
F0	3204	Sd Roll Mono
F#0	3346	Sd Wood
G0	3317	Sd R&B2
G#0	3312	Sd D&B2
A0	2662	Bd Jungle2
A#0	3310	Sd JungleFX
B0	2651	Bd T8-1
C1	2661	Bd Jungle1
C#1	3325	Sd Hip Rim4
D1	3308	Sd Jungle2
D#1	3310	Sd JungleFX
E1	3309	Sd Jungle3
F1	3652	Tom Floor L
F#1	3439	HH Closed Rock Sw R
G1	3648	Tom Low L
G#1	3447	HH Pedal Rock Sw R
A1	3645	Tom Mid R
A#1	3462	HH Open Rock Sw R
B1	3645	Tom Mid R
C2	3641	Tom Hi R
C#2	3868	Crash2 L
D2	3641	Tom Hi R
D#2	3913	Ride2 R
E2	3958	China2
F2	3952	Ride Cup Mono
F#2	1929	Tambourine1 Hit
G2	3871	Crash3
G#2	2109	Cowbell1
A2	3867	Crash2 St
A#2	1940	Vibraslap1
B2	3907	Ride1 St
C3	2007	Bongo1 Hi 1Fingr 1-2
C#3	2020	Bongo1 Lo 3Fingr 1-2
D3	1966	Conga1 Hi Tip
D#3	1972	Conga1 Hi Slap Open
E3	1970	Conga1 Hi Open 2
F3	2142	Tabla Nah
F#3	2141	Tabla Bya
G3	2081	Agogo Lo
G#3	2081	Agogo Lo
A3	2060	CabasaA 1
A#3	2057	Maracas Slur
B3	2034	Timbale1 Hi 1
C4	2038	Timbale1 Lo 1
C#4	2084	Guiro Short
D4	2083	Guiro Long
D#4	2106	Claves1
E4	1939	Wood Block
F4	1939	Wood Block
F#4	2006	Cuica Hi
G4	2005	Cuica Lo
G#4	1944	Triangle Mute
A4	1943	Triangle Open
A#4	1918	ShakerA 2
B4	1954	Sleigh Bell1
C5	1957	Wind Chime
C#5	3626	HH Reverse D&B
D5	1747	RainLoop
D#5	1748	Scratch H
E5	1749	Scratch L
F5	2660	Bd BlpHd
F#5	3343	Sd Syn
G5	1707	IndusTom
G#5	2073	Pandeiro Open
A5	1703	Ripper
A#5	1742	TelRing
B5	1754	Scratch Lo R
C6	1730	Tape Rewind

PDR 36 Electric Kit

Note	Wave Number	Wave Name
C0	2655	Bd AnCR
C#0	2659	Bd Blip
D0	3297	Sd T8-5
D#0	2424	Clap AnSm
E0	3323	Sd Hip Rim2
F0	3204	Sd Roll Mono
F#0	3293	Sd T8-1
G0	3303	Sd AnCR
G#0	3294	Sd T8-2
A0	2651	Bd T8-1
A#0	3296	Sd T8-4
B0	2659	Bd Blip
C1	2652	Bd T8-2
C#1	3298	Sd T8 Rim
D1	3295	Sd T8-3
D#1	2423	Clap T9
E1	2424	Clap AnSm
F1	3858	Tom Syn2
F#1	3614	HH Closed T8-2
G1	3858	Tom Syn2
G#1	3613	HH Open T8-1
A1	3858	Tom Syn2
A#1	3615	HH Open T8-2
B1	3858	Tom Syn2
C2	3858	Tom Syn2
C#2	3971	Crash T9
D2	3858	Tom Syn2
D#2	3975	Ride T9
E2	3871	Crash3
F2	3973	Crash Syn
F#2	3972	Crash T8
G2	3871	Crash3
G#2	3349	Sd Rim SE
A2	3867	Crash2 St
A#2	2428	Cowbell T8
B2	3973	Crash Syn
C3	3856	Tom T8
C#3	3856	Tom T8
D3	3856	Tom T8
D#3	3856	Tom T8
E3	3856	Tom T8
F3	1746	Applause
F#3	1737	Door Squeak
G3	1738	Heart Beat
G#3	1729	Bomb
A3	3633	HH Open Lo-Fi
A#3	1917	ShakerA 1
B3	1710	Zap2
C4	1709	Zap1
C#4	1748	Scratch H
D4	1749	Scratch L
D#4	1726	Hi Q1
E4	1726	Hi Q1
F4	1727	Hi Q2
F#4	1749	Scratch L
G4	1605	Hit Orchestra2
G#4	3636	HH Closed FX
A4	3637	HH Open FX
A#4	2432	Analog Shaker
B4	2432	Analog Shaker
C5	1735	TurnTable
C#5	3331	Sd Break Roll
D5	1504	FM Bass5
D#5	1553	Mind Bell
E5	3328	Sd Break2
F5	2523	Bd Rock2 St
F#5	1659	Radio Noise
G5	1703	Ripper
G#5	1708	Noise Burst
A5	1762	Scratch Spin
A#5	1673	Bell Choir
B5	1546	Hi-Lo
C6	1659	Radio Noise

PDR 37 Human Kit

Note	Wave Number	Wave Name
C0	2657	Bd Human1
C#0	1759	Scratch Vo F
D0	1604	Hit Uhh
D#0	1760	Scratch Vo R
E0	3310	Sd JungleFX
F0	3195	Sd RockRoll St
F#0	3327	Sd Break1
G0	3303	Sd AnCR
G#0	3286	Sd T9-1
A0	2684	Bd Sustain
A#0	3180	Sd Hip Stick1
B0	2658	Bd Human2
C1	2658	Bd Human2
C#1	3346	Sd Wood
D1	3305	Sd Human1
D#1	3339	Sd Garg H
E1	3306	Sd Human2
F1	2657	Bd Human1
F#1	3638	HH Open Human
G1	2657	Bd Human1
G#1	3638	HH Open Human
A1	2657	Bd Human1
A#1	3638	HH Open Human
B1	2657	Bd Human1
C2	2657	Bd Human1
C#2	1708	Noise Burst
D2	2657	Bd Human1
D#2	3972	Crash T8
E2	3958	China2
F2	3952	Ride Cup Mono
F#2	1758	Scratch Sd R
G2	3963	Splash1 St
G#2	1606	Vox Drum
A2	3872	Crash4
A#2	2436	Electric Tambourine2
B2	1603	Stab Aah
C3	2007	Bongo1 Hi 1Fingr 1-2
C#3	2020	Bongo1 Lo 3Fingr 1-2
D3	1966	Conga1 Hi Tip
D#3	1972	Conga1 Hi Slap Open
E3	1970	Conga1 Hi Open 2
F3	2033	Timbale1 Hi 1-3
F#3	2037	Timbale1 Lo 1-2
G3	2081	Agogo Lo
G#3	2081	Agogo Lo
A3	2060	CabasaA 1
A#3	2057	Maracas Slur
B3	1732	FxGun2
C4	1729	Bomb
C#4	1748	Scratch H
D4	1750	Scratch Down
D#4	1753	Scratch Lo F
E4	1754	Scratch Lo R
F4	1727	Hi Q2
F#4	1749	Scratch L
G4	1749	Scratch L
G#4	1944	Triangle Mute
A4	1943	Triangle Open
A#4	1918	ShakerA 2
B4	1954	Sleigh Bell1
C5	1735	TurnTable
C#5	2938	Sd Rock Rim1 R
D5	1739	Helicopter
D#5	1601	Stab Hard
E5	3167	Sd Gate1
F5	2520	Bd Rock1 St
F#5	1750	Scratch Down
G5	2654	Bd AnSm
G#5	1554	Sonar1
A5	2178	Wa Taiko
A#5	2178	Wa Taiko
B5	1596	HH Hit
C6	1602	Stab Organ2

PDR 38 Hard Kit

Note	Wave Number	Wave Name
C0	2676	Bd Distortion3
C#0	3346	Sd Wood
D0	3167	Sd Gate1
D#0	1945	Hand Clap1 St
E0	3168	Sd Gate2
F0	3204	Sd Roll Mono
F#0	3336	Sd ClapAna
G0	3320	Sd Hip3
G#0	1703	Ripper
A0	2679	Bd Distortion RM
A#0	3298	Sd T8 Rim
B0	2675	Bd Distortion2
C1	2674	Bd Distortion1
C#1	2955	Sd Mid Rim
D1	3337	Sd Dist
D#1	1708	Noise Burst
E1	3333	Sd FX2
F1	3861	Tom Dist Lo
F#1	3610	HH Closed T9
G1	3861	Tom Dist Lo
G#1	3611	HH Open T9
A1	3861	Tom Dist Lo
A#1	3611	HH Open T9
B1	3860	Tom Dist Hi
C2	3860	Tom Dist Hi
C#2	3971	Crash T9
D2	3860	Tom Dist Hi
D#2	3975	Ride T9
E2	3958	China2
F2	3952	Ride Cup Mono
F#2	2434	Tambourine AnCR
G2	3871	Crash3
G#2	2428	Cowbell T8
A2	3867	Crash2 St
A#2	1940	Vibraslap1
B2	3907	Ride1 St
C3	3345	Sd Timbr
C#3	3345	Sd Timbr
D3	1966	Conga1 Hi Tip
D#3	1972	Conga1 Hi Slap Open
E3	1970	Conga1 Hi Open 2
F3	2680	Bd +HH
F#3	2680	Bd +HH
G3	1704	Glass
G#3	1704	Glass
A3	2060	CabasaA 1
A#3	2057	Maracas Slur
B3	1732	FxGun2
C4	1731	FxGun1
C#4	1748	Scratch H
D4	1750	Scratch Down
D#4	1726	Hi Q1
E4	1726	Hi Q1
F4	1727	Hi Q2
F#4	1749	Scratch L
G4	1749	Scratch L
G#4	1944	Triangle Mute
A4	1943	Triangle Open
A#4	2432	Analog Shaker
B4	1954	Sleigh Bell1
C5	1957	Wind Chime
C#5	3337	Sd Dist
D5	3341	Sd FM
D#5	3342	Sd FM Rim
E5	3344	Sd Clappy
F5	2681	Bd FxHammer
F#5	1707	IndusTom
G5	2664	Bd D&B1
G#5	1707	IndusTom
A5	2533	Bd Room3
A#5	1707	IndusTom
B5	2647	Bd T9-4
C6	3347	Sd Hammer

PDR 39 Distorted Kit

Note	Wave Number	Wave Name
C0	2441	Analog Click
C#0	3205	Sd Brush Soft St
D0	3217	Sd Brush Swir St
D#0	3208	Sd Brush Med St
E0	3220	Sd Brush SwirAtt St
F0	3201	Sd LiveRoll St
F#0	1935	Castanet1
G0	2804	Sd Normal 1St
G#0	1933	Stick1
A0	2525	Bd Rock2 R
A#0	2907	Sd Tight 1St
B0	2670	Bd Break1
C1	2525	Bd Rock2 R
C#1	3179	Sd Rock Stick2 R
D1	2863	Sd SonA 1L
D#1	1946	Hand Clap1 L
E1	2952	Sd Piccolo Rim1
F1	3853	Tom Ambience Lo
F#1	3450	HH Closed Rock 2R
G1	3853	Tom Ambience Lo
G#1	3454	HH Pedal Rock R
A1	3853	Tom Ambience Lo
A#1	3464	HH Open Rock R
B1	3852	Tom Ambience Hi
C2	3852	Tom Ambience Hi
C#2	3868	Crash2 L
D2	3852	Tom Ambience Hi
D#2	3913	Ride2 R
E2	3955	China1 L
F2	3949	Ride Cup2 R
F#2	1927	Tambourine1 Sw
G2	3965	Splash1 R
G#2	2116	Mambo Bell2
A2	3868	Crash2 L
A#2	1940	Vibraslap1
B2	3910	Ride1 RL
C3	2007	Bongo1 Hi 1Fingr 1-2
C#3	2020	Bongo1 Lo 3Fingr 1-2
D3	1966	Conga1 Hi Tip
D#3	1972	Conga1 Hi Slap Open
E3	1970	Conga1 Hi Open 2
F3	2033	Timbale1 Hi 1-3
F#3	2037	Timbale1 Lo 1-2
G3	2080	Agogo Hi
G#3	2081	Agogo Lo
A3	2059	CabasaA 1-2
A#3	2057	Maracas Slur
B3	2108	Whistle
C4	2108	Whistle
C#4	2084	Guiro Short
D4	2083	Guiro Long
D#4	2106	Claves1
E4	1939	Wood Block
F4	1939	Wood Block
F#4	1768	Scratch Combi2
G4	1752	Scratch Hi R
G#4	1944	Triangle Mute
A4	1943	Triangle Open
A#4	1917	ShakerA 1
B4	1954	Sleigh Bell1
C5	1957	Wind Chime
C#5	2951	Sd Piccolo
D5	3172	Sd Heavy
D#5	3336	Sd ClapAna
E5	2952	Sd Piccolo Rim1
F5	2532	Bd Room2
F#5	2954	Sd Mid
G5	2533	Bd Room3
G#5	2955	Sd Mid Rim
A5	2642	Bd Gate
A#5	3167	Sd Gate1
B5	2643	Bd FX Gate
C6	2664	Bd D&B1

PDR 40 Ambient Kit

Note	Wave Number	Wave Name
C0	2659	Bd Blip
C#0	1727	Hi Q2
D0	2953	Sd Piccolo Rim2
D#0	1726	Hi Q1
E0	3303	Sd AnCR
F0	3857	Tom Syn1
F#0	3634	HH Closed Syn
G0	3857	Tom Syn1
G#0	3636	HH Closed FX
A0	3858	Tom Syn2
A#0	3635	HH Open Syn
B0	2655	Bd AnCR
C1	2644	Bd T9-1
C#1	3182	Sd Hip Stick3
D1	3307	Sd Jungle1
D#1	2423	Clap T9
E1	3307	Sd Jungle1
F1	3856	Tom T8
F#1	3614	HH Closed T8-2
G1	3856	Tom T8
G#1	3613	HH Open T8-1
A1	3856	Tom T8
A#1	3615	HH Open T8-2
B1	3856	Tom T8
C2	3856	Tom T8
C#2	3973	Crash Syn
D2	3856	Tom T8
D#2	3975	Ride T9
E2	3871	Crash3
F2	3952	Ride Cup Mono
F#2	1929	Tambourine1 Hit
G2	3871	Crash3
G#2	2428	Cowbell T8
A2	3867	Crash2 St
A#2	1940	Vibraslap1
B2	3907	Ride1 St
C3	2007	Bongo1 Hi 1Fingr 1-2
C#3	2020	Bongo1 Lo 3Fingr 1-2
D3	1966	Conga1 Hi Tip
D#3	1972	Conga1 Hi Slap Open
E3	1970	Conga1 Hi Open 2
F3	2033	Timbale1 Hi 1-3
F#3	2037	Timbale1 Lo 1-2
G3	1704	Glass
G#3	1704	Glass
A3	2060	CabasaA 1
A#3	2437	MaracasT8
B3	1743	Bird
C4	1557	Engine Room St
C#4	1724	Electric Perc14
D4	1745	Gunshot
D#4	2439	Claves T8
E4	1939	Wood Block
F4	1939	Wood Block
F#4	2434	Tambourine AnCR
G4	2430	Cowbell AnCR
G#4	1944	Triangle Mute
A4	1943	Triangle Open
A#4	2432	Analog Shaker
B4	1954	Sleigh Bell1
C5	1957	Wind Chime
C#5	3297	Sd T8-5
D5	1554	Sonar1
D#5	3297	Sd T8-5
E5	1554	Sonar1
F5	1608	Bubble
F#5	3297	Sd T8-5
G5	1608	Bubble
G#5	3297	Sd T8-5
A5	1544	Eery
A#5	3297	Sd T8-5
B5	1607	FX Chime
C6	1607	FX Chime

PDR 41 Garage Kit

Note	Wave Number	Wave Name
C0	2686	Bd Hard Long
C#0	2644	Bd T9-1
D0	2691	Bd Slimy
D#0	2688	Bd AnaHard
E0	2677	Bd Distortion4
F0	2698	Bd ElecComp3
F#0	2668	Bd Hip Deep
G0	2681	Bd FxHammer
G#0	2646	Bd T9-3
A0	2653	Bd T8-3
A#0	2684	Bd Sustain
B0	2667	Bd R&B2
C1	2648	Bd T9 Hd1
C#1	2691	Bd Slimy
D1	3293	Sd T8-1
D#1	3298	Sd T8 Rim
E1	3344	Sd Clappy
F1	2877	Sd Blues 3St
F#1	3410	HH Open 2St
G1	3614	HH Closed T8-2
G#1	3410	HH Open 2St
A1	3615	HH Open T8-2
A#1	3410	HH Open 2St
B1	3615	HH Open T8-2
C2	2424	Clap AnSm
C#2	3867	Crash2 St
D2	3971	Crash T9
D#2	3907	Ride1 St
E2	3975	Ride T9
F2	2441	Analog Click
F#2	2439	Claves T8
G2	2424	Clap AnSm
G#2	2423	Clap T9
A2	2432	Analog Shaker
A#2	2427	Conga T8
B2	2427	Conga T8
C3	3303	Sd AnCR
C#3	3195	Sd RockRoll St
D3	2080	Agogo Hi
D#3	3957	China1 RL
E3	1727	Hi Q2
F3	1726	Hi Q1
F#3	1710	Zap2
G3	1709	Zap1
G#3	1710	Zap2
A3	1737	Door Squeak
A#3	1769	Scratch Combi3
B3	1849	AcousticGtr FX27 St
C4	567	Play FX Mix
C#4	1751	Scratch Hi F
D4	192	Wurli EP Hard+
D#4	192	Wurli EP Hard+
E4	192	Wurli EP Hard+
F4	1612	Resonance X-Fade
F#4	1554	Sonar1
G4	1606	Vox Drum
G#4	1606	Vox Drum
A4	1606	Vox Drum
A#4	3635	HH Open Syn
B4	3634	HH Closed Syn
C5	1387	Tri Wave
C#5	1387	Tri Wave
D5	1387	Tri Wave
D#5	1387	Tri Wave
E5	1387	Tri Wave
F5	1387	Tri Wave
F#5	1387	Tri Wave
G5	1387	Tri Wave
G#5	1387	Tri Wave
A5	1387	Tri Wave
A#5	1387	Tri Wave
B5	1387	Tri Wave
C6	1387	Tri Wave

PDR 42 Synth Pop Kit

Note	Wave Number	Wave Name
C0	2712	Bd HipHop8
C#0	2644	Bd T9-1
D0	2659	Bd Blip
D#0	2673	Bd Break Hard
E0	2699	Bd ElecFX1
F0	2701	Bd ElecGate
F#0	2700	Bd ElecFX2
G0	2675	Bd Distortion2
G#0	2690	Bd ThickSkin
A0	2697	Bd ElecComp2
A#0	2693	Bd Elec2
B0	2702	Bd ElecClick
C1	2702	Bd ElecClick
C#1	3292	Sd T9Rim
D1	3285	Sd Elec12
D#1	2423	Clap T9
E1	3281	Sd Elec8
F1	3855	Tom T9 Lo
F#1	3610	HH Closed T9
G1	3855	Tom T9 Lo
G#1	3611	HH Open T9
A1	3855	Tom T9 Lo
A#1	3611	HH Open T9
B1	3854	Tom T9 Hi
C2	3854	Tom T9 Hi
C#2	3971	Crash T9
D2	3854	Tom T9 Hi
D#2	3975	Ride T9
E2	3971	Crash T9
F2	3975	Ride T9
F#2	2436	Electric Tambourine2
G2	3971	Crash T9
G#2	2431	Electric Cowbell
A2	3971	Crash T9
A#2	2435	Electric Tambourine1
B2	3975	Ride T9
C3	1715	Electric Perc5
C#3	1714	Electric Perc4
D3	1722	Electric Perc12
D#3	1716	Electric Perc6
E3	1711	Electric Perc1
F3	1705	Bell FX1
F#3	1706	Bell FX2
G3	1765	Scratch Attack
G#3	1766	Scratch R&B
A3	2059	CabasaA 1-2
A#3	2057	Maracas Slur
B3	1724	Electric Perc14
C4	1725	Electric Perc15
C#4	1924	Shaker Hip2
D4	1713	Electric Perc3
D#4	1717	Electric Perc7
E4	1718	Electric Perc8
F4	1719	Electric Perc9
F#4	1720	Electric Perc10
G4	1723	Electric Perc13
G#4	1944	Triangle Mute
A4	1943	Triangle Open
A#4	2438	Electric Maracas
B4	2440	Electric Triangle
C5	1721	Electric Perc11
C#5	3274	Sd Elec1
D5	3282	Sd Elec9
D#5	3283	Sd Elec10
E5	3284	Sd Elec11
F5	3275	Sd Elec2
F#5	3276	Sd Elec3
G5	3277	Sd Elec4
G#5	3278	Sd Elec5
A5	3279	Sd Elec6
A#5	3280	Sd Elec7
B5	2425	Electric Clap1
C6	2426	Electric Clap2

PDR 43 Orchestra Kit

Note	Wave Number	Wave Name
C0	2441	Analog Click
C#0	3209	Sd Brush Med L
D0	3219	Sd Brush Swir R
D#0	3209	Sd Brush Med L
E0	3222	Sd Brush SwirAtt R
F0	3256	Sd Orch Roll St
F#0	1935	Castanet1
G0	3224	Sd OrchA 1 St
G#0	1933	Stick1
A0	2621	Bd GranCasaA Mute St
A#0	3229	Sd OrchA 2 L
B0	2621	Bd GranCasaA Mute St
C1	2618	Bd GranCasaA Open St
C#1	3192	Sd Closed Rim R
D1	3225	Sd OrchA 2 St
D#1	1945	Hand Clap1 St
E1	3234	Sd OrchB 2 St
F1	251	Timpani1 Sw St
F#1	3372	HH Closed 1-4St
G1	251	Timpani1 Sw St
G#1	3397	HH Pedal 1-3 R
A1	251	Timpani1 Sw St
A#1	3408	HH Open 1-2St
B1	251	Timpani1 Sw St
C2	251	Timpani1 Sw St
C#2	3901	Hand Cymbal Open St
D2	251	Timpani1 Sw St
D#2	3907	Ride1 St
E2	3954	China1 St
F2	3935	Ride Cup1 St
F#2	1929	Tambourine1 Hit
G2	3904	Hand Cymbal Mute St
G#2	2110	Cowbell2
A2	3863	Crash1 St
A#2	1940	Vibraslap1
B2	3911	Ride2 St
C3	2007	Bongo1 Hi 1Fingr 1-2
C#3	2020	Bongo1 Lo 3Fingr 1-2
D3	1966	Conga1 Hi Tip
D#3	1970	Conga1 Hi Open 2
E3	2001	Tumba Open
F3	2033	Timbale1 Hi 1-3
F#3	2037	Timbale1 Lo 1-2
G3	2080	Agogo Hi
G#3	2081	Agogo Lo
A3	2059	CabasaA 1-2
A#3	2057	Maracas Slur
B3	2108	Whistle
C4	2108	Whistle
C#4	2084	Guiro Short
D4	2083	Guiro Long
D#4	2106	Claves1
E4	1939	Wood Block
F4	1939	Wood Block
F#4	2006	Cuica Hi
G4	2005	Cuica Lo
G#4	1944	Triangle Mute
A4	1943	Triangle Open
A#4	1917	ShakerA 1
B4	1954	Sleigh Bell1
C5	1957	Wind Chime
C#5	1939	Wood Block
D5	1939	Wood Block
D#5	1939	Wood Block
E5	1939	Wood Block
F5	1939	Wood Block
F#5	1939	Wood Block
G5	1939	Wood Block
G#5	1939	Wood Block
A5	1939	Wood Block
A#5	1939	Wood Block
B5	1939	Wood Block
C6	1939	Wood Block

PDR 44 Drum Machines Kit

Note	Wave Number	Wave Name
C0	2686	Bd Hard Long
C#0	2685	Bd TekPower
D0	2678	Bd Distortion5
D#0	2676	Bd Distortion3
E0	2674	Bd Distortion1
F0	2664	Bd D&B1
F#0	2659	Bd Blip
G0	2654	Bd AnSm
G#0	2652	Bd T8-2
A0	2653	Bd T8-3
A#0	2650	Bd T9 Hd3
B0	2645	Bd T9-2
C1	2646	Bd T9-3
C#1	3292	Sd T9Rim
D1	3286	Sd T9-1
D#1	2423	Clap T9
E1	3289	Sd T9-4
F1	3855	Tom T9 Lo
F#1	3610	HH Closed T9
G1	3855	Tom T9 Lo
G#1	3611	HH Open T9
A1	3855	Tom T9 Lo
A#1	3611	HH Open T9
B1	3855	Tom T9 Lo
C2	3855	Tom T9 Lo
C#2	3971	Crash T9
D2	2427	Conga T8
D#2	3975	Ride T9
E2	2427	Conga T8
F2	2441	Analog Click
F#2	2439	Claves T8
G2	2437	MaracasT8
G#2	2434	Tambourine AnCR
A2	2432	Analog Shaker
A#2	2428	Cowbell T8
B2	2430	Cowbell AnCR
C3	3293	Sd T8-1
C#3	3294	Sd T8-2
D3	3295	Sd T8-3
D#3	3303	Sd AnCR
E3	3307	Sd Jungle1
F3	3311	Sd D&B1
F#3	3318	Sd Hip1
G3	3315	Sd R&B1
G#3	3317	Sd R&B2
A3	3318	Sd Hip1
A#3	3346	Sd Wood
B3	3345	Sd Timbr
C4	3612	HH Closed T8-1
C#4	3613	HH Open T8-1
D4	3614	HH Closed T8-2
D#4	3615	HH Open T8-2
E4	3403	HH Pedal 3 R
F4	3416	HH Open 2R
F#4	3416	HH Open 2R
G4	3632	HH Closed Lo-Fi
G#4	3633	HH Open Lo-Fi
A4	3634	HH Closed Syn
A#4	3635	HH Open Syn
B4	2432	Analog Shaker
C5	2433	Tambourine RX5
C#5	2433	Tambourine RX5
D5	2431	Electric Cowbell
D#5	2427	Conga T8
E5	2440	Electric Triangle
F5	2439	Claves T8
F#5	2432	Analog Shaker
G5	2425	Electric Clap1
G#5	2426	Electric Clap2
A5	2434	Tambourine AnCR
A#5	2428	Cowbell T8
B5	2441	Analog Click
C6	2429	Cowbell RX11

PDR 45 Rock Multiple Kits

Note	Wave Number	Wave Name
C0	2487	Bd Normal St1-2
C#0	3174	Sd Rock Stick1 St
D0	2939	Sd Rock Open2 St
D#0	3195	Sd RockRoll St
E0	2930	Sd Rock Open1 St
F0	3647	Tom Low St
F#0	3420	HH Closed Foot St
G0	3647	Tom Low St
G#0	3395	HH Pedal 3 St
A0	3643	Tom Mid St
A#0	3410	HH Open 2St
B0	3639	Tom Hi St
C1	2523	Bd Rock2 St
C#1	3174	Sd Rock Stick1 St
D1	2939	Sd Rock Open2 St
D#1	1945	Hand Clap1 St
E1	2942	Sd Rock Mute2 St
F1	3663	Tom Rock Low St
F#1	3432	HH Closed Rock Sw St
G1	3663	Tom Rock Low St
G#1	3444	HH Pedal Rock Sw St
A1	3659	Tom Rock Mid St
A#1	3456	HH Open Rock Sw St
B1	3659	Tom Rock Mid St
C2	3655	Tom Rock Hi St
C#2	3867	Crash2 St
D2	3655	Tom Rock Hi St
D#2	3907	Ride1 St
E2	3954	China1 St
F2	3935	Ride Cup1 St
F#2	1927	Tambourine1 Sw
G2	3963	Splash1 St
G#2	2109	Cowbell1
A2	3867	Crash2 St
A#2	1917	ShakerA 1
B2	3907	Ride1 St
C3	2520	Bd Rock1 St
C#3	3177	Sd Rock Stick2 St
D3	2930	Sd Rock Open1 St
D#3	2423	Clap T9
E3	2933	Sd Rock Mute1 St
F3	3663	Tom Rock Low St
F#3	3432	HH Closed Rock Sw St
G3	3663	Tom Rock Low St
G#3	3452	HH Pedal Rock St
A3	3659	Tom Rock Mid St
A#3	3460	HH Half Open Rock St
B3	3659	Tom Rock Mid St
C4	3655	Tom Rock Hi St
C#4	3867	Crash2 St
D4	3655	Tom Rock Hi St
D#4	3912	Ride2 L
E4	3954	China1 St
F4	3935	Ride Cup1 St
F#4	1929	Tambourine1 Hit
G4	3963	Splash1 St
G#4	2116	Mambo Bell2
A4	3867	Crash2 St
A#4	2152	Shekere Down
B4	3913	Ride2 R
C5	2496	Bd Funk St1-2
C#5	3174	Sd Rock Stick1 St
D5	2936	Sd Rock Rim1 St
D#5	2948	Sd Rock Flam St
E5	2945	Sd Rock Rim2 St
F5	3651	Tom Floor St
F#5	3376	HH Closed 4St
G5	3647	Tom Low St
G#5	3395	HH Pedal 3 St
A5	3643	Tom Mid St
A#5	3428	HH Open2 St
B5	3643	Tom Mid St
C6	3639	Tom Hi St

PDR 46 HipHop Multiple Kits

Note	Wave Number	Wave Name
C0	2653	Bd T8-3
C#0	3298	Sd T8 Rim
D0	3358	Sd HipHop11
D#0	2423	Clap T9
E0	3356	Sd HipHop9
F0	2653	Bd T8-3
F#0	3627	HH Closed Tek
G0	2653	Bd T8-3
G#0	3628	HH Open Tek
A0	2653	Bd T8-3
A#0	3628	HH Open Tek
B0	2653	Bd T8-3
C1	2668	Bd Hip Deep
C#1	3183	Sd Hip Stick4
D1	3322	Sd Hip Rim1
D#1	2442	HipHop Clap1
E1	3319	Sd Hip2
F1	3856	Tom T8
F#1	3614	HH Closed T8-2
G1	3856	Tom T8
G#1	3620	HH Open AnCR
A1	3856	Tom T8
A#1	3613	HH Open T8-1
B1	3856	Tom T8
C2	3856	Tom T8
C#2	3971	Crash T9
D2	3856	Tom T8
D#2	3973	Crash Syn
E2	3973	Crash Syn
F2	3972	Crash T8
F#2	2433	Tambourine RX5
G2	3965	Splash1 R
G#2	2428	Cowbell T8
A2	3971	Crash T9
A#2	2430	Cowbell AnCR
B2	3975	Ride T9
C3	2668	Bd Hip Deep
C#3	3184	Sd Hip Stick5
D3	3323	Sd Hip Rim2
D#3	2443	HipHop Clap2
E3	3318	Sd Hip1
F3	3855	Tom T9 Lo
F#3	3616	HH Closed RX5
G3	3855	Tom T9 Lo
G#3	3619	HH Closed AnCR
A3	3855	Tom T9 Lo
A#3	3615	HH Open T8-2
B3	3855	Tom T9 Lo
C4	3854	Tom T9 Hi
C#4	3869	Crash2 R
D4	3854	Tom T9 Hi
D#4	3972	Crash T8
E4	3973	Crash Syn
F4	3972	Crash T8
F#4	1929	Tambourine1 Hit
G4	3956	China1 R
G#4	2429	Cowbell RX11
A4	3868	Crash2 L
A#4	2109	Cowbell1
B4	3913	Ride2 R
C5	2668	Bd Hip Deep
C#5	3369	Sd HipHop Rim4
D5	3351	Sd HipHop2
D#5	2443	HipHop Clap2
E5	3326	Sd Hip Rim5
F5	3861	Tom Dist Lo
F#5	3629	HH Closed Hip
G5	3861	Tom Dist Lo
G#5	3630	HH Pedal Hip
A5	3860	Tom Dist Hi
A#5	3631	HH Open Hip
B5	3860	Tom Dist Hi
C6	3860	Tom Dist Hi

PDR 47 Percussion Kit

Note	Wave Number	Wave Name
C0	2178	Wa Taiko
C#0	2220	Udu High
D0	2133	Djembe1 Open
D#0	1997	Quinto1 Open
E0	2221	Udu Low
F0	2219	Udu Finger
F#0	2220	Udu High
G0	2141	Tabla Bya
G#0	2077	Tmbourim Open
A0	2143	Tabla Mute
A#0	2142	Tabla Nah
B0	2143	Tabla Mute
C1	251	Timpani1 Sw St
C#1	1604	Hit Uhh
D1	2007	Bongo1 Hi 1Fingr 1-2
D#1	2423	Clap T9
E1	1944	Triangle Mute
F1	1943	Triangle Open
F#1	1935	Castanet1
G1	1935	Castanet1
G#1	1935	Castanet1
A1	2083	Guiro Long
A#1	2085	Guiro Swp
B1	2084	Guiro Short
C2	1940	Vibraslap1
C#2	2106	Claves1
D2	2439	Claves T8
D#2	2005	Cuica Lo
E2	2006	Cuica Hi
F2	2037	Timbale1 Lo 1-2
F#2	1939	Wood Block
G2	2039	Timbale1 Lo 2
G#2	1939	Wood Block
A2	2033	Timbale1 Hi 1-3
A#2	2119	ChaCha Bell
B2	2035	Timbale1 Hi 2
C3	2042	Timbale1 Paila L
C#3	2042	Timbale1 Paila L
D3	2041	Timbale1 Paila H
D#3	2115	Mambo Bell1
E3	2020	Bongo1 Lo 3Fingr 1-2
F3	2020	Bongo1 Lo 3Fingr 1-2
F#3	1952	Handbell L
G3	2007	Bongo1 Hi 1Fingr 1-2
G#3	1953	Handbell H
A3	2007	Bongo1 Hi 1Fingr 1-2
A#3	2081	Agogo Lo
B3	2080	Agogo Hi
C4	1967	Conga1 Hi Heel
C#4	1966	Conga1 Hi Tip
D4	2002	Tumba Slap
D#4	2057	Maracas Slur
E4	2001	Tumba Open
F4	1967	Conga1 Hi Heel
F#4	1966	Conga1 Hi Tip
G4	1972	Conga1 Hi Slap Open
G#4	1917	ShakerA 1
A4	1970	Conga1 Hi Open 2
A#4	2060	CabasaA 1
B4	2059	CabasaA 1-2
C5	1967	Conga1 Hi Heel
C#5	1966	Conga1 Hi Tip
D5	1998	Quinto1 Slap
D#5	1917	ShakerA 1
E5	1999	Quinto2 Open
F5	2067	Caxixi 1-2
F#5	1928	Tambourine1 Shake
G5	1929	Tambourine1 Hit
G#5	1927	Tambourine1 Sw
A5	1929	Tambourine1 Hit
A#5	1954	Sleigh Bell1
B5	2108	Whistle
C6	2108	Whistle

PDR 48 Latin Percussion Kit

Note	Wave Number	Wave Name
C0	2514	Bd L Son St
C#0	3177	Sd Rock Stick2 St
D0	2821	Sd Funk St1/3
D#0	3867	Crash2 St
E0	3963	Splash1 St
F0	3647	Tom Low St
F#0	3372	HH Closed 1-4St
G0	3647	Tom Low St
G#0	3395	HH Pedal 3 St
A0	3643	Tom Mid St
A#0	3410	HH Open 2St
B0	3639	Tom Hi St
C1	1966	Conga1 Hi Tip
C#1	1967	Conga1 Hi Heel
D1	2002	Tumba Slap
D#1	2106	Claves1
E1	2001	Tumba Open
F1	1966	Conga1 Hi Tip
F#1	1967	Conga1 Hi Heel
G1	1972	Conga1 Hi Slap Open
G#1	1952	Handbell L
A1	1970	Conga1 Hi Open 2
A#1	1953	Handbell H
B1	2115	Mambo Bell1
C2	1966	Conga1 Hi Tip
C#2	1967	Conga1 Hi Heel
D2	1998	Quinto1 Slap
D#2	2119	ChaCha Bell
E2	1997	Quinto1 Open
F2	2020	Bongo1 Lo 3Fingr 1-2
F#2	2007	Bongo1 Hi 1Fingr 1-2
G2	2010	Bongo1 Hi 3Fingr 1-2
G#2	2038	Timbale1 Lo 1
A2	2042	Timbale1 Paila L
A#2	2034	Timbale1 Hi 1
B2	2041	Timbale1 Paila H
C3	1939	Wood Block
C#3	1939	Wood Block
D3	2152	Shekere Down
D#3	2153	Shekere Up
E3	2154	Shekere Slap
F3	2057	Maracas Slur
F#3	2058	Maracas Staccato
G3	2083	Guiro Long
G#3	2085	Guiro Swp
A3	2084	Guiro Short
A#3	2091	Surdo1 Mute
B3	2090	Surdo1 Open
C4	2075	Pandeiro Tip
C#4	2076	Pandeiro Heel
D4	2074	Pandeiro Thump
D#4	2073	Pandeiro Open
E4	2078	Tmbourim Finger
F4	2077	Tmbourim Open
F#4	2079	Tmbourim Mute
G4	2082	Agogo Lo Tap
G#4	2081	Agogo Lo
A4	2080	Agogo Hi
A#4	1943	Triangle Open
B4	1944	Triangle Mute
C5	1918	ShakerA 2
C#5	1917	ShakerA 1
D5	1919	ShakerA 3
D#5	2060	CabasaA 1
E5	2061	CabasaA 2
F5	2068	Caxixi 1
F#5	2069	Caxixi 2
G5	2005	Cuica Lo
G#5	2006	Cuica Hi
A5	2108	Whistle
A#5	2108	Whistle
B5	1940	Vibraslap1
C6	1957	Wind Chime

PDR 49 Guitar/Bass FX Kit

Note	Wave Number	Wave Name
C0	1889	Acoustic Bass FX06
C#0	1889	Acoustic Bass FX06
D0	567	Play FX Mix
D#0	566	Power Chord Mono
E0	566	Power Chord Mono
F0	1884	Acoustic Bass FX01
F#0	1774	AcousticGtr FX02 St
G0	1897	Electric Bass FX 05
G#0	1908	Electric Bass FX 16
A0	1893	Electric Bass FX 01
A#0	1866	ElectricGtr FX06
B0	1909	Electric Bass FX 17
C1	1896	Electric Bass FX 04
C#1	1902	Electric Bass FX 10
D1	567	Play FX Mix
D#1	1903	Electric Bass FX 11
E1	567	Play FX Mix
F1	1910	Electric Bass FX 18
F#1	1908	Electric Bass FX 16
G1	1910	Electric Bass FX 18
G#1	1909	Electric Bass FX 17
A1	1910	Electric Bass FX 18
A#1	1873	ElectricGtr FX13
B1	1910	Electric Bass FX 18
C2	1910	Electric Bass FX 18
C#2	1855	AcousticGtr FX29 St
D2	1910	Electric Bass FX 18
D#2	1903	Electric Bass FX 11
E2	1855	AcousticGtr FX29 St
F2	1903	Electric Bass FX 11
F#2	1902	Electric Bass FX 10
G2	1855	AcousticGtr FX29 St
G#2	567	Play FX Mix
A2	1855	AcousticGtr FX29 St
A#2	1905	Electric Bass FX 13
B2	1903	Electric Bass FX 11
C3	1902	Electric Bass FX 10
C#3	1902	Electric Bass FX 10
D3	1894	Electric Bass FX 02
D#3	1900	Electric Bass FX 08
E3	1910	Electric Bass FX 18
F3	1892	Acoustic Bass FX09
F#3	1892	Acoustic Bass FX09
G3	1890	Acoustic Bass FX07
G#3	1890	Acoustic Bass FX07
A3	1889	Acoustic Bass FX06
A#3	1892	Acoustic Bass FX09
B3	567	Play FX Mix
C4	567	Play FX Mix
C#4	1914	Electric Bass FX 22
D4	1786	AcousticGtr FX06 St
D#4	1908	Electric Bass FX 16
E4	1908	Electric Bass FX 16
F4	1895	Electric Bass FX 03
F#4	567	Play FX Mix
G4	567	Play FX Mix
G#4	1903	Electric Bass FX 11
A4	1909	Electric Bass FX 17
A#4	1774	AcousticGtr FX02 St
B4	1906	Electric Bass FX 14
C5	1881	ElectricGtr FX21
C#5	1880	ElectricGtr FX20
D5	1879	ElectricGtr FX19
D#5	567	Play FX Mix
E5	567	Play FX Mix
F5	567	Play FX Mix
F#5	567	Play FX Mix
G5	667	Electric Bass FX
G#5	1914	Electric Bass FX 22
A5	1897	Electric Bass FX 05
A#5	1907	Electric Bass FX 15
B5	667	Electric Bass FX
C6	1911	Electric Bass FX 19

PDR 50 Wacko Kit

Note	Wave Number	Wave Name
C0	1893	Electric Bass FX 01
C#0	1710	Zap2
D0	3624	HH Pedal D&B
D#0	1946	Hand Clap1 L
E0	1759	Scratch Vo F
F0	1707	IndusTom
F#0	3346	Sd Wood
G0	1707	IndusTom
G#0	3336	Sd ClapAna
A0	1707	IndusTom
A#0	3342	Sd FM Rim
B0	2643	Bd FX Gate
C1	2681	Bd FxHammer
C#1	1972	Conga1 Hi Slap Open
D1	3341	Sd FM
D#1	1946	Hand Clap1 L
E1	3345	Sd Timbr
F1	3858	Tom Syn2
F#1	3634	HH Closed Syn
G1	3858	Tom Syn2
G#1	3635	HH Open Syn
A1	3858	Tom Syn2
A#1	3635	HH Open Syn
B1	3858	Tom Syn2
C2	3858	Tom Syn2
C#2	3469	HH Open Mono
D2	1554	Sonar1
D#2	3613	HH Open T8-1
E2	3469	HH Open Mono
F2	3948	Ride Cup2 L
F#2	1954	Sleigh Bell1
G2	3615	HH Open T8-2
G#2	1612	Resonance X-Fade
A2	3868	Crash2 L
A#2	1747	RainLoop
B2	3949	Ride Cup2 R
C3	1548	AirHose L
C#3	1548	AirHose L
D3	2220	Udu High
D#3	1480	Mg Bass2
E3	1482	Mg Bass3
F3	1889	Acoustic Bass FX06
F#3	1889	Acoustic Bass FX06
G3	2081	Agogo Lo
G#3	2081	Agogo Lo
A3	3638	HH Open Human
A#3	1728	Vox Hit Rev
B3	1726	Hi Q1
C4	1726	Hi Q1
C#4	1660	LFO Seq
D4	1660	LFO Seq
D#4	1541	BellAir
E4	1596	HH Hit
F4	1596	HH Hit
F#4	1551	Ooh Feedback
G4	1551	Ooh Feedback
G#4	1553	Mind Bell
A4	1704	Glass
A#4	1734	Swarm
B4	1732	FxGun2
C5	1609	Lektronica
C#5	567	Play FX Mix
D5	1745	Gunshot
D#5	1736	Police
E5	1703	Ripper
F5	567	Play FX Mix
F#5	1730	Tape Rewind
G5	1731	FxGun1
G#5	1729	Bomb
A5	1710	Zap2
A#5	1708	Noise Burst
B5	1600	Stab Giant
C6	1599	Stab Orchestra

PDR 51 Wood Bits Kit

Note	Wave Number	Wave Name
C0	2439	Claves T8
C#0	3186	Sd Hip Stick6 L
D0	2083	Guiro Long
D#0	3187	Sd Hip Stick6 R
E0	2083	Guiro Long
F0	1807	AcousticGtr FX13 St
F#0	1935	Castanet1
G0	1903	Electric Bass FX 11
G#0	1933	Stick1
A0	1900	Electric Bass FX 08
A#0	1899	Electric Bass FX 07
B0	3854	Tom T9 Hi
C1	1909	Electric Bass FX 17
C#1	3194	Sd Closed Rim3
D1	1934	Stick2
D#1	2083	Guiro Long
E1	1934	Stick2
F1	2090	Surdo1 Open
F#1	3302	Sd AnSm Rim
G1	2090	Surdo1 Open
G#1	2424	Clap AnSm
A1	2090	Surdo1 Open
A#1	1940	Vibraslap1
B1	2090	Surdo1 Open
C2	2090	Surdo1 Open
C#2	1740	Seashore
D2	2090	Surdo1 Open
D#2	3177	Sd Rock Stick2 St
E2	1746	Applause
F2	3175	Sd Rock Stick1 L
F#2	1928	Tambourine1 Shake
G2	1740	Seashore
G#2	1939	Wood Block
A2	1746	Applause
A#2	1739	Helicopter
B2	3179	Sd Rock Stick2 R
C3	1972	Conga1 Hi Slap Open
C#3	1972	Conga1 Hi Slap Open
D3	1935	Castanet1
D#3	1935	Castanet1
E3	1939	Wood Block
F3	2042	Timbale1 Paila L
F#3	2042	Timbale1 Paila L
G3	1933	Stick1
G#3	1934	Stick2
A3	2067	Caxixi 1-2
A#3	2069	Caxixi 2
B3	1737	Door Squeak
C4	1737	Door Squeak
C#4	2084	Guiro Short
D4	2083	Guiro Long
D#4	2106	Claves1
E4	1939	Wood Block
F4	1939	Wood Block
F#4	1737	Door Squeak
G4	1737	Door Squeak
G#4	1939	Wood Block
A4	2106	Claves1
A#4	1737	Door Squeak
B4	1946	Hand Clap1 L
C5	2119	ChaCha Bell
C#5	2939	Sd Rock Open2 St
D5	2663	Bd Jungle3
D#5	1998	Quinto1 Slap
E5	2532	Bd Room2
F5	2511	Bd H Son St
F#5	3172	Sd Heavy
G5	2090	Surdo1 Open
G#5	3174	Sd Rock Stick1 St
A5	2691	Bd Slimy
A#5	3167	Sd Gate1
B5	2517	Bd Funk Son St
C6	2642	Bd Gate

PDR 52 Metal Bits Kit

Note	Wave Number	Wave Name
C0	2428	Cowbell T8
C#0	3386	HH Closed 4R
D0	3949	Ride Cup2 R
D#0	3635	HH Open Syn
E0	3948	Ride Cup2 L
F0	3935	Ride Cup1 St
F#0	1394	FM Metal2
G0	3907	Ride1 St
G#0	1717	Electric Perc7
A0	2110	Cowbell2
A#0	3373	HH Closed 1St
B0	2119	ChaCha Bell
C1	2110	Cowbell2
C#1	3634	HH Closed Syn
D1	3628	HH Open Tek
D#1	3614	HH Closed T8-2
E1	3616	HH Closed RX5
F1	2110	Cowbell2
F#1	3613	HH Open T8-1
G1	2110	Cowbell2
G#1	3634	HH Closed Syn
A1	2110	Cowbell2
A#1	3635	HH Open Syn
B1	2110	Cowbell2
C2	2110	Cowbell2
C#2	3637	HH Open FX
D2	2110	Cowbell2
D#2	3935	Ride Cup1 St
E2	3620	HH Open AnCR
F2	3935	Ride Cup1 St
F#2	1927	Tambourine1 Sw
G2	3637	HH Open FX
G#2	2116	Mambo Bell2
A2	3637	HH Open FX
A#2	1954	Sleigh Bell1
B2	3951	Ride Mono
C3	146	Brite Piano
C#3	146	Brite Piano
D3	320	Tubular Bell1
D#3	322	Bell
E3	325	Brass Bell
F3	2041	Timbale1 Paila H
F#3	2042	Timbale1 Paila L
G3	322	Bell
G#3	322	Bell
A3	3373	HH Closed 1St
A#3	3620	HH Open AnCR
B3	1541	BellAir
C4	1607	FX Chime
C#4	3463	HH Open Rock L
D4	1609	Lektronica
D#4	2081	Agogo Lo
E4	2109	Cowbell1
F4	2110	Cowbell2
F#4	1546	Hi-Lo
G4	1546	Hi-Lo
G#4	1944	Triangle Mute
A4	1943	Triangle Open
A#4	1607	FX Chime
B4	1954	Sleigh Bell1
C5	1957	Wind Chime
C#5	326	Small Bell
D5	326	Small Bell
D#5	325	Brass Bell
E5	329	Hibashi
F5	146	Brite Piano
F#5	3169	Sd LdwHMono
G5	146	Brite Piano
G#5	3170	Sd BreakRim
A5	336	Gamelan2
A#5	2219	Udu Finger
B5	327	Finger Cymbal
C6	322	Bell

PDR 53 Hands Kit

Note	Wave Number	Wave Name
C0	2143	Tabla Mute
C#0	3205	Sd Brush Soft St
D0	3217	Sd Brush Swir St
D#0	3208	Sd Brush Med St
E0	3220	Sd Brush SwirAtt St
F0	1855	AcousticGtr FX29 St
F#0	1934	Stick2
G0	2074	Pandeiro Thump
G#0	2143	Tabla Mute
A0	1908	Electric Bass FX 16
A#0	1819	AcousticGtr FX17 St
B0	2144	Tabla Combi
C1	2178	Wa Taiko
C#1	1998	Quinto1 Slap
D1	3208	Sd Brush Med St
D#1	1945	Hand Clap1 St
E1	2833	Sd Funk Ay St
F1	2221	Udu Low
F#1	2143	Tabla Mute
G1	2221	Udu Low
G#1	2141	Tabla Bya
A1	2220	Udu High
A#1	2142	Tabla Nah
B1	2220	Udu High
C2	2219	Udu Finger
C#2	3913	Ride2 R
D2	2219	Udu Finger
D#2	3935	Ride Cup1 St
E2	3953	Ride Cup Mono2
F2	3935	Ride Cup1 St
F#2	1929	Tambourine1 Hit
G2	3935	Ride Cup1 St
G#2	2109	Cowbell1
A2	3951	Ride Mono
A#2	1940	Vibraslap1
B2	3912	Ride2 L
C3	2007	Bongo1 Hi 1Fingr 1-2
C#3	2020	Bongo1 Lo 3Fingr 1-2
D3	1966	Conga1 Hi Tip
D#3	1972	Conga1 Hi Slap Open
E3	1970	Conga1 Hi Open 2
F3	2033	Timbale1 Hi 1-3
F#3	2037	Timbale1 Lo 1-2
G3	2080	Agogo Hi
G#3	2081	Agogo Lo
A3	2078	Tmbourim Finger
A#3	2078	Tmbourim Finger
B3	1946	Hand Clap1 L
C4	1946	Hand Clap1 L
C#4	2083	Guiro Long
D4	2083	Guiro Long
D#4	2219	Udu Finger
E4	2141	Tabla Bya
F4	1966	Conga1 Hi Tip
F#4	2220	Udu High
G4	2220	Udu High
G#4	2219	Udu Finger
A4	327	Finger Cymbal
A#4	2143	Tabla Mute
B4	1954	Sleigh Bell1
C5	1957	Wind Chime
C#5	1972	Conga1 Hi Slap Open
D5	2003	Tumba Tip
D#5	2003	Tumba Tip
E5	1900	Electric Bass FX 08
F5	2003	Tumba Tip
F#5	1893	Electric Bass FX 01
G5	2001	Tumba Open
G#5	1898	Electric Bass FX 06
A5	1780	AcousticGtr FX04 St
A#5	2221	Udu Low
B5	2134	Djembe1 Combi
C6	2002	Tumba Slap

PDR 54 Scratches

Note	Wave Number	Wave Name
C0	1748	Scratch H
C#0	1749	Scratch L
D0	1750	Scratch Down
D#0	1751	Scratch Hi F
E0	1752	Scratch Hi R
F0	1753	Scratch Lo F
F#0	1754	Scratch Lo R
G0	1755	Scratch Bd F
G#0	1756	Scratch Bd R
A0	1757	Scratch Sd F
A#0	1758	Scratch Sd R
B0	1759	Scratch Vo F
C1	1748	Scratch H
C#1	1749	Scratch L
D1	1750	Scratch Down
D#1	1751	Scratch Hi F
E1	1752	Scratch Hi R
F1	1753	Scratch Lo F
F#1	1754	Scratch Lo R
G1	1755	Scratch Bd F
G#1	1756	Scratch Bd R
A1	1757	Scratch Sd F
A#1	1758	Scratch Sd R
B1	1759	Scratch Vo F
C2	1760	Scratch Vo R
C#2	1761	Scratch Stop
D2	1762	Scratch Spin
D#2	1763	Scratch Hip
E2	1764	Scratch Hip2
F2	1767	Scratch Combi
F#2	1768	Scratch Combi2
G2	1769	Scratch Combi3
G#2	1770	Scratch Combi4
A2	1748	Scratch H
A#2	1749	Scratch L
B2	1750	Scratch Down
C3	1751	Scratch Hi F
C#3	1752	Scratch Hi R
D3	1753	Scratch Lo F
D#3	1754	Scratch Lo R
E3	1755	Scratch Bd F
F3	1756	Scratch Bd R
F#3	1757	Scratch Sd F
G3	1758	Scratch Sd R
G#3	1759	Scratch Vo F
A3	1760	Scratch Vo R
A#3	1761	Scratch Stop
B3	1762	Scratch Spin
C4	1763	Scratch Hip
C#4	1764	Scratch Hip2
D4	1767	Scratch Combi
D#4	1768	Scratch Combi2
E4	1769	Scratch Combi3
F4	1770	Scratch Combi4
F#4	1748	Scratch H
G4	1749	Scratch L
G#4	1750	Scratch Down
A4	1751	Scratch Hi F
A#4	1752	Scratch Hi R
B4	1753	Scratch Lo F
C5	1754	Scratch Lo R
C#5	1755	Scratch Bd F
D5	1756	Scratch Bd R
D#5	1757	Scratch Sd F
E5	1758	Scratch Sd R
F5	1759	Scratch Vo F
F#5	1760	Scratch Vo R
G5	1761	Scratch Stop
G#5	1762	Scratch Spin
A5	1763	Scratch Hip
A#5	1764	Scratch Hip2
B5	1767	Scratch Combi
C6	1768	Scratch Combi2

PDR 55 Acoustic Snares

Note	Wave Number	Wave Name
C0	2804	Sd Normal 1St
C#0	2805	Sd Normal 2St
D0	2806	Sd Normal 3St
D#0	2807	Sd Normal 4St
E0	2822	Sd Funk 1St
F0	2823	Sd Funk 2St
F#0	2824	Sd Funk 3St
G0	2833	Sd Funk Ay St
G#0	2840	Sd Basic 1St
A0	2841	Sd Basic 2St
A#0	2842	Sd Basic 3St
B0	2857	Sd SonA 1St
C1	2858	Sd SonA 2St
C#1	2859	Sd SonA 3St
D1	2860	Sd SonA 4St
D#1	2875	Sd Blues 1St
E1	2876	Sd Blues 2St
F1	2877	Sd Blues 3St
F#1	2890	Sd BluesHeart 1St
G1	2891	Sd BluesHeart 2St
G#1	2892	Sd BluesHeart 3St
A1	2907	Sd Tight 1St
A#1	2908	Sd Tight 2St
B1	2909	Sd Tight 3St
C2	2910	Sd Tight 4St
C#2	2922	Sd Hip 1St
D2	2923	Sd Hip 2St
D#2	2930	Sd Rock Open1 St
E2	2933	Sd Rock Mute1 St
F2	2936	Sd Rock Rim1 St
F#2	2939	Sd Rock Open2 St
G2	2942	Sd Rock Mute2 St
G#2	2945	Sd Rock Rim2 St
A2	2948	Sd Rock Flam St
A#2	2930	Sd Rock Open1 St
B2	2933	Sd Rock Mute1 St
C3	2936	Sd Rock Rim1 St
C#3	2939	Sd Rock Open2 St
D3	2942	Sd Rock Mute2 St
D#3	2945	Sd Rock Rim2 St
E3	2948	Sd Rock Flam St
F3	2806	Sd Normal 3St
F#3	2833	Sd Funk Ay St
G3	2842	Sd Basic 3St
G#3	2859	Sd SonA 3St
A3	2892	Sd BluesHeart 3St
A#3	2909	Sd Tight 3St
B3	2918	Sd Tight 3R
C4	2718	Sd Bld St1-4
C#4	2738	Sd Soul St1-4
D4	2758	Sd Strong St1-4
D#4	2778	Sd Rng St1-4
E4	2955	Sd Mid Rim
F4	2956	Sd Ambience
F#4	3167	Sd Gate1
G4	3169	Sd LdwHMono
G#4	3170	Sd BreakRim
A4	3171	Sd Dry
A#4	3172	Sd Heavy
B4	3173	Sd GM
C5	2978	Sd PowerB 1-5St
C#5	3002	Sd PowerC 1-5St
D5	3026	Sd PowerD 1-4St
D#5	3173	Sd GM
E5	3205	Sd Brush Soft St
F5	3208	Sd Brush Med St
F#5	3211	Sd Brush vari St
G5	3220	Sd Brush SwirAtt St
G#5	3224	Sd OrchA 1 St
A5	3232	Sd OrchB 1-2 St
A#5	3256	Sd Orch Roll St
B5	3225	Sd OrchA 2 St
C6	3208	Sd Brush Med St

PDR 56 GroupedStereo Snares

Note	Wave Number	Wave Name
C0	2798	Sd Normal St1-4
C#0	2799	Sd Normal St1-3
D0	2800	Sd Normal St2-4
D#0	2801	Sd Normal St1-2
E0	2802	Sd Normal St2-3
F0	2803	Sd Normal St3-4
F#0	2804	Sd Normal 1St
G0	2805	Sd Normal 2St
G#0	2806	Sd Normal 3St
A0	2807	Sd Normal 4St
A#0	2818	Sd Funk St1-3
B0	2819	Sd Funk St1-2
C1	2820	Sd Funk St2-3
C#1	2821	Sd Funk St1/3
D1	2822	Sd Funk 1St
D#1	2823	Sd Funk 2St
E1	2824	Sd Funk 3St
F1	2833	Sd Funk Ay St
F#1	2836	Sd Basic St1-3
G1	2837	Sd Basic St1-2
G#1	2838	Sd Basic St2-3
A1	2839	Sd Basic St1/3
A#1	2840	Sd Basic 1St
B1	2841	Sd Basic 2St
C2	2842	Sd Basic 3St
C#2	2851	Sd SonA St1-4
D2	2852	Sd SonA St1-3
D#2	2853	Sd SonA St2-4
E2	2854	Sd SonA St1-2
F2	2855	Sd SonA St2-3
F#2	2856	Sd SonA St3-4
G2	2857	Sd SonA 1St
G#2	2858	Sd SonA 2St
A2	2859	Sd SonA 3St
A#2	2860	Sd SonA 4St
B2	2871	Sd Blues St1-3
C3	2872	Sd Blues St1-2
C#3	2873	Sd Blues St2-3
D3	2874	Sd Blues St1/3
D#3	2875	Sd Blues 1St
E3	2876	Sd Blues 2St
F3	2877	Sd Blues 3St
F#3	2886	Sd BluesHeart St1-3
G3	2887	Sd BluesHeart St1-2
G#3	2888	Sd BluesHeart St2-3
A3	2889	Sd BluesHeart St1/3
A#3	2890	Sd BluesHeart 1St
B3	2891	Sd BluesHeart 2St
C4	2892	Sd BluesHeart 3St
C#4	2901	Sd Tight St1-4
D4	2902	Sd Tight St1-3
D#4	2903	Sd Tight St2-4
E4	2904	Sd Tight St1-2
F4	2905	Sd Tight St2-3
F#4	2906	Sd Tight St3-4
G4	2907	Sd Tight 1St
G#4	2908	Sd Tight 2St
A4	2909	Sd Tight 3St
A#4	2910	Sd Tight 4St
B4	2963	Sd PowerA 1St
C5	2966	Sd PowerA 2St
C#5	2969	Sd PowerA 3St
D5	2972	Sd PowerA 4St
D#5	2975	Sd PowerA 5St
E5	2984	Sd PowerB 1St
F5	2987	Sd PowerB 2St
F#5	2990	Sd PowerB 3St
G5	2993	Sd PowerB 4St
G#5	2996	Sd PowerB 5St
A5	3002	Sd PowerC 1-5St
A#5	3026	Sd PowerD 1-4St
B5	2871	Sd Blues St1-3
C6	2886	Sd BluesHeart St1-3

PDR 57 All Kicks

Note	Wave Number	Wave Name
C0	2487	Bd Normal St1-2
C#0	2460	Bd Snap 1-2
D0	2470	Bd Tight 1
D#0	2490	Bd Normal L1-2
E0	2496	Bd Funk St1-2
F0	2478	Bd Ambience 1-2
F#0	2498	Bd Funk 2St
G0	2505	Bd High St
G#0	2508	Bd Low St
A0	2511	Bd H Son St
A#0	2514	Bd L Son St
B0	2517	Bd Funk Son St
C1	2520	Bd Rock1 St
C#1	2523	Bd Rock2 St
D1	2526	Bd Dry1
D#1	2527	Bd Dry2
E1	2528	Bd Pop
F1	2529	Bd Var1
F#1	2530	Bd Var2
G1	2531	Bd Room1
G#1	2532	Bd Room2
A1	2533	Bd Room3
A#1	2642	Bd Gate
B1	2643	Bd FX Gate
C2	2546	Bd PowerA 1-2St
C#2	2555	Bd PowerB 1-2St
D2	2543	Bd FK Jazz St
D#2	2647	Bd T9-4
E2	2648	Bd T9 Hd1
F2	2649	Bd T9 Hd2
F#2	2650	Bd T9 Hd3
G2	2651	Bd T8-1
G#2	2652	Bd T8-2
A2	2653	Bd T8-3
A#2	2654	Bd AnSm
B2	2655	Bd AnCR
C3	2657	Bd Human1
C#3	2658	Bd Human2
D3	2659	Bd Blip
D#3	2660	Bd BlpHd
E3	2661	Bd Jungle1
F3	2662	Bd Jungle2
F#3	2663	Bd Jungle3
G3	2664	Bd D&B1
G#3	2665	Bd D&B2
A3	2666	Bd R&B1
A#3	2667	Bd R&B2
B3	2668	Bd Hip Deep
C4	2669	Bd Break Deep
C#4	2670	Bd Break1
D4	2671	Bd Break2
D#4	2672	Bd Break Heavy
E4	2673	Bd Break Hard
F4	2674	Bd Distortion1
F#4	2675	Bd Distortion2
G4	2676	Bd Distortion3
G#4	2677	Bd Distortion4
A4	2678	Bd Distortion5
A#4	2679	Bd Distortion RM
B4	2680	Bd +HH
C5	2681	Bd FxHammer
C#5	2682	Bd ZapHard
D5	2683	Bd ZapMid
D#5	2684	Bd Sustain
E5	2685	Bd TekPower
F5	2686	Bd Hard Long
F#5	2687	Bd Analog Tight
G5	2688	Bd AnaHard
G#5	2689	Bd Lo-Fi
A5	2690	Bd ThickSkin
A#5	2691	Bd Slimy
B5	2712	Bd HipHop8
C6	2714	Bd HipHop10

PDR 58 Dance Kicks

Note	Wave Number	Wave Name
C0	2644	Bd T9-1
C#0	2644	Bd T9-1
D0	2645	Bd T9-2
D#0	2646	Bd T9-3
E0	2646	Bd T9-3
F0	2647	Bd T9-4
F#0	2648	Bd T9 Hd1
G0	2649	Bd T9 Hd2
G#0	2650	Bd T9 Hd3
A0	2650	Bd T9 Hd3
A#0	2686	Bd Hard Long
B0	2655	Bd AnCR
C1	2644	Bd T9-1
C#1	2645	Bd T9-2
D1	2646	Bd T9-3
D#1	2647	Bd T9-4
E1	2648	Bd T9 Hd1
F1	2649	Bd T9 Hd2
F#1	2650	Bd T9 Hd3
G1	2651	Bd T8-1
G#1	2652	Bd T8-2
A1	2653	Bd T8-3
A#1	2692	Bd Elec1
B1	2655	Bd AnCR
C2	2657	Bd Human1
C#2	2692	Bd Elec1
D2	2659	Bd Blip
D#2	2660	Bd BlpHd
E2	2694	Bd Elec3
F2	2699	Bd ElecFX1
F#2	2700	Bd ElecFX2
G2	2701	Bd ElecGate
G#2	2702	Bd ElecClick
A2	2703	Bd ElecPower1
A#2	2667	Bd R&B2
B2	2668	Bd Hip Deep
C3	2669	Bd Break Deep
C#3	2670	Bd Break1
D3	2704	Bd ElecPower2
D#3	2672	Bd Break Heavy
E3	2673	Bd Break Hard
F3	2674	Bd Distortion1
F#3	2675	Bd Distortion2
G3	2676	Bd Distortion3
G#3	2677	Bd Distortion4
A3	2678	Bd Distortion5
A#3	2693	Bd Elec2
B3	2696	Bd ElecComp1
C4	2681	Bd FxHammer
C#4	2682	Bd ZapHard
D4	2683	Bd ZapMid
D#4	2684	Bd Sustain
E4	2685	Bd TekPower
F4	2686	Bd Hard Long
F#4	2687	Bd Analog Tight
G4	2688	Bd AnaHard
G#4	2697	Bd ElecComp2
A4	2698	Bd ElecComp3
A#4	2691	Bd Slimy
B4	2642	Bd Gate
C5	2643	Bd FX Gate
C#5	2705	Bd HipHop1
D5	2706	Bd HipHop2
D#5	2707	Bd HipHop3
E5	2708	Bd HipHop4
F5	2709	Bd HipHop5
F#5	2710	Bd HipHop6
G5	2711	Bd HipHop7
G#5	2712	Bd HipHop8
A5	2713	Bd HipHop9
A#5	2714	Bd HipHop10
B5	2686	Bd Hard Long
C6	2687	Bd Analog Tight

PDR 59 Arabic Mixed Kit

Note	Wave Number	Wave Name
C0	1957	Wind Chime
C#0	3205	Sd Brush Soft St
D0	3217	Sd Brush Swir St
D#0	3208	Sd Brush Med St
E0	3220	Sd Brush SwirAtt St
F0	3201	Sd LiveRoll St
F#0	1935	Castanet1
G0	2804	Sd Normal 1St
G#0	1933	Stick1
A0	2645	Bd T9-2
A#0	2836	Sd Basic St1-3
B0	2505	Bd High St
C1	2487	Bd Normal St1-2
C#1	2818	Sd Funk St1-3
D1	2718	Sd Bld St1-4
D#1	1945	Hand Clap1 St
E1	2738	Sd Soul St1-4
F1	3663	Tom Rock Low St
F#1	3372	HH Closed 1-4St
G1	3659	Tom Rock Mid St
G#1	3392	HH Pedal 1-3St
A1	3651	Tom Floor St
A#1	3408	HH Open 1-2St
B1	3647	Tom Low St
C2	3643	Tom Mid St
C#2	3867	Crash2 St
D2	3639	Tom Hi St
D#2	3408	HH Open 1-2St
E2	3977	Reverse Cymbal
F2	2037	Timbale1 Lo 1-2
F#2	1970	Conga1 Hi Open 2
G2	2033	Timbale1 Hi 1-3
G#2	1972	Conga1 Hi Slap Open
A2	1927	Tambourine1 Sw
A#2	2001	Tumba Open
B2	2109	Cowbell1
C3	2106	Claves1
C#3	2007	Bongo1 Hi 1Fingr 1-2
D3	1939	Wood Block
D#3	2020	Bongo1 Lo 3Fingr 1-2
E3	1939	Wood Block
F3	2145	Dohol Low
F#3	2059	CabasaA 1-2
G3	2146	Dohol High
G#3	1917	ShakerA 1
A3	1935	Castanet1
A#3	2056	Maracas Sw
B3	1935	Castanet1
C4	2230	Twaisat3
C#4	2228	Twaisat1
D4	2229	Twaisat2
D#4	2231	Twaisat4
E4	2231	Twaisat4
F4	2204	Small Tabla Dom
F#4	2223	Barasim Dom
G4	2205	Small Tabla Snap
G#4	2224	Barasim Sak
A4	2206	Small Tabla Sak
A#4	2225	Barasim Tak
B4	2207	Small Tabla Tak
C5	2208	Big Tabla Dom
C#5	2226	Segal Dom
D5	2209	Big Tabla Tak
D#5	2227	Segal Tak
E5	2210	Big Tabla Sak
F5	2211	Tabla Dom
F#5	2212	Tabla Tak1
G5	2218	Tabla Tremolo
G#5	2213	Tabla Tak2
A5	2214	Tabla Tik1
A#5	2217	Tabla Sak1
B5	2216	Tabla Tik3
C6	2215	Tabla Tik2

PDR 60 Belly Dance Kit

Note	Wave Number	Wave Name
C0	2215	Tabla Tik2
C#0	2178	Wa Taiko
D0	2131	Djembe1 Edge
D#0	2132	Djembe1 Mute
E0	2133	Djembe1 Open
F0	2134	Djembe1 Combi
F#0	2141	Tabla Bya
G0	2142	Tabla Nah
G#0	2143	Tabla Mute
A0	2144	Tabla Combi
A#0	2204	Small Tabla Dom
B0	2204	Small Tabla Dom
C1	2686	Bd Hard Long
C#1	2644	Bd T9-1
D1	3287	Sd T9-2
D#1	2425	Electric Clap1
E1	2768	Sd Strong L1-4
F1	3861	Tom Dist Lo
F#1	3610	HH Closed T9
G1	3860	Tom Dist Hi
G#1	3612	HH Closed T8-1
A1	3857	Tom Syn1
A#1	3611	HH Open T9
B1	3858	Tom Syn2
C2	3318	Sd Hip1
C#2	3872	Crash4
D2	3314	Sd D&B4
D#2	3621	HH Closed Break
E2	3977	Reverse Cymbal
F2	2037	Timbale1 Lo 1-2
F#2	1970	Conga1 Hi Open 2
G2	2033	Timbale1 Hi 1-3
G#2	1972	Conga1 Hi Slap Open
A2	1927	Tambourine1 Sw
A#2	2001	Tumba Open
B2	2109	Cowbell1
C3	2106	Claves1
C#3	2007	Bongo1 Hi 1Fingr 1-2
D3	1939	Wood Block
D#3	2020	Bongo1 Lo 3Fingr 1-2
E3	1939	Wood Block
F3	2145	Dohol Low
F#3	2059	CabasaA 1-2
G3	2146	Dohol High
G#3	1917	ShakerA 1
A3	1935	Castanet1
A#3	2056	Maracas Sw
B3	1935	Castanet1
C4	2230	Twaisat3
C#4	2228	Twaisat1
D4	2229	Twaisat2
D#4	2231	Twaisat4
E4	2231	Twaisat4
F4	2204	Small Tabla Dom
F#4	2223	Barasim Dom
G4	2205	Small Tabla Snap
G#4	2224	Barasim Sak
A4	2206	Small Tabla Sak
A#4	2225	Barasim Tak
B4	2207	Small Tabla Tak
C5	2208	Big Tabla Dom
C#5	2226	Segal Dom
D5	2209	Big Tabla Tak
D#5	2227	Segal Tak
E5	2210	Big Tabla Sak
F5	2211	Tabla Dom
F#5	2212	Tabla Tak1
G5	2218	Tabla Tremolo
G#5	2213	Tabla Tak2
A5	2214	Tabla Tik1
A#5	2217	Tabla Sak1
B5	2216	Tabla Tik3
C6	2215	Tabla Tik2

PDR 61 Dance Snares

Note	Wave Number	Wave Name
C0	3332	Sd FX1
C#0	3333	Sd FX2
D0	3334	Sd FX3
D#0	3335	Sd FX4
E0	3337	Sd Dist
F0	3338	Sd Cut
F#0	3339	Sd Garg H
G0	3340	Sd Garg L
G#0	3341	Sd FM
A0	3343	Sd Syn
A#0	3347	Sd Hammer
B0	3348	Sd Lo-Fi
C1	3286	Sd T9-1
C#1	3287	Sd T9-2
D1	3288	Sd T9-3
D#1	3289	Sd T9-4
E1	3290	Sd T9-5
F1	3291	Sd T9Gate
F#1	3293	Sd T8-1
G1	3294	Sd T8-2
G#1	3295	Sd T8-3
A1	3296	Sd T8-4
A#1	3297	Sd T8-5
B1	3301	Sd AnSm
C2	3303	Sd AnCR
C#2	3305	Sd Human1
D2	3307	Sd Jungle1
D#2	3308	Sd Jungle2
E2	3309	Sd Jungle3
F2	3310	Sd JungleFX
F#2	3311	Sd D&B1
G2	3312	Sd D&B2
G#2	3313	Sd D&B3
A2	3314	Sd D&B4
A#2	3315	Sd R&B1
B2	3316	Sd R&B1 Rim
C3	3317	Sd R&B2
C#3	3318	Sd Hip1
D3	3319	Sd Hip2
D#3	3320	Sd Hip3
E3	3321	Sd Hip Gate
F3	3322	Sd Hip Rim1
F#3	3323	Sd Hip Rim2
G3	3324	Sd Hip Rim3
G#3	3325	Sd Hip Rim4
A3	3326	Sd Hip Rim5
A#3	3328	Sd Break2
B3	3330	Sd Break Heavy
C4	3274	Sd Elec1
C#4	3275	Sd Elec2
D4	3276	Sd Elec3
D#4	3277	Sd Elec4
E4	3278	Sd Elec5
F4	3279	Sd Elec6
F#4	3280	Sd Elec7
G4	3281	Sd Elec8
G#4	3282	Sd Elec9
A4	3283	Sd Elec10
A#4	3284	Sd Elec11
B4	3285	Sd Elec12
C5	3274	Sd Elec1
C#5	3294	Sd T8-2
D5	3276	Sd Elec3
D#5	3277	Sd Elec4
E5	3278	Sd Elec5
F5	3279	Sd Elec6
F#5	3280	Sd Elec7
G5	3274	Sd Elec1
G#5	3281	Sd Elec8
A5	3283	Sd Elec10
A#5	3284	Sd Elec11
B5	3285	Sd Elec12
C6	3288	Sd T9-3

PDR 62 Special SFXs

Note	Wave Number	Wave Name
C0	1519	Mini Blip2
C#0	1518	Mini Blip1
D0	1520	Mini Blip3
D#0	1521	Mini Blip4
E0	1522	Mini Blip5
F0	1523	Mini Blip6
F#0	1705	Bell FX1
G0	1706	Bell FX2
G#0	1714	Electric Perc4
A0	1716	Electric Perc6
A#0	1725	Electric Perc15
B0	1715	Electric Perc5
C1	1712	Electric Perc2
C#1	1713	Electric Perc3
D1	1717	Electric Perc7
D#1	1718	Electric Perc8
E1	1719	Electric Perc9
F1	1720	Electric Perc10
F#1	1724	Electric Perc14
G1	1723	Electric Perc13
G#1	1619	Neo Seq Em-3
A1	1448	Spectrum1
A#1	1450	Spectrum3
B1	1449	Spectrum2
C2	1625	Whisper Seq Bb
C#2	1694	Digi Voice Mod
D2	1560	Moving Chime St
D#2	1557	Engine Room St
E2	1661	Raspberry
F2	1662	DigiHeli
F#2	1614	Hop FX1
G2	1529	Willow St
G#2	1532	Anemone St
A2	1535	Magnitude St
A#2	1659	Radio Noise
B2	1613	Quiek
C3	1600	Stab Giant
C#3	1596	HH Hit
D3	1601	Stab Hard
D#3	1602	Stab Organ2
E3	1603	Stab Aah
F3	1604	Hit Uhh
F#3	1605	Hit Orchestra2
G3	1597	Hit Orchestra1
G#3	1598	Hit Brass
A3	1588	Orchestra Hit1 St
A#3	1591	Orchestra Hit2 St
B3	1006	Brass Sect Fall
C4	567	Play FX Mix
C#4	567	Play FX Mix
D4	1883	ElectricGtr FX23
D#4	1887	Acoustic Bass FX04
E4	1888	Acoustic Bass FX05
F4	1884	Acoustic Bass FX01
F#4	1748	Scratch H
G4	1749	Scratch L
G#4	1750	Scratch Down
A4	1751	Scratch Hi F
A#4	1761	Scratch Stop
B4	1730	Tape Rewind
C5	1703	Ripper
C#5	1708	Noise Burst
D5	1709	Zap1
D#5	1710	Zap2
E5	1726	Hi Q1
F5	1727	Hi Q2
F#5	1729	Bomb
G5	1731	FxGun1
G#5	1563	Motion Beam
A5	1526	Birch St
A#5	1387	Tri Wave
B5	1501	FM Bass2
C6	1394	FM Metal2

PDR 63 Synthetic Kit

Note	Wave Number	Wave Name
C0	2693	Bd Elec2
C#0	1761	Scratch Stop
D0	3218	Sd Brush Swir L
D#0	3210	Sd Brush Med R
E0	3217	Sd Brush Swir St
F0	3204	Sd Roll Mono
F#0	1505	FM Bass6
G0	1740	Seashore
G#0	1714	Electric Perc4
A0	2698	Bd ElecComp3
A#0	2775	Sd Strong R2
B0	2693	Bd Elec2
C1	2691	Bd Slimy
C#1	2041	Timbale1 Paila H
D1	2951	Sd Piccolo
D#1	2424	Clap AnSm
E1	3283	Sd Elec10
F1	1480	Mg Bass2
F#1	1727	Hi Q2
G1	1480	Mg Bass2
G#1	1717	Electric Perc7
A1	3856	Tom T8
A#1	3615	HH Open T8-2
B1	3856	Tom T8
C2	3856	Tom T8
C#2	3871	Crash3
D2	3856	Tom T8
D#2	3952	Ride Cup Mono
E2	3952	Ride Cup Mono
F2	3952	Ride Cup Mono
F#2	1757	Scratch Sd F
G2	3938	Ride Cup1 RL
G#2	1717	Electric Perc7
A2	3871	Crash3
A#2	1546	Hi-Lo
B2	3958	China2
C3	1390	Ring Mod
C#3	1718	Electric Perc8
D3	1390	Ring Mod
D#3	1717	Electric Perc7
E3	1721	Electric Perc11
F3	2052	Paila H
F#3	2052	Paila H
G3	1614	Hop FX1
G#3	1615	Hop FX2
A3	1748	Scratch H
A#3	1751	Scratch Hi F
B3	1710	Zap2
C4	1660	LFO Seq
C#4	1660	LFO Seq
D4	1458	Mini Bass3a
D#4	1613	Quiek
E4	1556	Digi Breath
F4	1662	DigiHeli
F#4	1717	Electric Perc7
G4	1395	FM Organ1
G#4	2150	Tibetan Bowl
A4	2150	Tibetan Bowl
A#4	2226	Segal Dom
B4	1559	Engine Room R
C5	1718	Electric Perc8
C#5	484	Steel Slide St
D5	1519	Mini Blip2
D#5	1449	Spectrum2
E5	1522	Mini Blip5
F5	1524	Noise
F#5	2664	Bd D&B1
G5	1449	Spectrum2
G#5	1538	SabreTone
A5	1724	Electric Perc14
A#5	1718	Electric Perc8
B5	1662	DigiHeli
C6	1957	Wind Chime

PDR 64 SFX Kit

Note	Wave Number	Wave Name
C0	1319	Fat Saw Mn
C#0	1765	Scratch Attack
D0	1449	Spectrum2
D#0	1452	3o3 Saw2
E0	1735	TurnTable
F0	3204	Sd Roll Mono
F#0	1505	FM Bass6
G0	1730	Tape Rewind
G#0	1715	Electric Perc5
A0	2697	Bd ElecComp2
A#0	2798	Sd Normal St1-4
B0	2691	Bd Slimy
C1	2693	Bd Elec2
C#1	1458	Mini Bass3a
D1	2886	Sd BluesHeart St1-3
D#1	1453	3o3 Square
E1	2867	Sd SonA 3L
F1	3860	Tom Dist Hi
F#1	1662	DigiHeli
G1	3860	Tom Dist Hi
G#1	1712	Electric Perc2
A1	3860	Tom Dist Hi
A#1	3615	HH Open T8-2
B1	3860	Tom Dist Hi
C2	3860	Tom Dist Hi
C#2	3871	Crash3
D2	3860	Tom Dist Hi
D#2	3937	Ride Cup1 R
E2	3914	Ride2 RL
F2	3953	Ride Cup Mono2
F#2	1751	Scratch Hi F
G2	3964	Splash1 L
G#2	1454	Mini Bass1
A2	3863	Crash1 St
A#2	1557	Engine Room St
B2	3938	Ride Cup1 RL
C3	1365	Sync LFO
C#3	1366	P5 SawDown 0 dg
D3	1325	OB Strings
D#3	2799	Sd Normal St1-3
E3	1721	Electric Perc11
F3	1333	PWM Slow
F#3	1660	LFO Seq
G3	1542	BigSyn
G#3	1542	BigSyn
A3	1605	Hit Orchestra2
A#3	2204	Small Tabla Dom
B3	1406	Digi 03
C4	1406	Digi 03
C#4	1404	Digi 01
D4	1404	Digi 01
D#4	1554	Sonar1
E4	1601	Stab Hard
F4	1557	Engine Room St
F#4	1666	Chatter
G4	1672	Hoo
G#4	2148	Mondira
A4	2148	Mondira
A#4	394	Rotor
B4	1661	Raspberry
C5	1662	DigiHeli
C#5	1453	3o3 Square
D5	1615	Hop FX2
D#5	1443	DigiBell3
E5	1728	Vox Hit Rev
F5	1726	Hi Q1
F#5	1730	Tape Rewind
G5	1732	FxGun2
G#5	1731	FxGun1
A5	1733	Thunder
A#5	1736	Police
B5	1729	Bomb
C6	1729	Bomb

GMDR 1 Stereo GM Kit

Note	Wave Number	Wave Name
C0	2106	Claves1
C#0	3205	Sd Brush Soft St
D0	3217	Sd Brush Swir St
D#0	3208	Sd Brush Med St
E0	3220	Sd Brush SwirAtt St
F0	3201	Sd LiveRoll St
F#0	1935	Castanet1
G0	2804	Sd Normal 1St
G#0	1933	Stick1
A0	2496	Bd Funk St1-2
A#0	2838	Sd Basic St2-3
B0	2505	Bd High St
C1	2487	Bd Normal St1-2
C#1	3190	Sd Closed Rim St
D1	2798	Sd Normal St1-4
D#1	2423	Clap T9
E1	2837	Sd Basic St1-2
F1	3651	Tom Floor St
F#1	3372	HH Closed 1-4St
G1	3647	Tom Low St
G#1	3395	HH Pedal 3 St
A1	3647	Tom Low St
A#1	3410	HH Open 2St
B1	3643	Tom Mid St
C2	3643	Tom Mid St
C#2	3867	Crash2 St
D2	3639	Tom Hi St
D#2	3907	Ride1 St
E2	3954	China1 St
F2	3935	Ride Cup1 St
F#2	1927	Tambourine1 Sw
G2	3963	Splash1 St
G#2	2110	Cowbell2
A2	3870	Crash2 RL
A#2	1940	Vibraslap1
B2	3910	Ride1 RL
C3	2007	Bongo1 Hi 1Fingr 1-2
C#3	2020	Bongo1 Lo 3Fingr 1-2
D3	1966	Conga1 Hi Tip
D#3	1970	Conga1 Hi Open 2
E3	2001	Tumba Open
F3	2033	Timbale1 Hi 1-3
F#3	2037	Timbale1 Lo 1-2
G3	2080	Agogo Hi
G#3	2081	Agogo Lo
A3	2059	CabasaA 1-2
A#3	2057	Maracas Slur
B3	2108	Whistle
C4	2108	Whistle
C#4	2084	Guiro Short
D4	2083	Guiro Long
D#4	2106	Claves1
E4	1939	Wood Block
F4	1939	Wood Block
F#4	2006	Cuica Hi
G4	2005	Cuica Lo
G#4	1944	Triangle Mute
A4	1943	Triangle Open
A#4	1917	ShakerA 1
B4	1954	Sleigh Bell1
C5	1957	Wind Chime
C#5	2878	Sd Blues L1-3
D5	2901	Sd Tight St1-4
D#5	2894	Sd BluesHeart R1-3
E5	2921	Sd Hip St1-2
F5	2508	Bd Low St
F#5	3169	Sd LdwHMono
G5	2666	Bd R&B1
G#5	3172	Sd Heavy
A5	2531	Bd Room1
A#5	2956	Sd Ambience
B5	2517	Bd Funk Son St
C6	2532	Bd Room2

UDR 1 Maple Custom Kit

Note	Wave Number	Wave Name
C0	2110	Cowbell2
C#0	3205	Sd Brush Soft St
D0	3217	Sd Brush Swir St
D#0	3208	Sd Brush Med St
E0	3220	Sd Brush SwirAtt St
F0	3134	Sd Metal SnRoll St
F#0	1935	Castanet1
G0	3074	Sd Beech 1-4 St
G#0	1934	Stick2
A0	2582	Bd Oak Open 1-2 St
A#0	3092	Sd Beech OpRm 1-2 St
B0	2564	Bd Maple Close 1-2St
C1	2573	Bd Maple Open 1-2 St
C#1	3131	Sd Metal ClRm St
D1	3104	Sd Metal 1-4 St
D#1	1945	Hand Clap1 St
E1	3122	Sd Metal OpRm 1-2 St
F1	3739	Tom Maple Flr 1-2 St
F#1	3519	HH Dark Closed 1-4St
G1	3739	Tom Maple Flr 1-2 St
G#1	3539	HH Dark Pedal 1-2 St
A1	3727	Tom Maple Mid 1-2 St
A#1	3551	HH Dark Open 1-2 St
B1	3715	Tom Maple Hi 1-2 St
C2	3715	Tom Maple Hi 1-2 St
C#2	3873	Crash Brite St
D2	3715	Tom Maple Hi 1-2 St
D#2	3915	Ride Brite St
E2	3959	China3 St
F2	3919	Ride Brite Cup St
F#2	1930	Tambourine2 Sw
G2	3967	Splash2 St
G#2	2111	Cowbell3 Sw
A2	3877	Crash Dark St
A#2	1941	Vibraslap2
B2	3923	Ride Warm St
C3	2028	Bongo2 Hi Open 2
C#3	2032	Bongo2 Lo Open 2
D3	1988	Conga2 Hi Slap 2
D#3	1991	Conga2 Hi Open 2
E3	1994	Conga2 Lo Open 1
F3	2033	Timbale1 Hi 1-3
F#3	2037	Timbale1 Lo 1-2
G3	2080	Agogo Hi
G#3	2081	Agogo Lo
A3	2062	CabasaB 1-4
A#3	2057	Maracas Slur
B3	2108	Whistle
C4	2108	Whistle
C#4	2086	MetalGuiro Short 1-2
D4	2089	MetalGuiro Long
D#4	2107	Claves2
E4	1958	Resin Block Small
F4	1959	Resin Block Large
F#4	2006	Cuica Hi
G4	2005	Cuica Lo
G#4	1944	Triangle Mute
A4	1943	Triangle Open
A#4	1920	ShakerB Sw
B4	1955	Sleigh Bell2
C5	1956	Ghunghuru
C#5	2093	Surdo2 Mute
D5	2092	Surdo2 Open
D#5	1985	Conga2 Hi Tip
E5	1984	Conga2 Hi Heel
F5	1986	Conga2 Hi Slap 1-2
F#5	1992	Conga2 Hi Mute
G5	1989	Conga2 Hi Open 1-2
G#5	1996	Conga2 Lo Slide
A5	1993	Conga2 Lo Open 1-2
A#5	2137	Djembe2 Mute
B5	2135	Djembe2 Lo
C6	2136	Djembe2 Slap

UDR 2 Oak Custom Kit

Note	Wave Number	Wave Name
C0	2110	Cowbell2
C#0	3205	Sd Brush Soft St
D0	3217	Sd Brush Swir St
D#0	3208	Sd Brush Med St
E0	3220	Sd Brush SwirAtt St
F0	3134	Sd Metal SnRoll St
F#0	1935	Castanet1
G0	3104	Sd Metal 1-4 St
G#0	1934	Stick2
A0	2582	Bd Oak Open 1-2 St
A#0	3122	Sd Metal OpRm 1-2 St
B0	2591	Bd Oak Close 1-2 St
C1	2582	Bd Oak Open 1-2 St
C#1	3071	Sd Oak ClRm St
D1	3044	Sd Oak 1-4 St
D#1	1945	Hand Clap1 St
E1	3062	Sd Oak OpRm 1-2 St
F1	3775	Tom Oak Floor 1-2 St
F#1	3519	HH Dark Closed 1-4St
G1	3775	Tom Oak Floor 1-2 St
G#1	3539	HH Dark Pedal 1-2 St
A1	3763	Tom Oak Mid 1-2 St
A#1	3551	HH Dark Open 1-2 St
B1	3763	Tom Oak Mid 1-2 St
C2	3751	Tom Oak Hi 1-2 St
C#2	3873	Crash Brite St
D2	3751	Tom Oak Hi 1-2 St
D#2	3915	Ride Brite St
E2	3959	China3 St
F2	3919	Ride Brite Cup St
F#2	1930	Tambourine2 Sw
G2	3967	Splash2 St
G#2	2111	Cowbell3 Sw
A2	3877	Crash Dark St
A#2	1941	Vibraslap2
B2	3923	Ride Warm St
C3	2028	Bongo2 Hi Open 2
C#3	2032	Bongo2 Lo Open 2
D3	1988	Conga2 Hi Slap 2
D#3	1991	Conga2 Hi Open 2
E3	1994	Conga2 Lo Open 1
F3	2045	Timbale2 Hi 2
F#3	2049	Timbale2 Lo 2
G3	2080	Agogo Hi
G#3	2081	Agogo Lo
A3	2062	CabasaB 1-4
A#3	2057	Maracas Slur
B3	2108	Whistle
C4	2108	Whistle
C#4	2086	MetalGuiro Short 1-2
D4	2089	MetalGuiro Long
D#4	2107	Claves2
E4	1958	Resin Block Small
F4	1959	Resin Block Large
F#4	2006	Cuica Hi
G4	2005	Cuica Lo
G#4	1944	Triangle Mute
A4	1943	Triangle Open
A#4	1920	ShakerB Sw
B4	1955	Sleigh Bell2
C5	1957	Wind Chime
C#5	2093	Surdo2 Mute
D5	2092	Surdo2 Open
D#5	1985	Conga2 Hi Tip
E5	1984	Conga2 Hi Heel
F5	1986	Conga2 Hi Slap 1-2
F#5	1992	Conga2 Hi Mute
G5	1989	Conga2 Hi Open 1-2
G#5	1996	Conga2 Lo Slide
A5	1993	Conga2 Lo Open 1-2
A#5	2137	Djembe2 Mute
B5	2135	Djembe2 Lo
C6	2136	Djembe2 Slap

UDR 3 Nu Jazzy Kit

Note	Wave Number	Wave Name
C0	2110	Cowbell2
C#0	3205	Sd Brush Soft St
D0	3217	Sd Brush Swir St
D#0	3208	Sd Brush Med St
E0	3220	Sd Brush SwirAtt St
F0	3134	Sd Metal SnRoll St
F#0	1951	Finger Snap
G0	3104	Sd Metal 1-4 St
G#0	1934	Stick2
A0	2582	Bd Oak Open 1-2 St
A#0	3122	Sd Metal OpRm 1-2 St
B0	2600	Bd NJz Closed 1-2 St
C1	2609	Bd NJz Open 1-2 St
C#1	3164	Sd NJz ClRm St
D1	3137	Sd NJz 1-4 St
D#1	1948	Hand Clap2 Sw
E1	3155	Sd NJz OpRm 1-2 St
F1	3811	Tom NJz Floor 1-2 St
F#1	3563	HH NJz Closed 1-4 St
G1	3811	Tom NJz Floor 1-2 St
G#1	3583	HH NJz Pedal 1-2 St
A1	3799	Tom NJz Low 1-2 St
A#1	3595	HH NJz Open 1-2 St
B1	3799	Tom NJz Low 1-2 St
C2	3787	Tom NJz Mid 1-2 St
C#2	3885	Crash NJzB St
D2	3787	Tom NJz Mid 1-2 St
D#2	3927	Ride NJz St
E2	3959	China3 St
F2	3931	Ride NJz Cup St
F#2	1930	Tambourine2 Sw
G2	3967	Splash2 St
G#2	2111	Cowbell3 Sw
A2	3881	Crash NJzA St
A#2	1941	Vibraslap2
B2	3923	Ride Warm St
C3	2028	Bongo2 Hi Open 2
C#3	2032	Bongo2 Lo Open 2
D3	1988	Conga2 Hi Slap 2
D#3	1991	Conga2 Hi Open 2
E3	1994	Conga2 Lo Open 1
F3	2033	Timbale1 Hi 1-3
F#3	2037	Timbale1 Lo 1-2
G3	2080	Agogo Hi
G#3	2081	Agogo Lo
A3	2062	CabasaB 1-4
A#3	2057	Maracas Slur
B3	2108	Whistle
C4	2108	Whistle
C#4	2086	MetalGuiro Short 1-2
D4	2089	MetalGuiro Long
D#4	2107	Claves2
E4	1958	Resin Block Small
F4	1959	Resin Block Large
F#4	2006	Cuica Hi
G4	2005	Cuica Lo
G#4	1944	Triangle Mute
A4	1943	Triangle Open
A#4	1920	ShakerB Sw
B4	1954	Sleigh Bell1
C5	1957	Wind Chime
C#5	2093	Surdo2 Mute
D5	2092	Surdo2 Open
D#5	1985	Conga2 Hi Tip
E5	1984	Conga2 Hi Heel
F5	1986	Conga2 Hi Slap 1-2
F#5	1992	Conga2 Hi Mute
G5	1989	Conga2 Hi Open 1-2
G#5	1996	Conga2 Lo Slide
A5	1993	Conga2 Lo Open 1-2
A#5	2137	Djembe2 Mute
B5	2135	Djembe2 Lo
C6	2136	Djembe2 Slap

UDR 4 Illest Hip Hop Kit

Note	Wave Number	Wave Name
C0	2706	Bd HipHop2
C#0	3363	Sd HipHop16
D0	3356	Sd HipHop9
D#0	2450	HipHop Clap9
E0	2715	Bd HipHop11
F0	2451	HipHop Clap10
F#0	3362	Sd HipHop15
G0	3353	Sd HipHop5
G#0	3361	Sd HipHop14
A0	2712	Bd HipHop8
A#0	3371	Sd HipHop Rim6
B0	2717	Bd HipHop13
C1	2716	Bd HipHop12
C#1	3369	Sd HipHop Rim4
D1	3360	Sd HipHop13
D#1	2454	HipHop Clap13
E1	3351	Sd HipHop2
F1	3842	Tom Dry Lo
F#1	3505	HH Power ClEgde 3R
G1	3842	Tom Dry Lo
G#1	3509	HH Power ClEgde 4R
A1	3841	Tom Dry Hi
A#1	3517	HH Power Open EdgeR
B1	3841	Tom Dry Hi
C2	3841	Tom Dry Hi
C#2	3872	Crash4
D2	3841	Tom Dry Hi
D#2	3912	Ride2 L
E2	3868	Crash2 L
F2	3951	Ride Mono
F#2	1929	Tambourine1 Hit
G2	3902	Hand Cymbal Open L
G#2	2117	Mambo Bell Body
A2	3956	China1 R
A#2	1952	Handbell L
B2	3953	Ride Cup Mono2
C3	1972	Conga1 Hi Slap Open
C#3	1980	Conga1 Lo Open 1
D3	1977	Conga1 Lo Tip
D#3	1983	Conga1 Lo Slap Open
E3	1981	Conga1 Lo Open 2
F3	2708	Bd HipHop4
F#3	2444	HipHop Clap3
G3	3627	HH Closed Tek
G#3	3627	HH Closed Tek
A3	1918	ShakerA 2
A#3	1917	ShakerA 1
B3	2714	Bd HipHop10
C4	2680	Bd +HH
C#4	3359	Sd HipHop12
D4	3364	Sd HipHop17
D#4	2453	HipHop Clap12
E4	2714	Bd HipHop10
F4	3355	Sd HipHop7
F#4	2455	HipHop Clap14
G4	2452	HipHop Clap11
G#4	1944	Triangle Mute
A4	1943	Triangle Open
A#4	1927	Tambourine1 Sw
B4	1918	ShakerA 2
C5	2712	Bd HipHop8
C#5	2423	Clap T9
D5	3293	Sd T8-1
D#5	3365	Sd HipHop18
E5	3296	Sd T8-4
F5	3856	Tom T8
F#5	3614	HH Closed T8-2
G5	3856	Tom T8
G#5	3614	HH Closed T8-2
A5	3856	Tom T8
A#5	3615	HH Open T8-2
B5	3856	Tom T8
C6	3972	Crash T8

UDR 5 PercussionMaster Kit

Note	Wave Number	Wave Name
C0	2110	Cowbell2
C#0	2135	Djembe2 Lo
D0	2136	Djembe2 Slap
D#0	2137	Djembe2 Mute
E0	2073	Pandeiro Open
F0	2076	Pandeiro Heel
F#0	2074	Pandeiro Thump
G0	2075	Pandeiro Tip
G#0	1936	Castanet2 Sw
A0	2140	Djembe3 Mute
A#0	2139	Djembe3 Slap
B0	2138	Djembe3 Lo
C1	2100	Cajon2 Lo
C#1	2099	Cajon2 Foot
D1	2101	Cajon2 Slap
D#1	1948	Hand Clap2 Sw
E1	2102	Cajon2 Mute
F1	3849	Rotary Tom Lo 1-2
F#1	2103	Cajon2 Tip
G1	2166	Sangban Sw
G#1	2104	Cajon2 Ghost1
A1	3846	Rotary Tom Mid 1-2
A#1	2105	Cajon2 Ghost2
B1	2166	Sangban Sw
C2	3843	Rotary Tom Hi 1-2
C#2	2169	Dundun Bell Sw
D2	2163	Kenkeni Sw
D#2	3915	Ride Brite St
E2	3959	China3 St
F2	3919	Ride Brite Cup St
F#2	1930	Tambourine2 Sw
G2	3967	Splash2 St
G#2	2111	Cowbell3 Sw
A2	2052	Paila H
A#2	1941	Vibraslap2
B2	2051	Paila L
C3	1984	Conga2 Hi Heel
C#3	1985	Conga2 Hi Tip
D3	1986	Conga2 Hi Slap 1-2
D#3	1992	Conga2 Hi Mute
E3	1989	Conga2 Hi Open 1-2
F3	2043	Timbale2 Hi Sw
F#3	2047	Timbale2 Lo Sw
G3	2118	ChaCha Bell Sw
G#3	2114	Mambo Bell Sw
A3	2062	CabasaB 1-4
A#3	2067	Caxixi 1-2
B3	2025	Bongo2 Hi Mute
C4	2026	Bongo2 Hi Open 1-2
C#4	2029	Bongo2 Lo Mute
D4	2030	Bongo2 Lo Open 1-2
D#4	2107	Claves2
E4	1958	Resin Block Small
F4	1959	Resin Block Large
F#4	1996	Conga2 Lo Slide
G4	1993	Conga2 Lo Open 1-2
G#4	1944	Triangle Mute
A4	1943	Triangle Open
A#4	1920	ShakerB Sw
B4	1957	Wind Chime
C5	2158	TalkingDrum Bend 1-4
C#5	2157	TalkingDrum Mute
D5	2155	TalkingDrum Open
D#5	2156	TalkingDrum Slap
E5	2124	Repique Open 1-2
F5	2123	Repique Mute
F#5	2151	Shekere Shake Sw
G5	2154	Shekere Slap
G#5	2121	Samba Tambourim Slap
A5	2120	Samba Tambourim Open
A#5	2122	Samba Tambourim Mute
B5	2093	Surdo2 Mute
C6	2092	Surdo2 Open

UDR 6 Nu Orchestra Kit

Note	Wave Number	Wave Name
C0	2107	Claves2
C#0	3209	Sd Brush Med L
D0	3219	Sd Brush Swir R
D#0	3209	Sd Brush Med L
E0	3222	Sd Brush SwirAtt R
F0	3256	Sd Orch Roll St
F#0	1936	Castanet2 Sw
G0	3223	Sd OrchA 1-2 St
G#0	1933	Stick1
A0	2639	Bd GranCasaB Mfl St
A#0	2636	Bd GranCasaB Hoop St
B0	2624	Bd GranCasaB 1-3 St
C1	2624	Bd GranCasaB 1-3 St
C#1	3101	Sd Beech ClRm St
D1	3241	Sd OrchC 1-4 St
D#1	1945	Hand Clap1 St
E1	3241	Sd OrchC 1-4 St
F1	3703	Tom Power05 1-2St
F#1	1961	OrchTamb Shake 1-2
G1	3703	Tom Power05 1-2St
G#1	1964	OrchTamb Hit Close
A1	3699	Tom Power04 2St
A#1	1965	OrchTamb Hit Open
B1	3699	Tom Power04 2St
C2	3679	Tom Power03 1-2St
C#2	3901	Hand Cymbal Open St
D2	3679	Tom Power03 1-2St
D#2	3930	Ride NJz RL
E2	3959	China3 St
F2	3934	Ride NJz Cup RL
F#2	1927	Tambourine1 Sw
G2	2148	Mondira
G#2	2111	Cowbell3 Sw
A2	3904	Hand Cymbal Mute St
A#2	1941	Vibraslap2
B2	3942	Ride Brush1 RL
C3	2618	Bd GranCasaA Open St
C#3	2621	Bd GranCasaA Mute St
D3	3262	Sd Field 1 St
D#3	1955	Sleigh Bell2
E3	3262	Sd Field 1 St
F3	1939	Wood Block
F#3	1939	Wood Block
G3	2457	HipHop Flex2
G#3	1944	Triangle Mute
A3	1943	Triangle Open
A#3	1920	ShakerB Sw
B3	2062	CabasaB 1-4
C4	284	Timpani2 Hard St-
C#4	284	Timpani2 Hard St-
D4	284	Timpani2 Hard St-
D#4	284	Timpani2 Hard St-
E4	284	Timpani2 Hard St-
F4	284	Timpani2 Hard St-
F#4	284	Timpani2 Hard St-
G4	284	Timpani2 Hard St-
G#4	284	Timpani2 Hard St-
A4	284	Timpani2 Hard St-
A#4	284	Timpani2 Hard St-
B4	284	Timpani2 Hard St-
C5	284	Timpani2 Hard St-
C#5	284	Timpani2 Hard St-
D5	284	Timpani2 Hard St-
D#5	284	Timpani2 Hard St-
E5	284	Timpani2 Hard St-
F5	284	Timpani2 Hard St-
F#5	284	Timpani2 Hard St-
G5	284	Timpani2 Hard St-
G#5	284	Timpani2 Hard St-
A5	284	Timpani2 Hard St-
A#5	284	Timpani2 Hard St-
B5	284	Timpani2 Hard St-
C6	284	Timpani2 Hard St-

UDR 7 Japan Kit

Note	Wave Number	Wave Name
C0	2441	Analog Click
C#0	2178	Wa Taiko
D0	2178	Wa Taiko
D#0	2178	Wa Taiko
E0	2178	Wa Taiko
F0	2178	Wa Taiko
F#0	2178	Wa Taiko
G0	2178	Wa Taiko
G#0	1955	Sleigh Bell2
A0	2183	Oo Taiko2 Zu
A#0	2184	Oo Taiko2 Ka
B0	2182	Oo Taiko2 Don Hard
C1	2182	Oo Taiko2 Don Hard
C#1	2184	Oo Taiko2 Ka
D1	2192	Shime Taiko1 Tsu
D#1	2193	Shime Taiko1 Ku
E1	2191	Shime Taiko1 Ten
F1	2188	Yagura Taiko2 Don
F#1	2175	Chanchiki Ki
G1	2189	Yagura Taiko2 Zu
G#1	2175	Chanchiki Ki
A1	2190	Yagura Taiko2 Ka
A#1	2174	Chanchiki Chan
B1	2179	Oo Taiko1 Don
C2	2179	Oo Taiko1 Don
C#2	2180	Oo Taiko1 Ka
D2	2195	Shime Taiko2 Tsu
D#2	2196	Shime Taiko2 Ku
E2	2194	Shime Taiko2 Ten
F2	2185	Yagura Taiko1 Don
F#2	2177	Atarigane Chi
G2	2186	Yagura Taiko1 Zu
G#2	2177	Atarigane Chi
A2	2187	Yagura Taiko1 Ka
A#2	2176	Atarigane Con
B2	2203	Oo Kawa Ton
C3	2201	Oo Kawa Chon
C#3	2202	Oo Kawa Tsu
D3	2197	Tsuzumi Pon
D#3	2199	Tsuzumi Chi
E3	2198	Tsuzumi Pu
F3	2200	Tsuzumi Ta
F#3	2172	Ainote 1
G3	2197	Tsuzumi Pon
G#3	2199	Tsuzumi Chi
A3	2198	Tsuzumi Pu
A#3	2173	Ainote 2
B3	2200	Tsuzumi Ta
C4	2191	Shime Taiko1 Ten
C#4	2191	Shime Taiko1 Ten
D4	2191	Shime Taiko1 Ten
D#4	2191	Shime Taiko1 Ten
E4	2191	Shime Taiko1 Ten
F4	2191	Shime Taiko1 Ten
F#4	2191	Shime Taiko1 Ten
G4	2191	Shime Taiko1 Ten
G#4	2191	Shime Taiko1 Ten
A4	2191	Shime Taiko1 Ten
A#4	2191	Shime Taiko1 Ten
B4	2191	Shime Taiko1 Ten
C5	1270	Pan Flute
C#5	1270	Pan Flute
D5	1270	Pan Flute
D#5	1270	Pan Flute
E5	1270	Pan Flute
F5	1270	Pan Flute
F#5	1270	Pan Flute
G5	1270	Pan Flute
G#5	1270	Pan Flute
A5	1270	Pan Flute
A#5	1270	Pan Flute
B5	1270	Pan Flute
C6	1270	Pan Flute

UDR 8 Turkish Kit

Note	Wave Number	Wave Name
C0	2106	Claves1
C#0	2235	AsmaDavul L Side 1-2
D0	2239	AsmaDavul R Side 1-2
D#0	2232	AsmaDavulSideBdy 1-2
E0	2238	AsmaDavul Both Sides
F0	2253	KoltukDavulOpenFlam
F#0	2245	KoltukDavulTekeOp1-3
G0	2249	KoltukDavulTekOp 1-3
G#0	2242	Koltuk Davul Dum 1-2
A0	2265	Bendir Teke OpenFlam
A#0	2272	Bendir Teke Dead 1-2
B0	2269	Bendir Tek Dead 1-2
C1	2261	Bendir Teke 1-3
C#1	2257	Bendir Tek 1-3
D1	2266	Bendir Slap 1-2
D#1	2254	Bendir Dum 1-2
E1	2276	Sagat R Close 1-2
F1	2275	Sagat R Open
F#1	2280	Sagat L Close 1-2
G1	2279	Sagat L Open
G#1	2296	Riq Teke Flam
A1	2290	Riq Tek Mute 1-2
A#1	2293	Riq Teke Damped 1-2
B1	2297	RiqTekMuteMed 1-2
C2	2283	Riq Dum Mute
C#2	2307	Riq Cymbal 1-2
D2	2310	Riq Cymbal Mute 1-2
D#2	2320	Riq Tremolo
E2	2314	Riq ShakeA 1-2
F2	2317	Riq ShakeB 1-2
F#2	2306	Riq Tek Flam
G2	2313	Riq Full Open
G#2	2303	RiqTekeOpenShort 1-2
A2	2300	RiqTekOpenShort 1-2
A#2	2287	Riq Tek Open 1-2
B2	2284	Riq Dum Open 1-2
C3	2327	Hollo FingerDead 1-2
C#3	2324	Hollo Slap 1-2
D3	2321	Hollo Dum 1-2
D#3	2407	Kasik 1-2
E3	2411	Kasik Flam
F3	2348	Tombek Tek Dead Sw
F#3	2350	Tombek Tek Flam
G3	2354	Tombek Teke 1-3
G#3	2344	TombekTekeOthFng 1-3
A3	2340	TombekTekeIndFng 1-3
A#3	2336	Tombek Tek 1-3
B3	2333	Tombek Slap 1-2
C4	2351	Tombek Slap Med 1-2
C#4	2330	Tombek Dum 1-2
D4	2394	Darbuka Roll Close
D#4	2392	Darbuka RollOpen
E4	2393	Darbuka TekeDampFlam
F4	2395	Darbuka TekDead 1-3
F#4	2399	Darbuka TekDampd 1-3
G4	2391	Darbuka TekeOpenFlam
G#4	2403	Darbuka TekeOpen 1-3
A4	2377	DarbTekeOthFingA 1-3
A#4	2369	DarbTekeIndFingA 1-3
B4	2361	Darbuka TekA 1-3
C5	2381	DarbTekeOthFingB 1-3
C#5	2373	DarbTekeIndFingB 1-3
D5	2365	Darbuka TekB 1-3
D#5	2388	Darbuka SlapMed 1-2
E5	2385	Darbuka Slap 1-2
F5	2358	Darbuka Dum 1-2
F#5	2420	Bonges Tek Roll
G5	2421	Bonges Flam
G#5	2419	Bonges Tek Flam
A5	2415	Bonges Tek 1-2
A#5	2418	Bonges Slap
B5	2422	Bonges Flam Hi
C6	2412	Bonges Dum 1-2

Waveform List

No.	Name	Main Category	Sub Category
1	CF3 Stretch Sw St	Ap	Pno
2	CF3 Stretch Sw Mn	Ap	Pno
3	CF3 Stretch Soft St	Ap	Pno
4	CF3 Stretch Soft Mn	Ap	Pno
5	CF3 Stretch Soft St+	Ap	Pno
6	CF3 Stretch Soft Mn+	Ap	Pno
7	CF3 Stretch Soft St-	Ap	Pno
8	CF3 Stretch Soft Mn-	Ap	Pno
9	CF3 Stretch Med St	Ap	Pno
10	CF3 Stretch Med Mn	Ap	Pno
11	CF3 Stretch Med St+	Ap	Pno
12	CF3 Stretch Med Mn+	Ap	Pno
13	CF3 Stretch Med St-	Ap	Pno
14	CF3 Stretch Med Mn-	Ap	Pno
15	CF3 Stretch Hard St	Ap	Pno
16	CF3 Stretch Hard Mn	Ap	Pno
17	CF3 Stretch Hard St+	Ap	Pno
18	CF3 Stretch Hard Mn+	Ap	Pno
19	CF3 Stretch Hard St-	Ap	Pno
20	CF3 Stretch Hard Mn-	Ap	Pno
21	CF3 Key Off St	Ap	Pno
22	CF3 Key Off L	Ap	Pno
23	CF3 Key Off R	Ap	Pno
24	CF3 Flat Sw St	Ap	Pno
25	CF3 Flat Sw Mn	Ap	Pno
26	CF3 Flat Soft St	Ap	Pno
27	CF3 Flat Soft Mn	Ap	Pno
28	CF3 Flat Soft St+	Ap	Pno
29	CF3 Flat Soft Mn+	Ap	Pno
30	CF3 Flat Soft St-	Ap	Pno
31	CF3 Flat Soft Mn-	Ap	Pno
32	CF3 Flat Med St	Ap	Pno
33	CF3 Flat Med Mn	Ap	Pno
34	CF3 Flat Med St+	Ap	Pno
35	CF3 Flat Med Mn+	Ap	Pno
36	CF3 Flat Med St-	Ap	Pno
37	CF3 Flat Med Mn-	Ap	Pno
38	CF3 Flat Hard St	Ap	Pno
39	CF3 Flat Hard Mn	Ap	Pno
40	CF3 Flat Hard St+	Ap	Pno
41	CF3 Flat Hard Mn+	Ap	Pno
42	CF3 Flat Hard St-	Ap	Pno
43	CF3 Flat Hard Mn-	Ap	Pno
44	S6 Stretch pp St	Ap	Pno
45	S6 Stretch pp Mn	Ap	Pno
46	S6 Stretch pp L	Ap	Pno
47	S6 Stretch pp R	Ap	Pno
48	S6 Stretch pp St Pan	Ap	Pno
49	S6 Stretch pp St+	Ap	Pno
50	S6 Stretch pp Mn+	Ap	Pno
51	S6 Stretch pp St-	Ap	Pno
52	S6 Stretch pp Mn-	Ap	Pno
53	S6 Stretch mp St	Ap	Pno
54	S6 Stretch mp Mn	Ap	Pno
55	S6 Stretch mp L	Ap	Pno
56	S6 Stretch mp R	Ap	Pno
57	S6 Stretch mp St Pan	Ap	Pno
58	S6 Stretch mp St+	Ap	Pno
59	S6 Stretch mp Mn+	Ap	Pno
60	S6 Stretch mp St-	Ap	Pno
61	S6 Stretch mp Mn-	Ap	Pno
62	S6 Stretch mf St	Ap	Pno
63	S6 Stretch mf Mn	Ap	Pno
64	S6 Stretch mf L	Ap	Pno
65	S6 Stretch mf R	Ap	Pno
66	S6 Stretch mf St Pan	Ap	Pno
67	S6 Stretch mf St+	Ap	Pno
68	S6 Stretch mf Mn+	Ap	Pno
69	S6 Stretch mf St-	Ap	Pno
70	S6 Stretch mf Mn-	Ap	Pno
71	S6 Stretch ff St	Ap	Pno
72	S6 Stretch ff Mn	Ap	Pno
73	S6 Stretch ff L	Ap	Pno
74	S6 Stretch ff R	Ap	Pno
75	S6 Stretch ff St Pan	Ap	Pno
76	S6 Stretch ff St+	Ap	Pno
77	S6 Stretch ff Mn+	Ap	Pno
78	S6 Stretch ff St-	Ap	Pno
79	S6 Stretch ff Mn-	Ap	Pno

No.	Name	Main Category	Sub Category
80	S6 Stretch Sw St	Ap	Pno
81	S6 Stretch Sw Mn	Ap	Pno
82	S6 Stretch Sw L	Ap	Pno
83	S6 Stretch Sw R	Ap	Pno
84	S6 Stretch Sw St Pan	Ap	Pno
85	S6 Stretch Sw St2	Ap	Pno
86	S6 Stretch Sw St+	Ap	Pno
87	S6 Stretch Sw Mn+	Ap	Pno
88	S6 Stretch Sw St-	Ap	Pno
89	S6 Stretch Sw Mn-	Ap	Pno
90	S6 Stretch KeyOff St	Ap	Pno
91	S6 Stretch KeyOff Mn	Ap	Pno
92	S6 Stretch KeyOff L	Ap	Pno
93	S6 Stretch KeyOff R	Ap	Pno
94	S6 Stretch KeyOfStPn	Ap	Pno
95	S6 Flat pp St	Ap	Pno
96	S6 Flat pp Mn	Ap	Pno
97	S6 Flat pp L	Ap	Pno
98	S6 Flat pp R	Ap	Pno
99	S6 Flat pp St Pan	Ap	Pno
100	S6 Flat pp St+	Ap	Pno
101	S6 Flat pp Mn+	Ap	Pno
102	S6 Flat pp St-	Ap	Pno
103	S6 Flat pp Mn-	Ap	Pno
104	S6 Flat mp St	Ap	Pno
105	S6 Flat mp Mn	Ap	Pno
106	S6 Flat mp L	Ap	Pno
107	S6 Flat mp R	Ap	Pno
108	S6 Flat mp St Pan	Ap	Pno
109	S6 Flat mp St+	Ap	Pno
110	S6 Flat mp Mn+	Ap	Pno
111	S6 Flat mp St-	Ap	Pno
112	S6 Flat mp Mn-	Ap	Pno
113	S6 Flat mf St	Ap	Pno
114	S6 Flat mf Mn	Ap	Pno
115	S6 Flat mf L	Ap	Pno
116	S6 Flat mf R	Ap	Pno
117	S6 Flat mf St Pan	Ap	Pno
118	S6 Flat mf St+	Ap	Pno
119	S6 Flat mf Mn+	Ap	Pno
120	S6 Flat mf St-	Ap	Pno
121	S6 Flat mf Mn-	Ap	Pno
122	S6 Flat ff St	Ap	Pno
123	S6 Flat ff Mn	Ap	Pno
124	S6 Flat ff L	Ap	Pno
125	S6 Flat ff R	Ap	Pno
126	S6 Flat ff St Pan	Ap	Pno
127	S6 Flat ff St+	Ap	Pno
128	S6 Flat ff Mn+	Ap	Pno
129	S6 Flat ff St-	Ap	Pno
130	S6 Flat ff Mn-	Ap	Pno
131	S6 Flat Sw St	Ap	Pno
132	S6 Flat Sw Mn	Ap	Pno
133	S6 Flat Sw L	Ap	Pno
134	S6 Flat Sw R	Ap	Pno
135	S6 Flat Sw St Pan	Ap	Pno
136	S6 Flat Sw St2	Ap	Pno
137	S6 Flat Sw St+	Ap	Pno
138	S6 Flat Sw Mn+	Ap	Pno
139	S6 Flat Sw St-	Ap	Pno
140	S6 Flat Sw Mn-	Ap	Pno
141	S6 Flat KeyOff St	Ap	Pno
142	S6 Flat KeyOff Mn	Ap	Pno
143	S6 Flat KeyOff L	Ap	Pno
144	S6 Flat KeyOff R	Ap	Pno
145	S6 Flat KeyOff StPan	Ap	Pno
146	Brite Piano	Ap	Pno
147	Brite Piano-	Ap	Pno
148	EP1 Sw	Kb	Rds
149	EP1 Soft	Kb	Rds
150	EP1 Soft+	Kb	Rds
151	EP1 Soft-	Kb	Rds
152	EP1 Med	Kb	Rds
153	EP1 Med+	Kb	Rds
154	EP1 Med-	Kb	Rds
155	EP1 Hard	Kb	Rds
156	EP1 Hard+	Kb	Rds
157	EP1 Hard-	Kb	Rds
158	EP2 Sw	Kb	Rds

No.	Name	Main Category	Sub Category
159	EP2 Soft1	Kb	Rds
160	EP2 Soft1+	Kb	Rds
161	EP2 Soft1-	Kb	Rds
162	EP2 Soft2	Kb	Rds
163	EP2 Soft2+	Kb	Rds
164	EP2 Soft2-	Kb	Rds
165	EP2 Hard1	Kb	Rds
166	EP2 Hard1+	Kb	Rds
167	EP2 Hard1-	Kb	Rds
168	EP2 Hard2	Kb	Rds
169	EP2 Hard2+	Kb	Rds
170	EP2 Hard2-	Kb	Rds
171	EP3 Sw	Kb	Rds
172	EP3 Soft1	Kb	Rds
173	EP3 Soft1+	Kb	Rds
174	EP3 Soft1-	Kb	Rds
175	EP3 Soft2	Kb	Rds
176	EP3 Soft2+	Kb	Rds
177	EP3 Soft2-	Kb	Rds
178	EP3 Hard1	Kb	Rds
179	EP3 Hard1+	Kb	Rds
180	EP3 Hard1-	Kb	Rds
181	EP3 Hard2	Kb	Rds
182	EP3 Hard2+	Kb	Rds
183	EP3 Hard2-	Kb	Rds
184	EP Key Off	Kb	Rds
185	Wurli EP Soft	Kb	Wur
186	Wurli EP Soft+	Kb	Wur
187	Wurli EP Soft-	Kb	Wur
188	Wurli EP Med	Kb	Wur
189	Wurli EP Med+	Kb	Wur
190	Wurli EP Med-	Kb	Wur
191	Wurli EP Hard	Kb	Wur
192	Wurli EP Hard+	Kb	Wur
193	Wurli EP Hard-	Kb	Wur
194	Wurli EP Key Off	Kb	Wur
195	DX1	Kb	FM
196	DX2	Kb	FM
197	DX3	Kb	FM
198	DX4	Kb	FM
199	DX Body Soft	Kb	FM
200	DX Body Med	Kb	FM
201	DX Body Hard	Kb	FM
202	DX Attack1	Kb	FM
203	DX Attack2	Kb	FM
204	DX Attack3	Kb	FM
205	DX Attack4	Kb	FM
206	DX Attack5	Kb	FM
207	Clav1	Kb	Clavi
208	Clav1+	Kb	Clavi
209	Clav1-	Kb	Clavi
210	Clav2	Kb	Clavi
211	Clav2+	Kb	Clavi
212	Clav2-	Kb	Clavi
213	Clav3	Kb	Clavi
214	Clav3+	Kb	Clavi
215	Clav3-	Kb	Clavi
216	Clav4 Med	Kb	Clavi
217	Clav4 Med +	Kb	Clavi
218	Clav4 Med -	Kb	Clavi
219	Clav4 Hard	Kb	Clavi
220	Clav4 Hard +	Kb	Clavi
221	Clav4 Hard -	Kb	Clavi
222	Clav Key Off 1	Kb	Clavi
223	Clav Key Off 2	Kb	Clavi
224	Harpsichord1	Kb	Other
225	Harpsichord2 St	Kb	Other
226	Harpsichord2 L	Kb	Other
227	Harpsichord2 R	Kb	Other
228	Harpsichord2 St+	Kb	Other
229	Harpsichord2 L+	Kb	Other
230	Harpsichord2 R+	Kb	Other
231	Harpsichord2 St-	Kb	Other
232	Harpsichord2 L-	Kb	Other
233	Harpsichord2 R-	Kb	Other
234	Harpsichord2 KOf St	Kb	Other
235	Harpsichord2 KOf L	Kb	Other
236	Harpsichord2 KOf R	Kb	Other
237	CP70	Kb	Other

No.	Name	Main Category	Sub Category
238	CP70+	Kb	Other
239	CP70-	Kb	Other
240	Celesta	Kb	Other
241	Vibraphone1	Cp	Malet
242	Vibraphone2 Med	Cp	Malet
243	Vibraphone2 Med+	Cp	Malet
244	Vibraphone2 Med-	Cp	Malet
245	Vibraphone2 Hard	Cp	Malet
246	Vibraphone2 Hard+	Cp	Malet
247	Vibraphone2 Hard-	Cp	Malet
248	Marimba	Cp	Malet
249	Glockenspiel	Cp	Malet
250	Xylophone	Cp	Malet
251	Timpani1 Sw St	Cp	Malet
252	Timpani1 Soft St	Cp	Malet
253	Timpani1 Hard St	Cp	Malet
254	Timpani1 Sw L	Cp	Malet
255	Timpani1 Soft L	Cp	Malet
256	Timpani1 Hard L	Cp	Malet
257	Timpani1 Sw R	Cp	Malet
258	Timpani1 Soft R	Cp	Malet
259	Timpani1 Hard R	Cp	Malet
260	Timpani2 Soft St	Cp	Malet
261	Timpani2 Soft L	Cp	Malet
262	Timpani2 Soft R	Cp	Malet
263	Timpani2 Soft St+	Cp	Malet
264	Timpani2 Soft L+	Cp	Malet
265	Timpani2 Soft R+	Cp	Malet
266	Timpani2 Soft St-	Cp	Malet
267	Timpani2 Soft L-	Cp	Malet
268	Timpani2 Soft R-	Cp	Malet
269	Timpani2 Med St	Cp	Malet
270	Timpani2 Med L	Cp	Malet
271	Timpani2 Med R	Cp	Malet
272	Timpani2 Med St+	Cp	Malet
273	Timpani2 Med L+	Cp	Malet
274	Timpani2 Med R+	Cp	Malet
275	Timpani2 Med St-	Cp	Malet
276	Timpani2 Med L-	Cp	Malet
277	Timpani2 Med R-	Cp	Malet
278	Timpani2 Hard St	Cp	Malet
279	Timpani2 Hard L	Cp	Malet
280	Timpani2 Hard R	Cp	Malet
281	Timpani2 Hard St+	Cp	Malet
282	Timpani2 Hard L+	Cp	Malet
283	Timpani2 Hard R+	Cp	Malet
284	Timpani2 Hard St-	Cp	Malet
285	Timpani2 Hard L-	Cp	Malet
286	Timpani2 Hard R-	Cp	Malet
287	Timpani2 Muffl St	Cp	Malet
288	Timpani2 Muffl L	Cp	Malet
289	Timpani2 Muffl R	Cp	Malet
290	Timpani2 Oct Soft St	Cp	Malet
291	Timpani2 Oct Soft L	Cp	Malet
292	Timpani2 Oct Soft R	Cp	Malet
293	Timpani2 Oct SoftSt+	Cp	Malet
294	Timpani2 Oct Soft L+	Cp	Malet
295	Timpani2 Oct Soft R+	Cp	Malet
296	Timpani2 Oct SoftSt-	Cp	Malet
297	Timpani2 Oct Soft L-	Cp	Malet
298	Timpani2 Oct Soft R-	Cp	Malet
299	Timpani2 Oct Med St	Cp	Malet
300	Timpani2 Oct Med L	Cp	Malet
301	Timpani2 Oct Med R	Cp	Malet
302	Timpani2 Oct Med St+	Cp	Malet
303	Timpani2 Oct Med L+	Cp	Malet
304	Timpani2 Oct Med R+	Cp	Malet
305	Timpani2 Oct Med St-	Cp	Malet
306	Timpani2 Oct Med L-	Cp	Malet
307	Timpani2 Oct Med R-	Cp	Malet
308	Timpani2 Oct Hard St	Cp	Malet
309	Timpani2 Oct Hard L	Cp	Malet
310	Timpani2 Oct Hard R	Cp	Malet
311	Timpani2 Oct HardSt+	Cp	Malet
312	Timpani2 Oct Hard L+	Cp	Malet
313	Timpani2 Oct Hard R+	Cp	Malet
314	Timpani2 Oct HardSt-	Cp	Malet
315	Timpani2 Oct Hard L-	Cp	Malet
316	Timpani2 Oct Hard R-	Cp	Malet

No.	Name	Main Category	Sub Category
317	Timpani2 Oct Mffl St	Cp	Malet
318	Timpani2 Oct Muffl L	Cp	Malet
319	Timpani2 Oct Muffl R	Cp	Malet
320	Tubular Bell1	Cp	Other
321	Tubular Bell2	Cp	Other
322	Bell	Cp	Other
323	Bell St1	Cp	Other
324	Bell St2	Cp	Other
325	Brass Bell	Cp	Other
326	Small Bell	Cp	Other
327	Finger Cymbal	Cp	Other
328	Hand Bell	Cp	Other
329	Hibashi	Cp	Other
330	Stone Hard	Cp	Other
331	Stone Soft	Cp	Other
332	Wood Bell1	Cp	Other
333	Wood Bell2	Cp	Other
334	Kalimba	Cp	Other
335	Gamelan1	Cp	Other
336	Gamelan2	Cp	Other
337	Steel Drum	Cp	Other
338	Rock Chorus Vibrato	Or	TnWhl
339	Rock Percussion	Or	TnWhl
340	Rock2	Or	TnWhl
341	Rock2+	Or	TnWhl
342	Rock2-	Or	TnWhl
343	Jazz w/Percussion	Or	TnWhl
344	Jazz w/Percussion-	Or	TnWhl
345	Jazz	Or	TnWhl
346	Jazz+	Or	TnWhl
347	Jazz-	Or	TnWhl
348	Full Draw	Or	TnWhl
349	Full Draw+	Or	TnWhl
350	Full Draw-	Or	TnWhl
351	Swish	Or	TnWhl
352	Swish-	Or	TnWhl
353	Bow	Or	TnWhl
354	Bow Chorus Vibrato	Or	TnWhl
355	Gospel	Or	TnWhl
356	Soul	Or	TnWhl
357	1st Four Draw	Or	TnWhl
358	Draw 16'	Or	TnWhl
359	Draw 5 1/3	Or	TnWhl
360	Draw 8'	Or	TnWhl
361	Draw 4'	Or	TnWhl
362	Draw 2 2/3	Or	TnWhl
363	Draw 2'	Or	TnWhl
364	Draw 1 3/5	Or	TnWhl
365	Draw 1 1/3	Or	TnWhl
366	Draw 1'	Or	TnWhl
367	Draw 16' Of	Or	TnWhl
368	Draw 5 1/3 Of	Or	TnWhl
369	Draw 8' Of	Or	TnWhl
370	Draw 4' Of	Or	TnWhl
371	Draw 2 2/3 Of	Or	TnWhl
372	Draw 2' Of	Or	TnWhl
373	Draw 1 3/5 Of	Or	TnWhl
374	Draw 1 1/3 Of	Or	TnWhl
375	Draw 1' Of	Or	TnWhl
376	Draw 1+3	Or	TnWhl
377	Draw 1+3+	Or	TnWhl
378	Draw 1+3-	Or	TnWhl
379	Draw 2+4	Or	TnWhl
380	Draw 2+4+	Or	TnWhl
381	Draw 2+4-	Or	TnWhl
382	Draw Even	Or	TnWhl
383	Draw Even+	Or	TnWhl
384	Draw Even-	Or	TnWhl
385	Draw Odd	Or	TnWhl
386	Draw Odd+	Or	TnWhl
387	Draw Odd-	Or	TnWhl
388	Percussion	Or	TnWhl
389	Percussion+	Or	TnWhl
390	Percussion-	Or	TnWhl
391	Tonewheel Key Click	Or	TnWhl
392	Clack 1	Or	TnWhl
393	Clack 2	Or	TnWhl
394	Rotor	Or	TnWhl
395	Rotor Whistle	Or	TnWhl

No.	Name	Main Category	Sub Category
396	Rotor Grit1	Or	TnWhl
397	Rotor Grit2	Or	TnWhl
398	Compact Electronic	Or	Other
399	Compact Electronic-	Or	Other
400	Portable Electronic	Or	Other
401	Portable Electronic-	Or	Other
402	Fr All Tabs	Or	Other
403	Fr Bright Boost	Or	Other
404	Fr Flute	Or	Other
405	Fr String Lo	Or	Other
406	Fr String Hi	Or	Other
407	Fr Trumpet	Or	Other
408	Fr Piccolo	Or	Other
409	Fr Pedal	Or	Other
410	Fr KeyOff	Or	Other
411	Vx Drawbar1-3	Or	Other
412	Vx DrawbarIV	Or	Other
413	Vx KeyOff	Or	Other
414	Pipe Organ1 St	Or	Other
415	Pipe Organ1 L	Or	Other
416	Pipe Organ1 R	Or	Other
417	Pipe Organ2	Or	Other
418	Pipe Organ3 St	Or	Other
419	Pipe Organ3 L	Or	Other
420	Pipe Organ3 R	Or	Other
421	Pipe Organ4	Or	Other
422	Pipe Organ5	Or	Other
423	Harmonium Side	Or	Other
424	Harmonium Main	Or	Other
425	Accordion1	Or	Other
426	Accordion2	Or	Other
427	Accordion3	Or	Other
428	Tango Accordion1	Or	Other
429	Tango Accordion2	Or	Other
430	Tango Accordion Bass	Or	Other
431	Mussete Accordion	Or	Other
432	Steirisch Accordion	Or	Other
433	Nylon Open Soft St	Gt	A.Gtr
434	Nylon Open Soft L	Gt	A.Gtr
435	Nylon Open Soft R	Gt	A.Gtr
436	Nylon Open Med St	Gt	A.Gtr
437	Nylon Open Med L	Gt	A.Gtr
438	Nylon Open Med R	Gt	A.Gtr
439	Nylon Open Hard St	Gt	A.Gtr
440	Nylon Open Hard L	Gt	A.Gtr
441	Nylon Open Hard R	Gt	A.Gtr
442	Nylon Open Sw St	Gt	A.Gtr
443	Nylon Open Sw L	Gt	A.Gtr
444	Nylon Open Sw R	Gt	A.Gtr
445	Nylon Open Sw Kb St	Gt	A.Gtr
446	Nylon Open Sw Kb L	Gt	A.Gtr
447	Nylon Open Sw Kb R	Gt	A.Gtr
448	Nylon Dead Notes St	Gt	A.Gtr
449	Nylon Dead Notes L	Gt	A.Gtr
450	Nylon Dead Notes R	Gt	A.Gtr
451	Nylon Mute St	Gt	A.Gtr
452	Nylon Mute L	Gt	A.Gtr
453	Nylon Mute R	Gt	A.Gtr
454	Nylon Hammer On St	Gt	A.Gtr
455	Nylon Hammer On L	Gt	A.Gtr
456	Nylon Hammer On R	Gt	A.Gtr
457	Nylon Slide St	Gt	A.Gtr
458	Nylon Slide L	Gt	A.Gtr
459	Nylon Slide R	Gt	A.Gtr
460	Nylon Harmonics St	Gt	A.Gtr
461	Nylon Harmonics L	Gt	A.Gtr
462	Nylon Harmonics R	Gt	A.Gtr
463	Nylon FX St	Gt	A.Gtr
464	Nylon FX L	Gt	A.Gtr
465	Nylon FX R	Gt	A.Gtr
466	Steel Open Soft St	Gt	A.Gtr
467	Steel Open Soft L	Gt	A.Gtr
468	Steel Open Soft R	Gt	A.Gtr
469	Steel Open Med St	Gt	A.Gtr
470	Steel Open Med L	Gt	A.Gtr
471	Steel Open Med R	Gt	A.Gtr
472	Steel Open Hard St	Gt	A.Gtr
473	Steel Open Hard L	Gt	A.Gtr
474	Steel Open Hard R	Gt	A.Gtr

No.	Name	Main Category	Sub Category
475	Steel Open Sw St	Gt	A.Gtr
476	Steel Open Sw L	Gt	A.Gtr
477	Steel Open Sw R	Gt	A.Gtr
478	Steel Open Sw Kb St	Gt	A.Gtr
479	Steel Open Sw Kb L	Gt	A.Gtr
480	Steel Open Sw Kb R	Gt	A.Gtr
481	Steel Hammer On St	Gt	A.Gtr
482	Steel Hammer On L	Gt	A.Gtr
483	Steel Hammer On R	Gt	A.Gtr
484	Steel Slide St	Gt	A.Gtr
485	Steel Slide L	Gt	A.Gtr
486	Steel Slide R	Gt	A.Gtr
487	Steel Harmonics St	Gt	A.Gtr
488	Steel Harmonics L	Gt	A.Gtr
489	Steel Harmonics R	Gt	A.Gtr
490	Steel Mute St	Gt	A.Gtr
491	Steel Mute L	Gt	A.Gtr
492	Steel Mute R	Gt	A.Gtr
493	Steel Dead Notes St	Gt	A.Gtr
494	Steel Dead Notes L	Gt	A.Gtr
495	Steel Dead Notes R	Gt	A.Gtr
496	Steel FX St	Gt	A.Gtr
497	Steel FX L	Gt	A.Gtr
498	Steel FX R	Gt	A.Gtr
499	High Strings Soft St	Gt	A.Gtr
500	High Strings Soft L	Gt	A.Gtr
501	High Strings Soft R	Gt	A.Gtr
502	High Strings Hard St	Gt	A.Gtr
503	High Strings Hard L	Gt	A.Gtr
504	High Strings Hard R	Gt	A.Gtr
505	High Strings FX St	Gt	A.Gtr
506	High Strings FX L	Gt	A.Gtr
507	High Strings FX R	Gt	A.Gtr
508	High Strings FX2 St	Gt	A.Gtr
509	Clean Open Med	Gt	E.Cln
510	Clean Open Hard	Gt	E.Cln
511	Clean Open Sw	Gt	E.Cln
512	Clean Open Sw Kb	Gt	E.Cln
513	Clean Hammer On	Gt	E.Cln
514	Clean Slap	Gt	E.Cln
515	Clean Slide	Gt	E.Cln
516	Clean Harmonics	Gt	E.Cln
517	Clean Mute	Gt	E.Cln
518	Clean Dead	Gt	E.Cln
519	Clean FX	Gt	E.Cln
520	60s Clean Open Soft	Gt	E.Cln
521	60s Clean Open Med	Gt	E.Cln
522	60s Clean Open Hard	Gt	E.Cln
523	60s Clean Open Sw	Gt	E.Cln
524	60s Clean Open Sw Kb	Gt	E.Cln
525	60s Clean Open Sw2	Gt	E.Cln
526	60s Clean Dead	Gt	E.Cln
527	60s Clean Mute	Gt	E.Cln
528	60s Clean Hammer On	Gt	E.Cln
529	60s Clean Slide	Gt	E.Cln
530	60s Clean Harmonics	Gt	E.Cln
531	60s Clean FX	Gt	E.Cln
532	60s Clean Slap	Gt	E.Cln
533	1Coil Open Sw	Gt	E.Cln
534	1Coil Open Soft	Gt	E.Cln
535	1Coil Open Med	Gt	E.Cln
536	1Coil Open Hard	Gt	E.Cln
537	1Coil Dead	Gt	E.Cln
538	1Coil Mute	Gt	E.Cln
539	1Coil Hammer On	Gt	E.Cln
540	1Coil Slide	Gt	E.Cln
541	1Coil Harmonics	Gt	E.Cln
542	1Coil FX	Gt	E.Cln
543	Jazz Guitar	Gt	E.Cln
544	Jazz Open Soft	Gt	E.Cln
545	Jazz Open Med	Gt	E.Cln
546	Jazz Open Hard	Gt	E.Cln
547	Jazz Open Sw	Gt	E.Cln
548	Jazz Dead Med	Gt	E.Cln
549	Jazz Dead Hard	Gt	E.Cln
550	Jazz Hammer On	Gt	E.Cln
551	Jazz Slide	Gt	E.Cln
552	Jazz Harmonics	Gt	E.Cln
553	Jazz FX	Gt	E.Cln

No.	Name	Main Category	Sub Category
554	Vintage Amp1	Gt	E.Cln
555	Vintage Amp2	Gt	E.Cln
556	Neck Pickup	Gt	E.Cln
557	Distortion Open	Gt	E.Dst
558	Distortion Harmonics	Gt	E.Dst
559	Distortion Mute	Gt	E.Dst
560	Overdrive Open	Gt	E.Dst
561	Overdrive Mute	Gt	E.Dst
562	Distortion FX	Gt	E.Dst
563	Dist/Overdrive FX	Gt	E.Dst
564	Feedback	Gt	E.Dst
565	Power Chord St	Gt	E.Dst
566	Power Chord Mono	Gt	E.Dst
567	Play FX Mix	Gt	E.Dst
568	Power Chord FX St	Gt	E.Dst
569	Power Chord FX Mono	Gt	E.Dst
570	Banjo1	Gt	Ethnc
571	Banjo2 Med	Gt	Ethnc
572	Banjo2 Med+	Gt	Ethnc
573	Banjo2 Med-	Gt	Ethnc
574	Banjo2 Hard	Gt	Ethnc
575	Banjo2 Hard+	Gt	Ethnc
576	Banjo2 Hard-	Gt	Ethnc
577	Sitar1	Gt	Ethnc
578	Sitar2 Soft	Gt	Ethnc
579	Sitar2 Soft+	Gt	Ethnc
580	Sitar2 Soft-	Gt	Ethnc
581	Sitar2 Med	Gt	Ethnc
582	Sitar2 Med+	Gt	Ethnc
583	Sitar2 Med-	Gt	Ethnc
584	Sitar2 Hard	Gt	Ethnc
585	Sitar2 Hard+	Gt	Ethnc
586	Sitar2 Hard-	Gt	Ethnc
587	Sitar Waves1	Gt	Ethnc
588	Sitar Waves2	Gt	Ethnc
589	Sitar Waves3	Gt	Ethnc
590	Sitar Waves4	Gt	Ethnc
591	Sitar Waves5	Gt	Ethnc
592	Sitar Waves6	Gt	Ethnc
593	Tambura	Gt	Ethnc
594	Tambura Waves1	Gt	Ethnc
595	Tambura Waves2	Gt	Ethnc
596	Tambura Waves3	Gt	Ethnc
597	Santur	Gt	Ethnc
598	Ud	Gt	Ethnc
599	Kanun	Gt	Ethnc
600	Baglama	Gt	Ethnc
601	Bouzouki	Gt	Ethnc
602	Shamisen	Gt	Ethnc
603	Koto	Gt	Ethnc
604	Acoustic Med	Ba	ABass
605	Acoustic Hard	Ba	ABass
606	Acoustic Harmonics	Ba	ABass
607	Acoustic Dead	Ba	ABass
608	Acoustic FX1	Ba	ABass
609	Acoustic FX2	Ba	ABass
610	Acoustic Med+	Ba	ABass
611	Acoustic Hard+	Ba	ABass
612	Acoustic Med-	Ba	ABass
613	Acoustic Hard-	Ba	ABass
614	Pick Open	Ba	EBass
615	Pick Harmonics	Ba	EBass
616	Pick Mute	Ba	EBass
617	Pick Dead	Ba	EBass
618	Pick Open+	Ba	EBass
619	Pick Mute+	Ba	EBass
620	Pick Open-	Ba	EBass
621	Pick Mute-	Ba	EBass
622	Pick Rndwound1 Med	Ba	EBass
623	Pick Rndwound1 Hard	Ba	EBass
624	Pick Rndwound1 Med+	Ba	EBass
625	Pick Rndwound1 Hard+	Ba	EBass
626	Pick Rndwound1 Med-	Ba	EBass
627	Pick Rndwound1 Hard-	Ba	EBass
628	Pick Rndwound2 Open	Ba	EBass
629	Pick Rndwound2 Open+	Ba	EBass
630	Pick Rndwound2 Open-	Ba	EBass
631	Pick Rndwound2 Mute	Ba	EBass
632	Pick Rndwound2 Mute+	Ba	EBass

No.	Name	Main Category	Sub Category
633	Pick Rndwound2 Mute-	Ba	EBass
634	Pick Rndwound2 Dead	Ba	EBass
635	Pick Rndwound2 Harm	Ba	EBass
636	Pick Rndwound2 FX	Ba	EBass
637	Pick Flatwound	Ba	EBass
638	Pick Flatwound+	Ba	EBass
639	Pick Flatwound-	Ba	EBass
640	Finger Med	Ba	EBass
641	Finger Hard	Ba	EBass
642	Finger Harmonics	Ba	EBass
643	Finger Med+	Ba	EBass
644	Finger Hard+	Ba	EBass
645	Finger Med-	Ba	EBass
646	Finger Hard-	Ba	EBass
647	Finger Dead	Ba	EBass
648	Finger Rndwound Sft	Ba	EBass
649	Finger Rndwound Sft+	Ba	EBass
650	Finger Rndwound Sft-	Ba	EBass
651	Finger Rndwound Hrd	Ba	EBass
652	Finger Rndwound Hrd+	Ba	EBass
653	Finger Rndwound Hrd-	Ba	EBass
654	Finger Rndwound Dead	Ba	EBass
655	Finger Rndwound Harm	Ba	EBass
656	Thumb/Pull Hard	Ba	EBass
657	Thumb Hard	Ba	EBass
658	Thumb Harmonics	Ba	EBass
659	Thumb Soft	Ba	EBass
660	Thumb Dead	Ba	EBass
661	Pull Dead	Ba	EBass
662	Fretless	Ba	EBass
663	Fretless Harmonics	Ba	EBass
664	Fretless+	Ba	EBass
665	Fretless-	Ba	EBass
666	Fretless Dead	Ba	EBass
667	Electric Bass FX	Ba	EBass
668	Violin Non-Vib	St	Solo
669	Violin Non-Vib+	St	Solo
670	Violin Non-Vib-	St	Solo
671	Violin Non-Vib Of	St	Solo
672	Violin Non-Vib+ Of	St	Solo
673	Violin Non-Vib- Of	St	Solo
674	Violin St	St	Solo
675	Violin L	St	Solo
676	Violin R	St	Solo
677	Violin St+	St	Solo
678	Violin L+	St	Solo
679	Violin R+	St	Solo
680	Violin St-	St	Solo
681	Violin L-	St	Solo
682	Violin R-	St	Solo
683	Violin St Of	St	Solo
684	Violin L Of	St	Solo
685	Violin R Of	St	Solo
686	Viola St	St	Solo
687	Viola L	St	Solo
688	Viola R	St	Solo
689	Viola St+	St	Solo
690	Viola L+	St	Solo
691	Viola R+	St	Solo
692	Viola St-	St	Solo
693	Viola L-	St	Solo
694	Viola R-	St	Solo
695	Viola St Of	St	Solo
696	Viola L Of	St	Solo
697	Viola R Of	St	Solo
698	Cello St	St	Solo
699	Cello L	St	Solo
700	Cello R	St	Solo
701	Cello St+	St	Solo
702	Cello L+	St	Solo
703	Cello R+	St	Solo
704	Cello St-	St	Solo
705	Cello L-	St	Solo
706	Cello R-	St	Solo
707	Cello St Of	St	Solo
708	Cello L Of	St	Solo
709	Cello R Of	St	Solo
710	Contrabass St	St	Solo
711	Contrabass L	St	Solo

No.	Name	Main Category	Sub Category
712	Contrabass R	St	Solo
713	Contrabass St+	St	Solo
714	Contrabass L+	St	Solo
715	Contrabass R+	St	Solo
716	Contrabass St-	St	Solo
717	Contrabass L-	St	Solo
718	Contrabass R-	St	Solo
719	Contrabass St Of	St	Solo
720	Contrabass L Of	St	Solo
721	Contrabass R Of	St	Solo
722	Solo Combi St	St	Solo
723	Solo Combi L	St	Solo
724	Solo Combi R	St	Solo
725	Solo Combi St+	St	Solo
726	Solo Combi L+	St	Solo
727	Solo Combi R+	St	Solo
728	Solo Combi St-	St	Solo
729	Solo Combi L-	St	Solo
730	Solo Combi R-	St	Solo
731	Solo Combi St Of	St	Solo
732	Solo Combi L Of	St	Solo
733	Solo Combi R Of	St	Solo
734	Solo Combi2 St	St	Solo
735	Solo Combi2 L	St	Solo
736	Solo Combi2 R	St	Solo
737	Solo Combi2 St Of	St	Solo
738	Solo Combi2 L Of	St	Solo
739	Solo Combi2 R Of	St	Solo
740	Solo Combi3 St	St	Solo
741	Solo Combi3 L	St	Solo
742	Solo Combi3 R	St	Solo
743	Solo Combi3 St Of	St	Solo
744	Solo Combi3 L Of	St	Solo
745	Solo Combi3 R Of	St	Solo
746	Solo Spiccato Combi	St	Solo
747	Solo Spiccato Combi+	St	Solo
748	Solo Spiccato Combi-	St	Solo
749	Keman	St	Solo
750	Keman Of	St	Solo
751	Ensemble Mix	St	Ensem
752	Ensemble Mix St	St	Ensem
753	Ensemble Mix L	St	Ensem
754	Ensemble Mix R	St	Ensem
755	Ensemble Mix St Of	St	Ensem
756	Ensemble Mix L Of	St	Ensem
757	Ensemble Mix R Of	St	Ensem
758	Ensemble Mute St	St	Ensem
759	Ensemble Mute	St	Ensem
760	Ensemble Mute-	St	Ensem
761	Ensemble Mute St Of	St	Ensem
762	Ensemble Mute Of	St	Ensem
763	Ensemble Mute - Of	St	Ensem
764	Hard Ensemble St	St	Ensem
765	Hard Ensemble St+	St	Ensem
766	Hard Ensemble St-	St	Ensem
767	Hard Ensemble L	St	Ensem
768	Hard Ensemble L+	St	Ensem
769	Hard Ensemble L-	St	Ensem
770	Hard Ensemble R	St	Ensem
771	Hard Ensemble R+	St	Ensem
772	Hard Ensemble R-	St	Ensem
773	Hard Ensemble St Of	St	Ensem
774	Hard Ensemble L Of	St	Ensem
775	Hard Ensemble R Of	St	Ensem
776	OrchStrgs Soft St	St	Ensem
777	OrchStrgs Soft St+	St	Ensem
778	OrchStrgs Soft St-	St	Ensem
779	OrchStrgs Soft L	St	Ensem
780	OrchStrgs Soft L+	St	Ensem
781	OrchStrgs Soft L-	St	Ensem
782	OrchStrgs Soft R	St	Ensem
783	OrchStrgs Soft R+	St	Ensem
784	OrchStrgs Soft R-	St	Ensem
785	OrchStrgs Soft St Of	St	Ensem
786	OrchStrgs Soft L Of	St	Ensem
787	OrchStrgs Soft R Of	St	Ensem
788	OrchStrgs Med St	St	Ensem
789	OrchStrgs Med St+	St	Ensem
790	OrchStrgs Med St-	St	Ensem

No.	Name	Main Category	Sub Category
791	OrchStrgs Med L	St	Ensem
792	OrchStrgs Med L+	St	Ensem
793	OrchStrgs Med L-	St	Ensem
794	OrchStrgs Med R	St	Ensem
795	OrchStrgs Med R+	St	Ensem
796	OrchStrgs Med R-	St	Ensem
797	OrchStrgs Med St Of	St	Ensem
798	OrchStrgs Med L Of	St	Ensem
799	OrchStrgs Med R Of	St	Ensem
800	OrchStrgs Hard St	St	Ensem
801	OrchStrgs Hard St+	St	Ensem
802	OrchStrgs Hard St-	St	Ensem
803	OrchStrgs Hard L	St	Ensem
804	OrchStrgs Hard L+	St	Ensem
805	OrchStrgs Hard L-	St	Ensem
806	OrchStrgs Hard R	St	Ensem
807	OrchStrgs Hard R+	St	Ensem
808	OrchStrgs Hard R-	St	Ensem
809	OrchStrgs Hard St Of	St	Ensem
810	OrchStrgs Hard L Of	St	Ensem
811	OrchStrgs Hard R Of	St	Ensem
812	Sect Strgs Soft St	St	Ensem
813	Sect Strgs Soft L	St	Ensem
814	Sect Strgs Soft R	St	Ensem
815	Sect Strgs Soft St+	St	Ensem
816	Sect Strgs Soft L+	St	Ensem
817	Sect Strgs Soft R+	St	Ensem
818	Sect Strgs Soft St-	St	Ensem
819	Sect Strgs Soft L-	St	Ensem
820	Sect Strgs Soft R-	St	Ensem
821	Sect Strgs SoftSt Of	St	Ensem
822	Sect Strgs Soft L Of	St	Ensem
823	Sect Strgs Soft R Of	St	Ensem
824	Sect Strgs Med St	St	Ensem
825	Sect Strgs Med L	St	Ensem
826	Sect Strgs Med R	St	Ensem
827	Sect Strgs Med St+	St	Ensem
828	Sect Strgs Med L+	St	Ensem
829	Sect Strgs Med R+	St	Ensem
830	Sect Strgs Med St-	St	Ensem
831	Sect Strgs Med L-	St	Ensem
832	Sect Strgs Med R-	St	Ensem
833	Sect Strgs Med St Of	St	Ensem
834	Sect Strgs Med L Of	St	Ensem
835	Sect Strgs Med R Of	St	Ensem
836	Sect Strgs Hard St	St	Ensem
837	Sect Strgs Hard L	St	Ensem
838	Sect Strgs Hard R	St	Ensem
839	Sect Strgs Hard St+	St	Ensem
840	Sect Strgs Hard L+	St	Ensem
841	Sect Strgs Hard R+	St	Ensem
842	Sect Strgs Hard St-	St	Ensem
843	Sect Strgs Hard L-	St	Ensem
844	Sect Strgs Hard R-	St	Ensem
845	Sect Strgs Hard StOf	St	Ensem
846	Sect Strgs Hard L Of	St	Ensem
847	Sect Strgs Hard R Of	St	Ensem
848	Sect Strgs Gliss St	St	Ensem
849	Sect Strgs Gliss L	St	Ensem
850	Sect Strgs Gliss R	St	Ensem
851	Sect Strgs Gliss St+	St	Ensem
852	Sect Strgs Gliss L+	St	Ensem
853	Sect Strgs Gliss R+	St	Ensem
854	Sect Strgs Gliss St-	St	Ensem
855	Sect Strgs Gliss L-	St	Ensem
856	Sect Strgs Gliss R-	St	Ensem
857	Sect Strgs Spicc St	St	Ensem
858	Sect Strgs Spicc L	St	Ensem
859	Sect Strgs Spicc R	St	Ensem
860	Sect Strgs Spicc St+	St	Ensem
861	Sect Strgs Spicc L+	St	Ensem
862	Sect Strgs Spicc R+	St	Ensem
863	Sect Strgs Spicc St-	St	Ensem
864	Sect Strgs Spicc L-	St	Ensem
865	Sect Strgs Spicc R-	St	Ensem
866	Tremolo Strings St	St	Ensem
867	Tremolo Strings L	St	Ensem
868	Tremolo Strings R	St	Ensem
869	Tremolo Strings St+	St	Ensem

No.	Name	Main Category	Sub Category
870	Tremolo Strings L+	St	Ensem
871	Tremolo Strings R+	St	Ensem
872	Tremolo Strings St-	St	Ensem
873	Tremolo Strings L-	St	Ensem
874	Tremolo Strings R-	St	Ensem
875	Tremolo StringsSt Of	St	Ensem
876	Tremolo Strings L Of	St	Ensem
877	Tremolo Strings R Of	St	Ensem
878	Pizzicato1 St	St	Pizz
879	Pizzicato1 Mono	St	Pizz
880	Pizzicato2	St	Pizz
881	Pop Pizzicato	St	Pizz
882	Large Pizzicato St	St	Pizz
883	Large Pizzicato L	St	Pizz
884	Large Pizzicato R	St	Pizz
885	Large Pizzicato St+	St	Pizz
886	Large Pizzicato L+	St	Pizz
887	Large Pizzicato R+	St	Pizz
888	Large Pizzicato St-	St	Pizz
889	Large Pizzicato L-	St	Pizz
890	Large Pizzicato R-	St	Pizz
891	Live Pizzct Soft St	St	Pizz
892	Live Pizzct Soft L	St	Pizz
893	Live Pizzct Soft R	St	Pizz
894	Live Pizzct Soft St+	St	Pizz
895	Live Pizzct Soft L+	St	Pizz
896	Live Pizzct Soft R+	St	Pizz
897	Live Pizzct Soft St-	St	Pizz
898	Live Pizzct Soft L-	St	Pizz
899	Live Pizzct Soft R-	St	Pizz
900	Live Pizzct Hard St	St	Pizz
901	Live Pizzct Hard L	St	Pizz
902	Live Pizzct Hard R	St	Pizz
903	Live Pizzct Hard St+	St	Pizz
904	Live Pizzct Hard L+	St	Pizz
905	Live Pizzct Hard R+	St	Pizz
906	Live Pizzct Hard St-	St	Pizz
907	Live Pizzct Hard L-	St	Pizz
908	Live Pizzct Hard R-	St	Pizz
909	Orchestral Harp1	St	Pizz
910	Orch Harp2 Soft St	St	Pizz
911	Orch Harp2 Soft L	St	Pizz
912	Orch Harp2 Soft R	St	Pizz
913	Orch Harp2 Soft St+	St	Pizz
914	Orch Harp2 Soft L+	St	Pizz
915	Orch Harp2 Soft R+	St	Pizz
916	Orch Harp2 Soft St-	St	Pizz
917	Orch Harp2 Soft L-	St	Pizz
918	Orch Harp2 Soft R-	St	Pizz
919	Orch Harp2 Med St	St	Pizz
920	Orch Harp2 Med L	St	Pizz
921	Orch Harp2 Med R	St	Pizz
922	Orch Harp2 Med St+	St	Pizz
923	Orch Harp2 Med L+	St	Pizz
924	Orch Harp2 Med R+	St	Pizz
925	Orch Harp2 Med St-	St	Pizz
926	Orch Harp2 Med L-	St	Pizz
927	Orch Harp2 Med R-	St	Pizz
928	Trumpet1 Med	Br	Solo
929	Trumpet1 Hard	Br	Solo
930	Trumpet1 Med Of	Br	Solo
931	Trumpet1 Hard Of	Br	Solo
932	Trumpet2	Br	Solo
933	Trumpet2+	Br	Solo
934	Trumpet2-	Br	Solo
935	Trumpet2 Of	Br	Solo
936	Trumpet Mute	Br	Solo
937	Trumpet Mute Of	Br	Solo
938	Soft Trumpet Soft	Br	Solo
939	Soft Trumpet Soft+	Br	Solo
940	Soft Trumpet Soft-	Br	Solo
941	Soft Trumpet Soft Of	Br	Solo
942	Soft Trumpet Med	Br	Solo
943	Soft Trumpet Med+	Br	Solo
944	Soft Trumpet Med-	Br	Solo
945	Soft Trumpet Med Of	Br	Solo
946	Trumpet Vib Soft	Br	Solo
947	Trumpet Vib Soft+	Br	Solo
948	Trumpet Vib Soft-	Br	Solo

No.	Name	Main Category	Sub Category
949	Trumpet Vib Soft Of	Br	Solo
950	Trumpet Vib Med	Br	Solo
951	Trumpet Vib Med+	Br	Solo
952	Trumpet Vib Med-	Br	Solo
953	Trumpet Vib Med Of	Br	Solo
954	Trumpet Vib Hard	Br	Solo
955	Trumpet Vib Hard+	Br	Solo
956	Trumpet Vib Hard-	Br	Solo
957	Trumpet Vib Hard Of	Br	Solo
958	Trumpet Shake	Br	Solo
959	Trumpet Shake+	Br	Solo
960	Trumpet Shake-	Br	Solo
961	Trumpet Shake Of	Br	Solo
962	Trombone1	Br	Solo
963	Trombone1-	Br	Solo
964	Trombone1 Of	Br	Solo
965	Trombone1- Of	Br	Solo
966	Trombone2	Br	Solo
967	Trombone2 Of	Br	Solo
968	Soft Trombone	Br	Solo
969	Soft Trombone Of	Br	Solo
970	Soft Flugelhorn	Br	Solo
971	Soft Flugelhorn-	Br	Solo
972	Soft Flugelhorn Of	Br	Solo
973	Soft Flugelhorn- Of	Br	Solo
974	Flugelhorn1	Br	Solo
975	Flugelhorn1 Of	Br	Solo
976	Flugelhorn2	Br	Solo
977	Flugelhorn2+	Br	Solo
978	Flugelhorn2-	Br	Solo
979	Flugelhorn2 Of	Br	Solo
980	French Horn Solo	Br	Solo
981	French Horn Solo+	Br	Solo
982	French Horn Solo-	Br	Solo
983	French Horn Solo Of	Br	Solo
984	French Horn Solo+ Of	Br	Solo
985	French Horn Solo- Of	Br	Solo
986	Tuba	Br	Solo
987	Tuba Lp	Br	Solo
988	Brass Sect1 St	Br	Ensem
989	Brass Sect1 St+	Br	Ensem
990	Brass Sect1 St-	Br	Ensem
991	Brass Sect1 L	Br	Ensem
992	Brass Sect1 L+	Br	Ensem
993	Brass Sect1 L-	Br	Ensem
994	Brass Sect1 R	Br	Ensem
995	Brass Sect1 R+	Br	Ensem
996	Brass Sect1 R-	Br	Ensem
997	Brass Sect1 St Of	Br	Ensem
998	Brass Sect1 St+ Of	Br	Ensem
999	Brass Sect1 St- Of	Br	Ensem
1000	Brass Sect1 L Of	Br	Ensem
1001	Brass Sect1 L+ Of	Br	Ensem
1002	Brass Sect1 L- Of	Br	Ensem
1003	Brass Sect1 R Of	Br	Ensem
1004	Brass Sect1 R+ Of	Br	Ensem
1005	Brass Sect1 R- Of	Br	Ensem
1006	Brass Sect Fall	Br	Ensem
1007	Brass Sect2 Soft St	Br	Ensem
1008	Brass Sect2 Soft St+	Br	Ensem
1009	Brass Sect2 Soft St-	Br	Ensem
1010	Brass Sect2 Soft L	Br	Ensem
1011	Brass Sect2 Soft L+	Br	Ensem
1012	Brass Sect2 Soft L-	Br	Ensem
1013	Brass Sect2 Soft R	Br	Ensem
1014	Brass Sect2 Soft R+	Br	Ensem
1015	Brass Sect2 Soft R-	Br	Ensem
1016	Brass Sect2 SoftStOf	Br	Ensem
1017	Brass Sect2 Soft LOf	Br	Ensem
1018	Brass Sect2 Soft ROf	Br	Ensem
1019	Brass Sect2 Med St	Br	Ensem
1020	Brass Sect2 Med St+	Br	Ensem
1021	Brass Sect2 Med St-	Br	Ensem
1022	Brass Sect2 Med L	Br	Ensem
1023	Brass Sect2 Med L+	Br	Ensem
1024	Brass Sect2 Med L-	Br	Ensem
1025	Brass Sect2 Med R	Br	Ensem
1026	Brass Sect2 Med R+	Br	Ensem
1027	Brass Sect2 Med R-	Br	Ensem

No.	Name	Main Category	Sub Category
1028	Brass Sect2 Med StOf	Br	Ensem
1029	Brass Sect2 Med L Of	Br	Ensem
1030	Brass Sect2 Med R Of	Br	Ensem
1031	Brass Sect2 Hard St	Br	Ensem
1032	Brass Sect2 Hard St+	Br	Ensem
1033	Brass Sect2 Hard St-	Br	Ensem
1034	Brass Sect2 Hard L	Br	Ensem
1035	Brass Sect2 Hard L+	Br	Ensem
1036	Brass Sect2 Hard L-	Br	Ensem
1037	Brass Sect2 Hard R	Br	Ensem
1038	Brass Sect2 Hard R+	Br	Ensem
1039	Brass Sect2 Hard R-	Br	Ensem
1040	Brass Sect2 Hrd StOf	Br	Ensem
1041	Brass Sect2 Hrd L Of	Br	Ensem
1042	Brass Sect2 Hrd R Of	Br	Ensem
1043	French Horn Sft St	Br	Ensem
1044	French Horn Sft L	Br	Ensem
1045	French Horn Sft R	Br	Ensem
1046	French Horn Sft St+	Br	Ensem
1047	French Horn Sft L+	Br	Ensem
1048	French Horn Sft R+	Br	Ensem
1049	French Horn Sft St-	Br	Ensem
1050	French Horn Sft L-	Br	Ensem
1051	French Horn Sft R-	Br	Ensem
1052	French Horn Sft StOf	Br	Ensem
1053	French Horn Sft L Of	Br	Ensem
1054	French Horn Sft R Of	Br	Ensem
1055	French Horn SftSt+Of	Br	Ensem
1056	French Horn Sft L+Of	Br	Ensem
1057	French Horn Sft R+Of	Br	Ensem
1058	French Horn SftSt-Of	Br	Ensem
1059	French Horn Sft L-Of	Br	Ensem
1060	French Horn Sft R-Of	Br	Ensem
1061	French Horn Med St	Br	Ensem
1062	French Horn Med L	Br	Ensem
1063	French Horn Med R	Br	Ensem
1064	French Horn Med St+	Br	Ensem
1065	French Horn Med L+	Br	Ensem
1066	French Horn Med R+	Br	Ensem
1067	French Horn Med St-	Br	Ensem
1068	French Horn Med L-	Br	Ensem
1069	French Horn Med R-	Br	Ensem
1070	French Horn Med StOf	Br	Ensem
1071	French Horn Med L Of	Br	Ensem
1072	French Horn Med R Of	Br	Ensem
1073	French Horn MedSt+Of	Br	Ensem
1074	French Horn Med L+Of	Br	Ensem
1075	French Horn Med R+Of	Br	Ensem
1076	French Horn MedSt-Of	Br	Ensem
1077	French Horn Med L-Of	Br	Ensem
1078	French Horn Med R-Of	Br	Ensem
1079	Soprano Sax1	Rd	Sax
1080	Soprano Sax1 Of	Rd	Sax
1081	Soprano Sax2	Rd	Sax
1082	Soprano Sax2 Of	Rd	Sax
1083	Soprano Sax3	Rd	Sax
1084	Soprano Sax3+	Rd	Sax
1085	Soprano Sax3-	Rd	Sax
1086	Soprano Sax3 Of	Rd	Sax
1087	Alto Sax1	Rd	Sax
1088	Alto Sax1 Of	Rd	Sax
1089	Alto Sax2	Rd	Sax
1090	Alto Sax2 Of	Rd	Sax
1091	Alto Sax Vb	Rd	Sax
1092	Alto Sax Vb Of	Rd	Sax
1093	Alto Sax3	Rd	Sax
1094	Alto Sax3+	Rd	Sax
1095	Alto Sax3-	Rd	Sax
1096	Alto Sax3 Of	Rd	Sax
1097	Tenor Sax1	Rd	Sax
1098	Tenor Sax1 Of	Rd	Sax
1099	Tenor Sax2 Soft	Rd	Sax
1100	Tenor Sax2 Soft+	Rd	Sax
1101	Tenor Sax2 Soft-	Rd	Sax
1102	Tenor Sax2 Soft Of	Rd	Sax
1103	Tenor Sax2 Med	Rd	Sax
1104	Tenor Sax2 Med+	Rd	Sax
1105	Tenor Sax2 Med-	Rd	Sax
1106	Tenor Sax2 Med Of	Rd	Sax

No.	Name	Main Category	Sub Category
1107	Tenor Sax2 Hard	Rd	Sax
1108	Tenor Sax2 Hard+	Rd	Sax
1109	Tenor Sax2 Hard-	Rd	Sax
1110	Tenor Sax2 Hard Of	Rd	Sax
1111	Tenor Sax2 Growl	Rd	Sax
1112	Tenor Sax2 Growl+	Rd	Sax
1113	Tenor Sax2 Growl-	Rd	Sax
1114	Tenor Sax2 Growl Of	Rd	Sax
1115	Tenor Sax2 Falls	Rd	Sax
1116	Tenor Sax2 Falls+	Rd	Sax
1117	Tenor Sax2 Falls-	Rd	Sax
1118	Baritone Sax	Rd	Sax
1119	Baritone Sax Of	Rd	Sax
1120	Sax Breath	Rd	Sax
1121	Clarinet Soft St	Rd	Orche
1122	Clarinet Soft St+	Rd	Orche
1123	Clarinet Soft St-	Rd	Orche
1124	Clarinet Soft L	Rd	Orche
1125	Clarinet Soft L+	Rd	Orche
1126	Clarinet Soft L-	Rd	Orche
1127	Clarinet Soft R	Rd	Orche
1128	Clarinet Soft R+	Rd	Orche
1129	Clarinet Soft R-	Rd	Orche
1130	Clarinet Soft St Of	Rd	Orche
1131	Clarinet Soft L Of	Rd	Orche
1132	Clarinet Soft R Of	Rd	Orche
1133	Clarinet Med St	Rd	Orche
1134	Clarinet Med St+	Rd	Orche
1135	Clarinet Med St-	Rd	Orche
1136	Clarinet Med L	Rd	Orche
1137	Clarinet Med L+	Rd	Orche
1138	Clarinet Med L-	Rd	Orche
1139	Clarinet Med R	Rd	Orche
1140	Clarinet Med R+	Rd	Orche
1141	Clarinet Med R-	Rd	Orche
1142	Clarinet Med St Of	Rd	Orche
1143	Clarinet Med L Of	Rd	Orche
1144	Clarinet Med R Of	Rd	Orche
1145	Clarinet Hard St	Rd	Orche
1146	Clarinet Hard St+	Rd	Orche
1147	Clarinet Hard St-	Rd	Orche
1148	Clarinet Hard L	Rd	Orche
1149	Clarinet Hard L+	Rd	Orche
1150	Clarinet Hard L-	Rd	Orche
1151	Clarinet Hard R	Rd	Orche
1152	Clarinet Hard R+	Rd	Orche
1153	Clarinet Hard R-	Rd	Orche
1154	Clarinet Hard St Of	Rd	Orche
1155	Clarinet Hard L Of	Rd	Orche
1156	Clarinet Hard R Of	Rd	Orche
1157	Oboe1	Rd	Orche
1158	Oboe1 Of	Rd	Orche
1159	Oboe2 Med St	Rd	Orche
1160	Oboe2 Med St+	Rd	Orche
1161	Oboe2 Med St-	Rd	Orche
1162	Oboe2 Med L	Rd	Orche
1163	Oboe2 Med L+	Rd	Orche
1164	Oboe2 Med L-	Rd	Orche
1165	Oboe2 Med R	Rd	Orche
1166	Oboe2 Med R+	Rd	Orche
1167	Oboe2 Med R-	Rd	Orche
1168	Oboe2 Med St Of	Rd	Orche
1169	Oboe2 Med L Of	Rd	Orche
1170	Oboe2 Med R Of	Rd	Orche
1171	Oboe2 Hard St	Rd	Orche
1172	Oboe2 Hard St+	Rd	Orche
1173	Oboe2 Hard St-	Rd	Orche
1174	Oboe2 Hard L	Rd	Orche
1175	Oboe2 Hard L+	Rd	Orche
1176	Oboe2 Hard L-	Rd	Orche
1177	Oboe2 Hard R	Rd	Orche
1178	Oboe2 Hard R+	Rd	Orche
1179	Oboe2 Hard R-	Rd	Orche
1180	Oboe2 Hard St Of	Rd	Orche
1181	Oboe2 Hard L Of	Rd	Orche
1182	Oboe2 Hard R Of	Rd	Orche
1183	English Horn	Rd	Orche
1184	English Horn Of	Rd	Orche
1185	Bassoon Med St	Rd	Orche

No.	Name	Main Category	Sub Category
1186	Bassoon Med St+	Rd	Orche
1187	Bassoon Med St-	Rd	Orche
1188	Bassoon Med L	Rd	Orche
1189	Bassoon Med L+	Rd	Orche
1190	Bassoon Med L-	Rd	Orche
1191	Bassoon Med R	Rd	Orche
1192	Bassoon Med R+	Rd	Orche
1193	Bassoon Med R-	Rd	Orche
1194	Bassoon Med St Of	Rd	Orche
1195	Bassoon Med L Of	Rd	Orche
1196	Bassoon Med R Of	Rd	Orche
1197	Bassoon Hard St	Rd	Orche
1198	Bassoon Hard St+	Rd	Orche
1199	Bassoon Hard St-	Rd	Orche
1200	Bassoon Hard L	Rd	Orche
1201	Bassoon Hard L+	Rd	Orche
1202	Bassoon Hard L-	Rd	Orche
1203	Bassoon Hard R	Rd	Orche
1204	Bassoon Hard R+	Rd	Orche
1205	Bassoon Hard R-	Rd	Orche
1206	Bassoon Hard St Of	Rd	Orche
1207	Bassoon Hard L Of	Rd	Orche
1208	Bassoon Hard R Of	Rd	Orche
1209	Bagpipe1	Rd	Other
1210	Bagpipe2	Rd	Other
1211	Harmonica	Rd	Other
1212	Chromatic Harmonica	Rd	Other
1213	Blues Harmonica	Rd	Other
1214	Flute Non-Vib	Pi	Orche
1215	Flute Non-Vib Of	Pi	Orche
1216	Flute1	Pi	Orche
1217	Flute1 Of	Pi	Orche
1218	Flute1 Attack	Pi	Orche
1219	Flute2 Soft St	Pi	Orche
1220	Flute2 Soft St+	Pi	Orche
1221	Flute2 Soft St-	Pi	Orche
1222	Flute2 Soft L	Pi	Orche
1223	Flute2 Soft L+	Pi	Orche
1224	Flute2 Soft L-	Pi	Orche
1225	Flute2 Soft R	Pi	Orche
1226	Flute2 Soft R+	Pi	Orche
1227	Flute2 Soft R-	Pi	Orche
1228	Flute2 Soft St Of	Pi	Orche
1229	Flute2 Soft L Of	Pi	Orche
1230	Flute2 Soft R Of	Pi	Orche
1231	Flute2 Med St	Pi	Orche
1232	Flute2 Med St+	Pi	Orche
1233	Flute2 Med St-	Pi	Orche
1234	Flute2 Med L	Pi	Orche
1235	Flute2 Med L+	Pi	Orche
1236	Flute2 Med L-	Pi	Orche
1237	Flute2 Med R	Pi	Orche
1238	Flute2 Med R+	Pi	Orche
1239	Flute2 Med R-	Pi	Orche
1240	Flute2 Med St Of	Pi	Orche
1241	Flute2 Med L Of	Pi	Orche
1242	Flute2 Med R Of	Pi	Orche
1243	Flute2 Hard St	Pi	Orche
1244	Flute2 Hard St+	Pi	Orche
1245	Flute2 Hard St-	Pi	Orche
1246	Flute2 Hard L	Pi	Orche
1247	Flute2 Hard L+	Pi	Orche
1248	Flute2 Hard L-	Pi	Orche
1249	Flute2 Hard R	Pi	Orche
1250	Flute2 Hard R+	Pi	Orche
1251	Flute2 Hard R-	Pi	Orche
1252	Flute2 Hard St Of	Pi	Orche
1253	Flute2 Hard L Of	Pi	Orche
1254	Flute2 Hard R Of	Pi	Orche
1255	Piccolo1	Pi	Orche
1256	Piccolo1 Of	Pi	Orche
1257	Piccolo2 St	Pi	Orche
1258	Piccolo2 L	Pi	Orche
1259	Piccolo2 R	Pi	Orche
1260	Piccolo2 St+	Pi	Orche
1261	Piccolo2 L+	Pi	Orche
1262	Piccolo2 R+	Pi	Orche
1263	Piccolo2 St-	Pi	Orche
1264	Piccolo2 L-	Pi	Orche

No.	Name	Main Category	Sub Category
1265	Piccolo2 R-	Pi	Orche
1266	Piccolo2 St Of	Pi	Orche
1267	Piccolo2 L Of	Pi	Orche
1268	Piccolo2 R Of	Pi	Orche
1269	Breath One Shot	Pi	Orche
1270	Pan Flute	Pi	Other
1271	Pan Flute-	Pi	Other
1272	Irish Pipe	Pi	Other
1273	Irish Pipe Of	Pi	Other
1274	Shakuhachi	Pi	Other
1275	Shakuhachi Of	Pi	Other
1276	Recorder	Pi	Other
1277	Recorder Of	Pi	Other
1278	Bottle	Pi	Other
1279	Ocarina	Pi	Other
1280	Ocarina Of	Pi	Other
1281	Human Whistle	Pi	Other
1282	Didgeridoo 1	Pi	Other
1283	Didgeridoo 2	Pi	Other
1284	Didgeridoo 3	Pi	Other
1285	Didgeridoo Combi1	Pi	Other
1286	Didgeridoo Combi2	Pi	Other
1287	Sho	Pi	Other
1288	Shanai	Pi	Other
1289	Shanai Of	Pi	Other
1290	Ney	Pi	Other
1291	Ney Of	Pi	Other
1292	Kaval	Pi	Other
1293	Kaval Of	Pi	Other
1294	Hah Choir St	Vo	Voice
1295	Hah Choir L	Vo	Voice
1296	Hah Choir R	Vo	Voice
1297	Ooh Choir St	Vo	Voice
1298	Ooh Choir L	Vo	Voice
1299	Ooh Choir R	Vo	Voice
1300	Ooh St	Vo	Voice
1301	Ooh L	Vo	Voice
1302	Ooh R	Vo	Voice
1303	Ooh St Of	Vo	Voice
1304	Ooh L Of	Vo	Voice
1305	Ooh R Of	Vo	Voice
1306	Cho Breath L	Vo	Voice
1307	Cho Breath R	Vo	Voice
1308	SynVox	Vo	Voice
1309	VoxNoiz	Vo	Voice
1310	Itopia	Vo	Voice
1311	Granu Vox	Vo	Voice
1312	Day	Vo	Voice
1313	So Long	Vo	Voice
1314	Vocal Osc	Vo	Voice
1315	PWM Strings St	Wv	Pad
1316	PWM Strings Mn	Wv	Pad
1317	Long Saw	Wv	Pad
1318	Fat Saw St	Wv	Pad
1319	Fat Saw Mn	Wv	Pad
1320	Fat Saw Mn-	Wv	Pad
1321	OB Mod Saw	Wv	Pad
1322	VP Strings St	Wv	Pad
1323	VP Strings L	Wv	Pad
1324	VP Strings R	Wv	Pad
1325	OB Strings	Wv	Pad
1326	Syzzle Strings	Wv	Pad
1327	Padd	Wv	Pad
1328	Dark Light	Wv	Pad
1329	OB Brass	Wv	Pad
1330	Trance St	Wv	Pad
1331	Trance Mn	Wv	Pad
1332	PWM Fast	Wv	Pad
1333	PWM Slow	Wv	Pad
1334	CS80 Brass	Wv	Pad
1335	Airy Sine	Wv	Pad
1336	String Machine	Wv	Pad
1337	String Machine+	Wv	Pad
1338	String Machine-	Wv	Pad
1339	Med Detuned Pad St	Wv	Pad
1340	Med Detuned Pad L	Wv	Pad
1341	Med Detuned Pad R	Wv	Pad
1342	StrongDetuned Pad St	Wv	Pad
1343	StrongDetuned Pad L	Wv	Pad

No.	Name	Main Category	Sub Category
1344	StrongDetuned Pad R	Wv	Pad
1345	Med Detuned 3osc	Wv	Pad
1346	XP Brass	Wv	Pad
1347	XP Brass Lp	Wv	Pad
1348	String Pad St	Wv	Pad
1349	String Pad L	Wv	Pad
1350	String Pad R	Wv	Pad
1351	OB Brassy Pad St	Wv	Pad
1352	OB Brassy Pad L	Wv	Pad
1353	OB Brassy Pad R	Wv	Pad
1354	Fat PWM St	Wv	Pad
1355	Fat PWM L	Wv	Pad
1356	Fat PWM R	Wv	Pad
1357	Soft Ensemble St	Wv	Pad
1358	Soft Ensemble L	Wv	Pad
1359	Soft Ensemble R	Wv	Pad
1360	Sync Lead1	Wv	Analg
1361	Sync Lead2	Wv	Analg
1362	Sync Lead3	Wv	Analg
1363	Sync Lead4	Wv	Analg
1364	Sync Lead5	Wv	Analg
1365	Sync LFO	Wv	Analg
1366	P5 SawDown 0 dg	Wv	Analg
1367	P5 SawDown 180 dg	Wv	Analg
1368	P5 SawDown PhaseRndm	Wv	Analg
1369	P5 SawUp 0 dg	Wv	Analg
1370	P5 SawUp 90 dg	Wv	Analg
1371	P5 SawUp 180 dg	Wv	Analg
1372	P5 SawUp 270 dg	Wv	Analg
1373	OB Saw	Wv	Analg
1374	Saw	Wv	Analg
1375	1o1 Saw	Wv	Analg
1376	1o1 Sub	Wv	Analg
1377	Saw Square	Wv	Analg
1378	Square Saw	Wv	Analg
1379	Mg Ramp	Wv	Analg
1380	P10-1	Wv	Analg
1381	P10-2	Wv	Analg
1382	P10-3	Wv	Analg
1383	P25-1	Wv	Analg
1384	P25-2	Wv	Analg
1385	P50-1	Wv	Analg
1386	P50-2	Wv	Analg
1387	Tri Wave	Wv	Analg
1388	Sine	Wv	Analg
1389	Heterodyning	Wv	Analg
1390	Ring Mod	Wv	Digi
1391	FM Square	Wv	Digi
1392	FM Shaper	Wv	Digi
1393	FM Metal1	Wv	Digi
1394	FM Metal2	Wv	Digi
1395	FM Organ1	Wv	Digi
1396	FM Organ2	Wv	Digi
1397	FM Organ3	Wv	Digi
1398	FM Organ4	Wv	Digi
1399	FM Tubular Bass	Wv	Digi
1400	FM Funk	Wv	Digi
1401	FM Guitar	Wv	Digi
1402	FS Buzz	Wv	Digi
1403	Wet Pluck	Wv	Digi
1404	Digi 01	Wv	Digi
1405	Digi 02	Wv	Digi
1406	Digi 03	Wv	Digi
1407	Digi 04	Wv	Digi
1408	Digi 05	Wv	Digi
1409	Digi 06	Wv	Digi
1410	Digi 07	Wv	Digi
1411	Digi 08	Wv	Digi
1412	Digi 09	Wv	Digi
1413	Digi 10	Wv	Digi
1414	Digi 11	Wv	Digi
1415	Digi 12	Wv	Digi
1416	Bell1 Wave	Wv	Digi
1417	Bell2 Wave	Wv	Digi
1418	DigiVox1	Wv	Digi
1419	DigiVox2	Wv	Digi
1420	DigiVox3	Wv	Digi
1421	DigiVox4	Wv	Digi
1422	DigiVox5	Wv	Digi

No.	Name	Main Category	Sub Category
1423	Vox G2	Wv	Digi
1424	Vox E3	Wv	Digi
1425	DigiOsc1	Wv	Digi
1426	DigiOsc2	Wv	Digi
1427	DigiOsc3	Wv	Digi
1428	DigiOsc4	Wv	Digi
1429	DigiOsc5	Wv	Digi
1430	DigiOsc6	Wv	Digi
1431	DigiOsc7	Wv	Digi
1432	EP Wave 1	Wv	Digi
1433	EP Wave 2	Wv	Digi
1434	EP Wave 3	Wv	Digi
1435	EP Wave 4	Wv	Digi
1436	EP Wave 5	Wv	Digi
1437	EP Wave 6	Wv	Digi
1438	Organ Wave1	Wv	Digi
1439	Organ Wave2	Wv	Digi
1440	Organ Wave3	Wv	Digi
1441	DigiBell1	Wv	Digi
1442	DigiBell2	Wv	Digi
1443	DigiBell3	Wv	Digi
1444	DigiBell4	Wv	Digi
1445	DigiBell5	Wv	Digi
1446	DigiBell6	Wv	Digi
1447	DigiBell7	Wv	Digi
1448	Spectrum1	Wv	Digi
1449	Spectrum2	Wv	Digi
1450	Spectrum3	Wv	Digi
1451	3o3 Saw	Wv	Bass
1452	3o3 Saw2	Wv	Bass
1453	3o3 Square	Wv	Bass
1454	Mini Bass1	Wv	Bass
1455	Mini Bass1 Of	Wv	Bass
1456	Mini Bass2	Wv	Bass
1457	Mini Bass2 Of	Wv	Bass
1458	Mini Bass3a	Wv	Bass
1459	Mini Bass3b	Wv	Bass
1460	Mini Bass3c	Wv	Bass
1461	Q Synbass	Wv	Bass
1462	Q Synbass Of	Wv	Bass
1463	Punch	Wv	Bass
1464	Punch Of	Wv	Bass
1465	Synth Bass1	Wv	Bass
1466	Synth Bass2	Wv	Bass
1467	Blip Bass	Wv	Bass
1468	Blip Bass Of	Wv	Bass
1469	Klick Bass	Wv	Bass
1470	Klick Bass Of	Wv	Bass
1471	Puls Bass	Wv	Bass
1472	Puls Bass Of	Wv	Bass
1473	Dirty Perc	Wv	Bass
1474	Short Uni	Wv	Bass
1475	Short Uni Of	Wv	Bass
1476	Noise Bass	Wv	Bass
1477	Noise Bass Of	Wv	Bass
1478	Mg Bass1	Wv	Bass
1479	Mg Bass1 Of	Wv	Bass
1480	Mg Bass2	Wv	Bass
1481	Mg Bass2 Of	Wv	Bass
1482	Mg Bass3	Wv	Bass
1483	Mg Bass3 Of	Wv	Bass
1484	Mod Bass	Wv	Bass
1485	Analog Bass1	Wv	Bass
1486	Analog Bass1 Of	Wv	Bass
1487	Analog Bass2	Wv	Bass
1488	Analog Bass2 Of	Wv	Bass
1489	Analog Bass3	Wv	Bass
1490	Analog Bass4	Wv	Bass
1491	Analog Bass4 Of	Wv	Bass
1492	Analog Bass5	Wv	Bass
1493	Analog Bass5 Of	Wv	Bass
1494	Analog Bass6	Wv	Bass
1495	Analog Bass6 Of	Wv	Bass
1496	UniBass	Wv	Bass
1497	UniBass Of	Wv	Bass
1498	T8 Kick Bass	Wv	Bass
1499	T8 Kick Bass Of	Wv	Bass
1500	FM Bass1	Wv	Bass
1501	FM Bass2	Wv	Bass

No.	Name	Main Category	Sub Category
1502	FM Bass3	Wv	Bass
1503	FM Bass4	Wv	Bass
1504	FM Bass5	Wv	Bass
1505	FM Bass6	Wv	Bass
1506	Lately-S	Wv	Bass
1507	Lately-L	Wv	Bass
1508	Seq Bass	Wv	Bass
1509	JP Short Seq St	Wv	Bass
1510	JP Short Seq L	Wv	Bass
1511	JP Short Seq R	Wv	Bass
1512	Sharp Perc St	Wv	Bass
1513	Sharp Perc L	Wv	Bass
1514	Sharp Perc R	Wv	Bass
1515	Short Stepper St	Wv	Bass
1516	Short Stepper L	Wv	Bass
1517	Short Stepper R	Wv	Bass
1518	Mini Blip1	Wv	Other
1519	Mini Blip2	Wv	Other
1520	Mini Blip3	Wv	Other
1521	Mini Blip4	Wv	Other
1522	Mini Blip5	Wv	Other
1523	Mini Blip6	Wv	Other
1524	Noise	Wv	Other
1525	Saturation	Wv	Other
1526	Birch St	Me	Ambie
1527	Birch L	Me	Ambie
1528	Birch R	Me	Ambie
1529	Willow St	Me	Ambie
1530	Willow L	Me	Ambie
1531	Willow R	Me	Ambie
1532	Anemone St	Me	Ambie
1533	Anemone L	Me	Ambie
1534	Anemone R	Me	Ambie
1535	Magnitude St	Me	Ambie
1536	Magnitude L	Me	Ambie
1537	Magnitude R	Me	Ambie
1538	SabreTone	Me	Ambie
1539	Vox Bell	Me	Ambie
1540	Mellow	Me	Ambie
1541	BellAir	Me	Ambie
1542	BigSyn	Me	Ambie
1543	Trance Choir	Me	Ambie
1544	Eery	Me	Ambie
1545	VoxAlk	Me	Ambie
1546	Hi-Lo	Me	Ambie
1547	AirHose St	Me	Ambie
1548	AirHose L	Me	Ambie
1549	AirHose R	Me	Ambie
1550	Space Scream	Me	Ambie
1551	Ooh Feedback	Me	Ambie
1552	Fairwave	Me	Ambie
1553	Mind Bell	Me	Ambie
1554	Sonar1	Me	Ambie
1555	Sonar2	Me	Ambie
1556	Digi Breath	Me	Ambie
1557	Engine Room St	Me	Ambie
1558	Engine Room L	Me	Ambie
1559	Engine Room R	Me	Ambie
1560	Moving Chime St	Me	Ambie
1561	Moving Chime L	Me	Ambie
1562	Moving Chime R	Me	Ambie
1563	Motion Beam	Me	Ambie
1564	Bell Spectrum St	Me	Ambie
1565	Bell Spectrum L	Me	Ambie
1566	Bell Spectrum R	Me	Ambie
1567	Hybrid Pad St	Me	Ambie
1568	Hybrid Pad L	Me	Ambie
1569	Hybrid Pad R	Me	Ambie
1570	Wavedance St	Me	Ambie
1571	Wavedance L	Me	Ambie
1572	Wavedance R	Me	Ambie
1573	Leftpitch St	Me	Ambie
1574	Leftpitch L	Me	Ambie
1575	Leftpitch R	Me	Ambie
1576	Pitchomat St	Me	Ambie
1577	Pitchomat L	Me	Ambie
1578	Pitchomat R	Me	Ambie
1579	Reflecting St	Me	Ambie
1580	Reflecting L	Me	Ambie

No.	Name	Main Category	Sub Category
1581	Reflecting R	Me	Ambie
1582	Spectrals St	Me	Ambie
1583	Spectrals L	Me	Ambie
1584	Spectrals R	Me	Ambie
1585	The Fog St	Me	Ambie
1586	The Fog L	Me	Ambie
1587	The Fog R	Me	Ambie
1588	Orchestra Hit1 St	Me	Hit
1589	Orchestra Hit1 L	Me	Hit
1590	Orchestra Hit1 R	Me	Hit
1591	Orchestra Hit2 St	Me	Hit
1592	Orchestra Hit2 L	Me	Hit
1593	Orchestra Hit2 R	Me	Hit
1594	Orchestra Hit3	Me	Hit
1595	StabOrgan1	Me	Hit
1596	HH Hit	Me	Hit
1597	Hit Orchestra1	Me	Hit
1598	Hit Brass	Me	Hit
1599	Stab Orchestra	Me	Hit
1600	Stab Giant	Me	Hit
1601	Stab Hard	Me	Hit
1602	Stab Organ2	Me	Hit
1603	Stab Aah	Me	Hit
1604	Hit Uhh	Me	Hit
1605	Hit Orchestra2	Me	Hit
1606	Vox Drum	Me	Hit
1607	FX Chime	Me	EFX
1608	Bubble	Me	EFX
1609	Lektronica	Me	EFX
1610	Loop145	Me	EFX
1611	X-Fade	Me	EFX
1612	Resonance X-Fade	Me	EFX
1613	Quiek	Me	EFX
1614	Hop FX1	Me	EFX
1615	Hop FX2	Me	EFX
1616	Neo Seq Em All	Me	EFX
1617	Neo Seq Em-1	Me	EFX
1618	Neo Seq Em-2	Me	EFX
1619	Neo Seq Em-3	Me	EFX
1620	Neo Seq Em-4	Me	EFX
1621	Neo Seq Em-5	Me	EFX
1622	Neo Seq Em-6	Me	EFX
1623	Neo Seq Em-7	Me	EFX
1624	Neo Seq Em-8	Me	EFX
1625	Whisper Seq Bb	Me	EFX
1626	Whisper Seq Bb Of	Me	EFX
1627	Woody Seq St	Me	EFX
1628	Woody Seq L	Me	EFX
1629	Woody Seq R	Me	EFX
1630	Neo Seq2 Em All	Me	EFX
1631	Neo Seq2 Em-1	Me	EFX
1632	Neo Seq2 Em-2	Me	EFX
1633	Neo Seq2 Em-3	Me	EFX
1634	Neo Seq2 Em-4	Me	EFX
1635	Neo Seq2 Em-5	Me	EFX
1636	Neo Seq2 Em-6	Me	EFX
1637	Neo Seq2 Em-7	Me	EFX
1638	Neo Seq2 Em-8	Me	EFX
1639	Portamento Lead Seq	Me	EFX
1640	Aero Seq All	Me	EFX
1641	Aero Seq-1	Me	EFX
1642	Aero Seq-2	Me	EFX
1643	Aero Seq-3	Me	EFX
1644	Aero Seq-4	Me	EFX
1645	Aero Seq-5	Me	EFX
1646	Aero Seq-6	Me	EFX
1647	Aero Seq-7	Me	EFX
1648	Aero Seq-8	Me	EFX
1649	Aero Seq-9	Me	EFX
1650	Aero Seq-10	Me	EFX
1651	Aero Seq-11	Me	EFX
1652	Aero Seq-12	Me	EFX
1653	Aero Seq-13	Me	EFX
1654	Aero Seq-14	Me	EFX
1655	Aero Seq-15	Me	EFX
1656	Aero Seq-16	Me	EFX
1657	Electer	Me	Other
1658	MultiPiano	Me	Other
1659	Radio Noise	Me	Other

No.	Name	Main Category	Sub Category
1660	LFO Seq	Me	Other
1661	Raspberry	Me	Other
1662	DigiHeli	Me	Other
1663	Computer St	Me	Other
1664	Computer L	Me	Other
1665	Computer R	Me	Other
1666	Chatter	Me	Other
1667	Fx Cymbals St	Me	Other
1668	Fx Cymbals L	Me	Other
1669	Fx Cymbals R	Me	Other
1670	Warning Mod	Me	Other
1671	VocalRes	Me	Other
1672	Hoo	Me	Other
1673	Bell Choir	Me	Other
1674	Bell Choir Lp	Me	Other
1675	VibeNP	Me	Other
1676	Shower St	Se	SE
1677	Shower L	Se	SE
1678	Shower R	Se	SE
1679	Fx Female Voice St	Se	SE
1680	Fx Female Voice L	Se	SE
1681	Fx Female Voice R	Se	SE
1682	Grain1	Se	SE
1683	Grain2 St	Se	SE
1684	Grain2 L	Se	SE
1685	Grain2 R	Se	SE
1686	Grain3 St	Se	SE
1687	Grain3 L	Se	SE
1688	Grain3 R	Se	SE
1689	Moving Harp St	Se	SE
1690	Moving Harp L	Se	SE
1691	Moving Harp R	Se	SE
1692	Metal Mod	Se	SE
1693	Digital Wind	Se	SE
1694	Digi Voice Mod	Se	SE
1695	Ethnic Rhythm Rv All	Se	SE
1696	Ethnic Rhythm Rv-1	Se	SE
1697	Ethnic Rhythm Rv-2	Se	SE
1698	Ethnic Rhythm Rv-3	Se	SE
1699	Ethnic Rhythm Rv-4	Se	SE
1700	Ethnic Rhythm Rv-5	Se	SE
1701	Ethnic Rhythm Rv-6	Se	SE
1702	Ethnic Rhythm Rv-7	Se	SE
1703	Ripper	Se	SE
1704	Glass	Se	SE
1705	Bell FX1	Se	SE
1706	Bell FX2	Se	SE
1707	IndusTom	Se	SE
1708	Noise Burst	Se	SE
1709	Zap1	Se	SE
1710	Zap2	Se	SE
1711	Electric Perc1	Se	SE
1712	Electric Perc2	Se	SE
1713	Electric Perc3	Se	SE
1714	Electric Perc4	Se	SE
1715	Electric Perc5	Se	SE
1716	Electric Perc6	Se	SE
1717	Electric Perc7	Se	SE
1718	Electric Perc8	Se	SE
1719	Electric Perc9	Se	SE
1720	Electric Perc10	Se	SE
1721	Electric Perc11	Se	SE
1722	Electric Perc12	Se	SE
1723	Electric Perc13	Se	SE
1724	Electric Perc14	Se	SE
1725	Electric Perc15	Se	SE
1726	Hi Q1	Se	SE
1727	Hi Q2	Se	SE
1728	Vox Hit Rev	Se	SE
1729	Bomb	Se	SE
1730	Tape Rewind	Se	SE
1731	FxGun1	Se	SE
1732	FxGun2	Se	SE
1733	Thunder	Se	SE
1734	Swarm	Se	SE
1735	TurnTable	Se	SE
1736	Police	Se	SE
1737	Door Squeak	Se	SE
1738	Heart Beat	Se	SE

No.	Name	Main Category	Sub Category
1739	Helicopter	Se	SE
1740	Seashore	Se	SE
1741	Telephone	Se	SE
1742	TelRing	Se	SE
1743	Bird	Se	SE
1744	Stream	Se	SE
1745	Gunshot	Se	SE
1746	Applause	Se	SE
1747	RainLoop	Se	SE
1748	Scratch H	Se	Scrtc
1749	Scratch L	Se	Scrtc
1750	Scratch Down	Se	Scrtc
1751	Scratch Hi F	Se	Scrtc
1752	Scratch Hi R	Se	Scrtc
1753	Scratch Lo F	Se	Scrtc
1754	Scratch Lo R	Se	Scrtc
1755	Scratch Bd F	Se	Scrtc
1756	Scratch Bd R	Se	Scrtc
1757	Scratch Sd F	Se	Scrtc
1758	Scratch Sd R	Se	Scrtc
1759	Scratch Vo F	Se	Scrtc
1760	Scratch Vo R	Se	Scrtc
1761	Scratch Stop	Se	Scrtc
1762	Scratch Spin	Se	Scrtc
1763	Scratch Hip	Se	Scrtc
1764	Scratch Hip2	Se	Scrtc
1765	Scratch Attack	Se	Scrtc
1766	Scratch R&B	Se	Scrtc
1767	Scratch Combi	Se	Scrtc
1768	Scratch Combi2	Se	Scrtc
1769	Scratch Combi3	Se	Scrtc
1770	Scratch Combi4	Se	Scrtc
1771	AcousticGtr FX01 St	Se	MgFX
1772	AcousticGtr FX01 L	Se	MgFX
1773	AcousticGtr FX01 R	Se	MgFX
1774	AcousticGtr FX02 St	Se	MgFX
1775	AcousticGtr FX02 L	Se	MgFX
1776	AcousticGtr FX02 R	Se	MgFX
1777	AcousticGtr FX03 St	Se	MgFX
1778	AcousticGtr FX03 L	Se	MgFX
1779	AcousticGtr FX03 R	Se	MgFX
1780	AcousticGtr FX04 St	Se	MgFX
1781	AcousticGtr FX04 L	Se	MgFX
1782	AcousticGtr FX04 R	Se	MgFX
1783	AcousticGtr FX05 St	Se	MgFX
1784	AcousticGtr FX05 L	Se	MgFX
1785	AcousticGtr FX05 R	Se	MgFX
1786	AcousticGtr FX06 St	Se	MgFX
1787	AcousticGtr FX06 L	Se	MgFX
1788	AcousticGtr FX06 R	Se	MgFX
1789	AcousticGtr FX07 St	Se	MgFX
1790	AcousticGtr FX07 L	Se	MgFX
1791	AcousticGtr FX07 R	Se	MgFX
1792	AcousticGtr FX08 St	Se	MgFX
1793	AcousticGtr FX08 L	Se	MgFX
1794	AcousticGtr FX08 R	Se	MgFX
1795	AcousticGtr FX09 St	Se	MgFX
1796	AcousticGtr FX09 L	Se	MgFX
1797	AcousticGtr FX09 R	Se	MgFX
1798	AcousticGtr FX10 St	Se	MgFX
1799	AcousticGtr FX10 L	Se	MgFX
1800	AcousticGtr FX10 R	Se	MgFX
1801	AcousticGtr FX11 St	Se	MgFX
1802	AcousticGtr FX11 L	Se	MgFX
1803	AcousticGtr FX11 R	Se	MgFX
1804	AcousticGtr FX12 St	Se	MgFX
1805	AcousticGtr FX12 L	Se	MgFX
1806	AcousticGtr FX12 R	Se	MgFX
1807	AcousticGtr FX13 St	Se	MgFX
1808	AcousticGtr FX13 L	Se	MgFX
1809	AcousticGtr FX13 R	Se	MgFX
1810	AcousticGtr FX14 St	Se	MgFX
1811	AcousticGtr FX14 L	Se	MgFX
1812	AcousticGtr FX14 R	Se	MgFX
1813	AcousticGtr FX15 St	Se	MgFX
1814	AcousticGtr FX15 L	Se	MgFX
1815	AcousticGtr FX15 R	Se	MgFX
1816	AcousticGtr FX16 St	Se	MgFX
1817	AcousticGtr FX16 L	Se	MgFX

No.	Name	Main Category	Sub Category
1818	AcousticGtr FX16 R	Se	MgFX
1819	AcousticGtr FX17 St	Se	MgFX
1820	AcousticGtr FX17 L	Se	MgFX
1821	AcousticGtr FX17 R	Se	MgFX
1822	AcousticGtr FX18 St	Se	MgFX
1823	AcousticGtr FX18 L	Se	MgFX
1824	AcousticGtr FX18 R	Se	MgFX
1825	AcousticGtr FX19 St	Se	MgFX
1826	AcousticGtr FX19 L	Se	MgFX
1827	AcousticGtr FX19 R	Se	MgFX
1828	AcousticGtr FX20 St	Se	MgFX
1829	AcousticGtr FX20 L	Se	MgFX
1830	AcousticGtr FX20 R	Se	MgFX
1831	AcousticGtr FX21 St	Se	MgFX
1832	AcousticGtr FX21 L	Se	MgFX
1833	AcousticGtr FX21 R	Se	MgFX
1834	AcousticGtr FX22 St	Se	MgFX
1835	AcousticGtr FX22 L	Se	MgFX
1836	AcousticGtr FX22 R	Se	MgFX
1837	AcousticGtr FX23 St	Se	MgFX
1838	AcousticGtr FX23 L	Se	MgFX
1839	AcousticGtr FX23 R	Se	MgFX
1840	AcousticGtr FX24 St	Se	MgFX
1841	AcousticGtr FX24 L	Se	MgFX
1842	AcousticGtr FX24 R	Se	MgFX
1843	AcousticGtr FX25 St	Se	MgFX
1844	AcousticGtr FX25 L	Se	MgFX
1845	AcousticGtr FX25 R	Se	MgFX
1846	AcousticGtr FX26 St	Se	MgFX
1847	AcousticGtr FX26 L	Se	MgFX
1848	AcousticGtr FX26 R	Se	MgFX
1849	AcousticGtr FX27 St	Se	MgFX
1850	AcousticGtr FX27 L	Se	MgFX
1851	AcousticGtr FX27 R	Se	MgFX
1852	AcousticGtr FX28 St	Se	MgFX
1853	AcousticGtr FX28 L	Se	MgFX
1854	AcousticGtr FX28 R	Se	MgFX
1855	AcousticGtr FX29 St	Se	MgFX
1856	AcousticGtr FX29 L	Se	MgFX
1857	AcousticGtr FX29 R	Se	MgFX
1858	AcousticGtr FX30 St	Se	MgFX
1859	AcousticGtr FX30 L	Se	MgFX
1860	AcousticGtr FX30 R	Se	MgFX
1861	ElectricGtr FX01	Se	MgFX
1862	ElectricGtr FX02	Se	MgFX
1863	ElectricGtr FX03	Se	MgFX
1864	ElectricGtr FX04	Se	MgFX
1865	ElectricGtr FX05	Se	MgFX
1866	ElectricGtr FX06	Se	MgFX
1867	ElectricGtr FX07	Se	MgFX
1868	ElectricGtr FX08	Se	MgFX
1869	ElectricGtr FX09	Se	MgFX
1870	ElectricGtr FX10	Se	MgFX
1871	ElectricGtr FX11	Se	MgFX
1872	ElectricGtr FX12	Se	MgFX
1873	ElectricGtr FX13	Se	MgFX
1874	ElectricGtr FX14	Se	MgFX
1875	ElectricGtr FX15	Se	MgFX
1876	ElectricGtr FX16	Se	MgFX
1877	ElectricGtr FX17	Se	MgFX
1878	ElectricGtr FX18	Se	MgFX
1879	ElectricGtr FX19	Se	MgFX
1880	ElectricGtr FX20	Se	MgFX
1881	ElectricGtr FX21	Se	MgFX
1882	ElectricGtr FX22	Se	MgFX
1883	ElectricGtr FX23	Se	MgFX
1884	Acoustic Bass FX01	Se	MgFX
1885	Acoustic Bass FX02	Se	MgFX
1886	Acoustic Bass FX03	Se	MgFX
1887	Acoustic Bass FX04	Se	MgFX
1888	Acoustic Bass FX05	Se	MgFX
1889	Acoustic Bass FX06	Se	MgFX
1890	Acoustic Bass FX07	Se	MgFX
1891	Acoustic Bass FX08	Se	MgFX
1892	Acoustic Bass FX09	Se	MgFX
1893	Electric Bass FX 01	Se	MgFX
1894	Electric Bass FX 02	Se	MgFX
1895	Electric Bass FX 03	Se	MgFX
1896	Electric Bass FX 04	Se	MgFX

No.	Name	Main Category	Sub Category
1897	Electric Bass FX 05	Se	MgFX
1898	Electric Bass FX 06	Se	MgFX
1899	Electric Bass FX 07	Se	MgFX
1900	Electric Bass FX 08	Se	MgFX
1901	Electric Bass FX 09	Se	MgFX
1902	Electric Bass FX 10	Se	MgFX
1903	Electric Bass FX 11	Se	MgFX
1904	Electric Bass FX 12	Se	MgFX
1905	Electric Bass FX 13	Se	MgFX
1906	Electric Bass FX 14	Se	MgFX
1907	Electric Bass FX 15	Se	MgFX
1908	Electric Bass FX 16	Se	MgFX
1909	Electric Bass FX 17	Se	MgFX
1910	Electric Bass FX 18	Se	MgFX
1911	Electric Bass FX 19	Se	MgFX
1912	Electric Bass FX 20	Se	MgFX
1913	Electric Bass FX 21	Se	MgFX
1914	Electric Bass FX 22	Se	MgFX
1915	Electric Bass FX 23	Se	MgFX
1916	ShakerA 1/3	Pc	Pop
1917	ShakerA 1	Pc	Pop
1918	ShakerA 2	Pc	Pop
1919	ShakerA 3	Pc	Pop
1920	ShakerB Sw	Pc	Pop
1921	ShakerB Shake	Pc	Pop
1922	ShakerB Hit	Pc	Pop
1923	Shaker Hip1	Pc	Pop
1924	Shaker Hip2	Pc	Pop
1925	Shaker Hip3	Pc	Pop
1926	Shaker Hip4	Pc	Pop
1927	Tambourine1 Sw	Pc	Pop
1928	Tambourine1 Shake	Pc	Pop
1929	Tambourine1 Hit	Pc	Pop
1930	Tambourine2 Sw	Pc	Pop
1931	Tambourine2 Shake	Pc	Pop
1932	Tambourine2 Hit	Pc	Pop
1933	Stick1	Pc	Pop
1934	Stick2	Pc	Pop
1935	Castanet1	Pc	Pop
1936	Castanet2 Sw	Pc	Pop
1937	Castanet2 Soft	Pc	Pop
1938	Castanet2 Hard	Pc	Pop
1939	Wood Block	Pc	Pop
1940	Vibraslap1	Pc	Pop
1941	Vibraslap2	Pc	Pop
1942	Triangle Sw	Pc	Pop
1943	Triangle Open	Pc	Pop
1944	Triangle Mute	Pc	Pop
1945	Hand Clap1 St	Pc	Pop
1946	Hand Clap1 L	Pc	Pop
1947	Hand Clap1 R	Pc	Pop
1948	Hand Clap2 Sw	Pc	Pop
1949	Hand Clap2 Close	Pc	Pop
1950	Hand Clap2 Open	Pc	Pop
1951	Finger Snap	Pc	Pop
1952	Handbell L	Pc	Pop
1953	Handbell H	Pc	Pop
1954	Sleigh Bell1	Pc	Pop
1955	Sleigh Bell2	Pc	Pop
1956	Ghunghuru	Pc	Pop
1957	Wind Chime	Pc	Pop
1958	Resin Block Small	Pc	Pop
1959	Resin Block Large	Pc	Pop
1960	OrchTamb Shake-Hit	Pc	Pop
1961	OrchTamb Shake 1-2	Pc	Pop
1962	OrchTamb Shake 1	Pc	Pop
1963	OrchTamb Shake 2	Pc	Pop
1964	OrchTamb Hit Close	Pc	Pop
1965	OrchTamb Hit Open	Pc	Pop
1966	Conga1 Hi Tip	Pc	Latin
1967	Conga1 Hi Heel	Pc	Latin
1968	Conga1 Hi Open 1-2	Pc	Latin
1969	Conga1 Hi Open 1	Pc	Latin
1970	Conga1 Hi Open 2	Pc	Latin
1971	Conga1 Hi Mute	Pc	Latin
1972	Conga1 Hi Slap Open	Pc	Latin
1973	Conga1 Hi Slap	Pc	Latin
1974	Conga1 Hi SlpMute1-2	Pc	Latin
1975	Conga1 Hi SlapMute 1	Pc	Latin

No.	Name	Main Category	Sub Category
1976	Conga1 Hi SlapMute 2	Pc	Latin
1977	Conga1 Lo Tip	Pc	Latin
1978	Conga1 Lo Heel	Pc	Latin
1979	Conga1 Lo Open 1-2	Pc	Latin
1980	Conga1 Lo Open 1	Pc	Latin
1981	Conga1 Lo Open 2	Pc	Latin
1982	Conga1 Lo Mute	Pc	Latin
1983	Conga1 Lo Slap Open	Pc	Latin
1984	Conga2 Hi Heel	Pc	Latin
1985	Conga2 Hi Tip	Pc	Latin
1986	Conga2 Hi Slap 1-2	Pc	Latin
1987	Conga2 Hi Slap 1	Pc	Latin
1988	Conga2 Hi Slap 2	Pc	Latin
1989	Conga2 Hi Open 1-2	Pc	Latin
1990	Conga2 Hi Open 1	Pc	Latin
1991	Conga2 Hi Open 2	Pc	Latin
1992	Conga2 Hi Mute	Pc	Latin
1993	Conga2 Lo Open 1-2	Pc	Latin
1994	Conga2 Lo Open 1	Pc	Latin
1995	Conga2 Lo Open 2	Pc	Latin
1996	Conga2 Lo Slide	Pc	Latin
1997	Quinto1 Open	Pc	Latin
1998	Quinto1 Slap	Pc	Latin
1999	Quinto2 Open	Pc	Latin
2000	Quinto2 Heel	Pc	Latin
2001	Tumba Open	Pc	Latin
2002	Tumba Slap	Pc	Latin
2003	Tumba Tip	Pc	Latin
2004	Tumba Heel	Pc	Latin
2005	Cuica Lo	Pc	Latin
2006	Cuica Hi	Pc	Latin
2007	Bongo1 Hi 1Fingr 1-2	Pc	Latin
2008	Bongo1 Hi 1Finger 1	Pc	Latin
2009	Bongo1 Hi 1Finger 2	Pc	Latin
2010	Bongo1 Hi 3Fingr 1-2	Pc	Latin
2011	Bongo1 Hi 3Finger 1	Pc	Latin
2012	Bongo1 Hi 3Finger 2	Pc	Latin
2013	Bongo1 Hi Rim	Pc	Latin
2014	Bongo1 Hi Tip	Pc	Latin
2015	Bongo1 Hi Heel	Pc	Latin
2016	Bongo1 Hi Slap	Pc	Latin
2017	Bongo1 Lo 1Fingr 1-2	Pc	Latin
2018	Bongo1 Lo 1Finger 1	Pc	Latin
2019	Bongo1 Lo 1Finger 2	Pc	Latin
2020	Bongo1 Lo 3Fingr 1-2	Pc	Latin
2021	Bongo1 Lo 3Finger 1	Pc	Latin
2022	Bongo1 Lo 3Finger 2	Pc	Latin
2023	Bongo1 Lo Rim	Pc	Latin
2024	Bongo1 Lo Tip	Pc	Latin
2025	Bongo2 Hi Mute	Pc	Latin
2026	Bongo2 Hi Open 1-2	Pc	Latin
2027	Bongo2 Hi Open 1	Pc	Latin
2028	Bongo2 Hi Open 2	Pc	Latin
2029	Bongo2 Lo Mute	Pc	Latin
2030	Bongo2 Lo Open 1-2	Pc	Latin
2031	Bongo2 Lo Open 1	Pc	Latin
2032	Bongo2 Lo Open 2	Pc	Latin
2033	Timbale1 Hi 1-3	Pc	Latin
2034	Timbale1 Hi 1	Pc	Latin
2035	Timbale1 Hi 2	Pc	Latin
2036	Timbale1 Hi 3	Pc	Latin
2037	Timbale1 Lo 1-2	Pc	Latin
2038	Timbale1 Lo 1	Pc	Latin
2039	Timbale1 Lo 2	Pc	Latin
2040	Timbale1 Rim	Pc	Latin
2041	Timbale1 Paila H	Pc	Latin
2042	Timbale1 Paila L	Pc	Latin
2043	Timbale2 Hi Sw	Pc	Latin
2044	Timbale2 Hi 1	Pc	Latin
2045	Timbale2 Hi 2	Pc	Latin
2046	Timbale2 Hi Rim	Pc	Latin
2047	Timbale2 Lo Sw	Pc	Latin
2048	Timbale2 Lo 1	Pc	Latin
2049	Timbale2 Lo 2	Pc	Latin
2050	Timbale2 Lo Rim	Pc	Latin
2051	Paila L	Pc	Latin
2052	Paila H	Pc	Latin
2053	Ganza Accent	Pc	Latin
2054	Ganza Back	Pc	Latin

No.	Name	Main Category	Sub Category
2055	Ganza Forward	Pc	Latin
2056	Maracas Sw	Pc	Latin
2057	Maracas Slur	Pc	Latin
2058	Maracas Staccato	Pc	Latin
2059	CabasaA 1-2	Pc	Latin
2060	CabasaA 1	Pc	Latin
2061	CabasaA 2	Pc	Latin
2062	CabasaB 1-4	Pc	Latin
2063	CabasaB 1	Pc	Latin
2064	CabasaB 2	Pc	Latin
2065	CabasaB 3	Pc	Latin
2066	CabasaB 4	Pc	Latin
2067	Caxixi 1-2	Pc	Latin
2068	Caxixi 1	Pc	Latin
2069	Caxixi 2	Pc	Latin
2070	Tumbo 1	Pc	Latin
2071	Tumbo 2	Pc	Latin
2072	Tumbo 3	Pc	Latin
2073	Pandeiro Open	Pc	Latin
2074	Pandeiro Thump	Pc	Latin
2075	Pandeiro Tip	Pc	Latin
2076	Pandeiro Heel	Pc	Latin
2077	Tmbourim Open	Pc	Latin
2078	Tmbourim Finger	Pc	Latin
2079	Tmbourim Mute	Pc	Latin
2080	Agogo Hi	Pc	Latin
2081	Agogo Lo	Pc	Latin
2082	Agogo Lo Tap	Pc	Latin
2083	Guiro Long	Pc	Latin
2084	Guiro Short	Pc	Latin
2085	Guiro Swp	Pc	Latin
2086	MetalGuiro Short 1-2	Pc	Latin
2087	MetalGuiro Short 1	Pc	Latin
2088	MetalGuiro Short 2	Pc	Latin
2089	MetalGuiro Long	Pc	Latin
2090	Surdo1 Open	Pc	Latin
2091	Surdo1 Mute	Pc	Latin
2092	Surdo2 Open	Pc	Latin
2093	Surdo2 Mute	Pc	Latin
2094	Cajon1 Kick	Pc	Latin
2095	Cajon1 Slap	Pc	Latin
2096	Cajon1 Tip 1-2	Pc	Latin
2097	Cajon1 Tip 1	Pc	Latin
2098	Cajon1 Tip 2	Pc	Latin
2099	Cajon2 Foot	Pc	Latin
2100	Cajon2 Lo	Pc	Latin
2101	Cajon2 Slap	Pc	Latin
2102	Cajon2 Mute	Pc	Latin
2103	Cajon2 Tip	Pc	Latin
2104	Cajon2 Ghost1	Pc	Latin
2105	Cajon2 Ghost2	Pc	Latin
2106	Claves1	Pc	Latin
2107	Claves2	Pc	Latin
2108	Whistle	Pc	Latin
2109	Cowbell1	Pc	Latin
2110	Cowbell2	Pc	Latin
2111	Cowbell3 Sw	Pc	Latin
2112	Cowbell3 Mute	Pc	Latin
2113	Cowbell3 Open	Pc	Latin
2114	Mambo Bell Sw	Pc	Latin
2115	Mambo Bell1	Pc	Latin
2116	Mambo Bell2	Pc	Latin
2117	Mambo Bell Body	Pc	Latin
2118	ChaCha Bell Sw	Pc	Latin
2119	ChaCha Bell	Pc	Latin
2120	Samba Tambourim Open	Pc	Latin
2121	Samba Tambourim Slap	Pc	Latin
2122	Samba Tambourim Mute	Pc	Latin
2123	Repique Mute	Pc	Latin
2124	Repique Open 1-2	Pc	Latin
2125	Repique Open 1	Pc	Latin
2126	Repique Open 2	Pc	Latin
2127	Berimbau Med	Pc	Latin
2128	Berimbau Hard	Pc	Latin
2129	Log Drum1	Pc	Ethnc
2130	Log Drum2	Pc	Ethnc
2131	Djembe1 Edge	Pc	Ethnc
2132	Djembe1 Mute	Pc	Ethnc
2133	Djembe1 Open	Pc	Ethnc

No.	Name	Main Category	Sub Category
2134	Djembe1 Combi	Pc	Ethnc
2135	Djembe2 Lo	Pc	Ethnc
2136	Djembe2 Slap	Pc	Ethnc
2137	Djembe2 Mute	Pc	Ethnc
2138	Djembe3 Lo	Pc	Ethnc
2139	Djembe3 Slap	Pc	Ethnc
2140	Djembe3 Mute	Pc	Ethnc
2141	Tabla Bya	Pc	Ethnc
2142	Tabla Nah	Pc	Ethnc
2143	Tabla Mute	Pc	Ethnc
2144	Tabla Combi	Pc	Ethnc
2145	Dohol Low	Pc	Ethnc
2146	Dohol High	Pc	Ethnc
2147	Lama Cymbal	Pc	Ethnc
2148	Mondira	Pc	Ethnc
2149	Tibetan Bell	Pc	Ethnc
2150	Tibetan Bowl	Pc	Ethnc
2151	Shekere Shake Sw	Pc	Ethnc
2152	Shekere Down	Pc	Ethnc
2153	Shekere Up	Pc	Ethnc
2154	Shekere Slap	Pc	Ethnc
2155	TalkingDrum Open	Pc	Ethnc
2156	TalkingDrum Slap	Pc	Ethnc
2157	TalkingDrum Mute	Pc	Ethnc
2158	TalkingDrum Bend 1-4	Pc	Ethnc
2159	TalkingDrum Bend 1	Pc	Ethnc
2160	TalkingDrum Bend 2	Pc	Ethnc
2161	TalkingDrum Bend 3	Pc	Ethnc
2162	TalkingDrum Bend 4	Pc	Ethnc
2163	Kenkeni Sw	Pc	Ethnc
2164	Kenkeni Close	Pc	Ethnc
2165	Kenkeni Open	Pc	Ethnc
2166	Sangban Sw	Pc	Ethnc
2167	Sangban Close	Pc	Ethnc
2168	Sangban Open	Pc	Ethnc
2169	Dundun Bell Sw	Pc	Ethnc
2170	Dundun Bell Close	Pc	Ethnc
2171	Dundun Bell Open	Pc	Ethnc
2172	Ainote 1	Pc	Ethnc
2173	Ainote 2	Pc	Ethnc
2174	Chanchiki Chan	Pc	Ethnc
2175	Chanchiki Ki	Pc	Ethnc
2176	Atarigane Con	Pc	Ethnc
2177	Atarigane Chi	Pc	Ethnc
2178	Wa Taiko	Pc	Ethnc
2179	Oo Taiko1 Don	Pc	Ethnc
2180	Oo Taiko1 Ka	Pc	Ethnc
2181	Oo Taiko2 Don Soft	Pc	Ethnc
2182	Oo Taiko2 Don Hard	Pc	Ethnc
2183	Oo Taiko2 Zu	Pc	Ethnc
2184	Oo Taiko2 Ka	Pc	Ethnc
2185	Yagura Taiko1 Don	Pc	Ethnc
2186	Yagura Taiko1 Zu	Pc	Ethnc
2187	Yagura Taiko1 Ka	Pc	Ethnc
2188	Yagura Taiko2 Don	Pc	Ethnc
2189	Yagura Taiko2 Zu	Pc	Ethnc
2190	Yagura Taiko2 Ka	Pc	Ethnc
2191	Shime Taiko1 Ten	Pc	Ethnc
2192	Shime Taiko1 Tsu	Pc	Ethnc
2193	Shime Taiko1 Ku	Pc	Ethnc
2194	Shime Taiko2 Ten	Pc	Ethnc
2195	Shime Taiko2 Tsu	Pc	Ethnc
2196	Shime Taiko2 Ku	Pc	Ethnc
2197	Tsuzumi Pon	Pc	Ethnc
2198	Tsuzumi Pu	Pc	Ethnc
2199	Tsuzumi Chi	Pc	Ethnc
2200	Tsuzumi Ta	Pc	Ethnc
2201	Oo Kawa Chon	Pc	Ethnc
2202	Oo Kawa Tsu	Pc	Ethnc
2203	Oo Kawa Ton	Pc	Ethnc
2204	Small Tabla Dom	Pc	Arabc
2205	Small Tabla Snap	Pc	Arabc
2206	Small Tabla Sak	Pc	Arabc
2207	Small Tabla Tak	Pc	Arabc
2208	Big Tabla Dom	Pc	Arabc
2209	Big Tabla Tak	Pc	Arabc
2210	Big Tabla Sak	Pc	Arabc
2211	Tabla Dom	Pc	Arabc
2212	Tabla Tak1	Pc	Arabc

No.	Name	Main Category	Sub Category
2213	Tabla Tak2	Pc	Arabc
2214	Tabla Tik1	Pc	Arabc
2215	Tabla Tik2	Pc	Arabc
2216	Tabla Tik3	Pc	Arabc
2217	Tabla Sak1	Pc	Arabc
2218	Tabla Tremolo	Pc	Arabc
2219	Udu Finger	Pc	Arabc
2220	Udu High	Pc	Arabc
2221	Udu Low	Pc	Arabc
2222	Udu Combi	Pc	Arabc
2223	Barasim Dom	Pc	Arabc
2224	Barasim Sak	Pc	Arabc
2225	Barasim Tak	Pc	Arabc
2226	Segal Dom	Pc	Arabc
2227	Segal Tak	Pc	Arabc
2228	Twaisat1	Pc	Arabc
2229	Twaisat2	Pc	Arabc
2230	Twaisat3	Pc	Arabc
2231	Twaisat4	Pc	Arabc
2232	AsmaDavulSideBdy 1-2	Pc	Arabc
2233	AsmaDavulSideBody 1	Pc	Arabc
2234	AsmaDavulSideBody 2	Pc	Arabc
2235	AsmaDavul L Side 1-2	Pc	Arabc
2236	AsmaDavul L Side 1	Pc	Arabc
2237	AsmaDavul L Side 2	Pc	Arabc
2238	AsmaDavul Both Sides	Pc	Arabc
2239	AsmaDavul R Side 1-2	Pc	Arabc
2240	AsmaDavul R Side 1	Pc	Arabc
2241	AsmaDavul R Side 2	Pc	Arabc
2242	Koltuk Davul Dum 1-2	Pc	Arabc
2243	Koltuk Davul Dum 1	Pc	Arabc
2244	Koltuk Davul Dum 2	Pc	Arabc
2245	KoltukDavulTekeOp1-3	Pc	Arabc
2246	KoltukDavulTekeOp 1	Pc	Arabc
2247	KoltukDavulTekeOp 2	Pc	Arabc
2248	KoltukDavulTekeOp 3	Pc	Arabc
2249	KoltukDavulTekOp 1-3	Pc	Arabc
2250	KoltukDavulTekOp 1	Pc	Arabc
2251	KoltukDavulTekOp 2	Pc	Arabc
2252	KoltukDavulTekOp 3	Pc	Arabc
2253	KoltukDavulOpenFlam	Pc	Arabc
2254	Bendir Dum 1-2	Pc	Arabc
2255	Bendir Dum 1	Pc	Arabc
2256	Bendir Dum 2	Pc	Arabc
2257	Bendir Tek 1-3	Pc	Arabc
2258	Bendir Tek 1	Pc	Arabc
2259	Bendir Tek 2	Pc	Arabc
2260	Bendir Tek 3	Pc	Arabc
2261	Bendir Teke 1-3	Pc	Arabc
2262	Bendir Teke 1	Pc	Arabc
2263	Bendir Teke 2	Pc	Arabc
2264	Bendir Teke 3	Pc	Arabc
2265	Bendir Teke OpenFlam	Pc	Arabc
2266	Bendir Slap 1-2	Pc	Arabc
2267	Bendir Slap 1	Pc	Arabc
2268	Bendir Slap 2	Pc	Arabc
2269	Bendir Tek Dead 1-2	Pc	Arabc
2270	Bendir Tek Dead 1	Pc	Arabc
2271	Bendir Tek Dead 2	Pc	Arabc
2272	Bendir Teke Dead 1-2	Pc	Arabc
2273	Bendir Teke Dead 1	Pc	Arabc
2274	Bendir Teke Dead 2	Pc	Arabc
2275	Sagat R Open	Pc	Arabc
2276	Sagat R Close 1-2	Pc	Arabc
2277	Sagat R Close 1	Pc	Arabc
2278	Sagat R Close 2	Pc	Arabc
2279	Sagat L Open	Pc	Arabc
2280	Sagat L Close 1-2	Pc	Arabc
2281	Sagat L Close 1	Pc	Arabc
2282	Sagat L Close 2	Pc	Arabc
2283	Riq Dum Mute	Pc	Arabc
2284	Riq Dum Open 1-2	Pc	Arabc
2285	Riq Dum Open 1	Pc	Arabc
2286	Riq Dum Open 2	Pc	Arabc
2287	Riq Tek Open 1-2	Pc	Arabc
2288	Riq Tek Open 1	Pc	Arabc
2289	Riq Tek Open 2	Pc	Arabc
2290	Riq Tek Mute 1-2	Pc	Arabc
2291	Riq Tek Mute 1	Pc	Arabc

No.	Name	Main Category	Sub Category
2292	Riq Tek Mute 2	Pc	Arabc
2293	Riq Teke Damped 1-2	Pc	Arabc
2294	Riq Teke Damped 1	Pc	Arabc
2295	Riq Teke Damped 2	Pc	Arabc
2296	Riq Teke Flam	Pc	Arabc
2297	RiqTekMuteMed 1-2	Pc	Arabc
2298	RiqTekMuteMed 1	Pc	Arabc
2299	RiqTekMuteMed 2	Pc	Arabc
2300	RiqTekOpenShort 1-2	Pc	Arabc
2301	RiqTekOpenShort 1	Pc	Arabc
2302	RiqTekOpenShort 2	Pc	Arabc
2303	RiqTekeOpenShort 1-2	Pc	Arabc
2304	RiqTekeOpenShort 1	Pc	Arabc
2305	RiqTekeOpenShort 2	Pc	Arabc
2306	Riq Tek Flam	Pc	Arabc
2307	Riq Cymbal 1-2	Pc	Arabc
2308	Riq Cymbal 1	Pc	Arabc
2309	Riq Cymbal 2	Pc	Arabc
2310	Riq Cymbal Mute 1-2	Pc	Arabc
2311	Riq Cymbal Mute 1	Pc	Arabc
2312	Riq Cymbal Mute 2	Pc	Arabc
2313	Riq Full Open	Pc	Arabc
2314	Riq ShakeA 1-2	Pc	Arabc
2315	Riq ShakeA 1	Pc	Arabc
2316	Riq ShakeA 2	Pc	Arabc
2317	Riq ShakeB 1-2	Pc	Arabc
2318	Riq ShakeB 1	Pc	Arabc
2319	Riq ShakeB 2	Pc	Arabc
2320	Riq Tremolo	Pc	Arabc
2321	Hollo Dum 1-2	Pc	Arabc
2322	Hollo Dum 1	Pc	Arabc
2323	Hollo Dum 2	Pc	Arabc
2324	Hollo Slap 1-2	Pc	Arabc
2325	Hollo Slap 1	Pc	Arabc
2326	Hollo Slap 2	Pc	Arabc
2327	Hollo FingerDead 1-2	Pc	Arabc
2328	Hollo FingerDead 1	Pc	Arabc
2329	Hollo FingerDead 2	Pc	Arabc
2330	Tombek Dum 1-2	Pc	Arabc
2331	Tombek Dum 1	Pc	Arabc
2332	Tombek Dum 2	Pc	Arabc
2333	Tombek Slap 1-2	Pc	Arabc
2334	Tombek Slap 1	Pc	Arabc
2335	Tombek Slap 2	Pc	Arabc
2336	Tombek Tek 1-3	Pc	Arabc
2337	Tombek Tek 1	Pc	Arabc
2338	Tombek Tek 2	Pc	Arabc
2339	Tombek Tek 3	Pc	Arabc
2340	TombekTekeIndFng 1-3	Pc	Arabc
2341	TombekTekeIndFng 1	Pc	Arabc
2342	TombekTekeIndFng 2	Pc	Arabc
2343	TombekTekeIndFng 3	Pc	Arabc
2344	TombekTekeOthFng 1-3	Pc	Arabc
2345	TombekTekeOthFng 1	Pc	Arabc
2346	TombekTekeOthFng 2	Pc	Arabc
2347	TombekTekeOthFng 3	Pc	Arabc
2348	Tombek Tek Dead Sw	Pc	Arabc
2349	Tombek Tek Dead	Pc	Arabc
2350	Tombek Tek Flam	Pc	Arabc
2351	Tombek Slap Med 1-2	Pc	Arabc
2352	Tombek Slap Med 1	Pc	Arabc
2353	Tombek Slap Med 2	Pc	Arabc
2354	Tombek Teke 1-3	Pc	Arabc
2355	Tombek Teke 1	Pc	Arabc
2356	Tombek Teke 2	Pc	Arabc
2357	Tombek Teke 3	Pc	Arabc
2358	Darbuka Dum 1-2	Pc	Arabc
2359	Darbuka Dum 1	Pc	Arabc
2360	Darbuka Dum 2	Pc	Arabc
2361	Darbuka TekA 1-3	Pc	Arabc
2362	Darbuka TekA 1	Pc	Arabc
2363	Darbuka TekA 2	Pc	Arabc
2364	Darbuka TekA 3	Pc	Arabc
2365	Darbuka TekB 1-3	Pc	Arabc
2366	Darbuka TekB 1	Pc	Arabc
2367	Darbuka TekB 2	Pc	Arabc
2368	Darbuka TekB 3	Pc	Arabc
2369	DarbTekeIndFingA 1-3	Pc	Arabc
2370	DarbTekeIndFingA 1	Pc	Arabc

No.	Name	Main Category	Sub Category
2371	DarbTekeIndFingA 2	Pc	Arabc
2372	DarbTekeIndFingA 3	Pc	Arabc
2373	DarbTekeIndFingB 1-3	Pc	Arabc
2374	DarbTekeIndFingB 1	Pc	Arabc
2375	DarbTekeIndFingB 2	Pc	Arabc
2376	DarbTekeIndFingB 3	Pc	Arabc
2377	DarbTekeOthFingA 1-3	Pc	Arabc
2378	DarbTekeOthFingA 1	Pc	Arabc
2379	DarbTekeOthFingA 2	Pc	Arabc
2380	DarbTekeOthFingA 3	Pc	Arabc
2381	DarbTekeOthFingB 1-3	Pc	Arabc
2382	DarbTekeOthFingB 1	Pc	Arabc
2383	DarbTekeOthFingB 2	Pc	Arabc
2384	DarbTekeOthFingB 3	Pc	Arabc
2385	Darbuka Slap 1-2	Pc	Arabc
2386	Darbuka Slap 1	Pc	Arabc
2387	Darbuka Slap 2	Pc	Arabc
2388	Darbuka SlapMed 1-2	Pc	Arabc
2389	Darbuka SlapMed 1	Pc	Arabc
2390	Darbuka SlapMed 2	Pc	Arabc
2391	Darbuka TekeOpenFlam	Pc	Arabc
2392	Darbuka RollOpen	Pc	Arabc
2393	Darbuka TekeDampFlam	Pc	Arabc
2394	Darbuka Roll Close	Pc	Arabc
2395	Darbuka TekDead 1-3	Pc	Arabc
2396	Darbuka TekDead 1	Pc	Arabc
2397	Darbuka TekDead 2	Pc	Arabc
2398	Darbuka TekDead 3	Pc	Arabc
2399	Darbuka TekDampd 1-3	Pc	Arabc
2400	Darbuka TekDamped 1	Pc	Arabc
2401	Darbuka TekDamped 2	Pc	Arabc
2402	Darbuka TekDamped 3	Pc	Arabc
2403	Darbuka TekeOpen 1-3	Pc	Arabc
2404	Darbuka TekeOpen 1	Pc	Arabc
2405	Darbuka TekeOpen 2	Pc	Arabc
2406	Darbuka TekeOpen 3	Pc	Arabc
2407	Kasik 1-2	Pc	Arabc
2408	Kasik 1	Pc	Arabc
2409	Kasik 2	Pc	Arabc
2410	Kasik Flam Dead	Pc	Arabc
2411	Kasik Flam	Pc	Arabc
2412	Bonges Dum 1-2	Pc	Arabc
2413	Bonges Dum 1	Pc	Arabc
2414	Bonges Dum 2	Pc	Arabc
2415	Bonges Tek 1-2	Pc	Arabc
2416	Bonges Tek 1	Pc	Arabc
2417	Bonges Tek 2	Pc	Arabc
2418	Bonges Slap	Pc	Arabc
2419	Bonges Tek Flam	Pc	Arabc
2420	Bonges Tek Roll	Pc	Arabc
2421	Bonges Flam	Pc	Arabc
2422	Bonges Flam Hi	Pc	Arabc
2423	Clap T9	Pc	Elec
2424	Clap AnSm	Pc	Elec
2425	Electric Clap1	Pc	Elec
2426	Electric Clap2	Pc	Elec
2427	Conga T8	Pc	Elec
2428	Cowbell T8	Pc	Elec
2429	Cowbell RX11	Pc	Elec
2430	Cowbell AnCR	Pc	Elec
2431	Electric Cowbell	Pc	Elec
2432	Analog Shaker	Pc	Elec
2433	Tambourine RX5	Pc	Elec
2434	Tambourine AnCR	Pc	Elec
2435	Electric Tambourine1	Pc	Elec
2436	Electric Tambourine2	Pc	Elec
2437	MaracasT8	Pc	Elec
2438	Electric Maracas	Pc	Elec
2439	Claves T8	Pc	Elec
2440	Electric Triangle	Pc	Elec
2441	Analog Click	Pc	Elec
2442	HipHop Clap1	Pc	Elec
2443	HipHop Clap2	Pc	Elec
2444	HipHop Clap3	Pc	Elec
2445	HipHop Clap4	Pc	Elec
2446	HipHop Clap5	Pc	Elec
2447	HipHop Clap6	Pc	Elec
2448	HipHop Clap7	Pc	Elec
2449	HipHop Clap8	Pc	Elec

No.	Name	Main Category	Sub Category
2450	HipHop Clap9	Pc	Elec
2451	HipHop Clap10	Pc	Elec
2452	HipHop Clap11	Pc	Elec
2453	HipHop Clap12	Pc	Elec
2454	HipHop Clap13	Pc	Elec
2455	HipHop Clap14	Pc	Elec
2456	HipHop Flex1	Pc	Elec
2457	HipHop Flex2	Pc	Elec
2458	HipHop Snap1	Pc	Elec
2459	HipHop Snap2	Pc	Elec
2460	Bd Snap 1-2	Dr	Kick
2461	Bd Snap 1	Dr	Kick
2462	Bd Snap 2	Dr	Kick
2463	Bd Snap L1-2	Dr	Kick
2464	Bd Snap R1-2	Dr	Kick
2465	Bd Snap L1	Dr	Kick
2466	Bd Snap L2	Dr	Kick
2467	Bd Snap R1	Dr	Kick
2468	Bd Snap R2	Dr	Kick
2469	Bd Tight 1-2	Dr	Kick
2470	Bd Tight 1	Dr	Kick
2471	Bd Tight 2	Dr	Kick
2472	Bd Tight L1-2	Dr	Kick
2473	Bd Tight R1-2	Dr	Kick
2474	Bd Tight L1	Dr	Kick
2475	Bd Tight L2	Dr	Kick
2476	Bd Tight R1	Dr	Kick
2477	Bd Tight R2	Dr	Kick
2478	Bd Ambience 1-2	Dr	Kick
2479	Bd Ambience 1	Dr	Kick
2480	Bd Ambience 2	Dr	Kick
2481	Bd Ambience L1-2	Dr	Kick
2482	Bd Ambience R1-2	Dr	Kick
2483	Bd Ambience L1	Dr	Kick
2484	Bd Ambience L2	Dr	Kick
2485	Bd Ambience R1	Dr	Kick
2486	Bd Ambience R2	Dr	Kick
2487	Bd Normal St1-2	Dr	Kick
2488	Bd Normal 1St	Dr	Kick
2489	Bd Normal 2St	Dr	Kick
2490	Bd Normal L1-2	Dr	Kick
2491	Bd Normal R1-2	Dr	Kick
2492	Bd Normal 1L	Dr	Kick
2493	Bd Normal 1R	Dr	Kick
2494	Bd Normal 2L	Dr	Kick
2495	Bd Normal 2R	Dr	Kick
2496	Bd Funk St1-2	Dr	Kick
2497	Bd Funk 1St	Dr	Kick
2498	Bd Funk 2St	Dr	Kick
2499	Bd Funk L1-2	Dr	Kick
2500	Bd Funk R1-2	Dr	Kick
2501	Bd Funk 1 L	Dr	Kick
2502	Bd Funk 1 R	Dr	Kick
2503	Bd Funk 2 L	Dr	Kick
2504	Bd Funk 2 R	Dr	Kick
2505	Bd High St	Dr	Kick
2506	Bd High L	Dr	Kick
2507	Bd High R	Dr	Kick
2508	Bd Low St	Dr	Kick
2509	Bd Low L	Dr	Kick
2510	Bd Low R	Dr	Kick
2511	Bd H Son St	Dr	Kick
2512	Bd H Son L	Dr	Kick
2513	Bd H Son R	Dr	Kick
2514	Bd L Son St	Dr	Kick
2515	Bd L Son L	Dr	Kick
2516	Bd L Son R	Dr	Kick
2517	Bd Funk Son St	Dr	Kick
2518	Bd Funk Son L	Dr	Kick
2519	Bd Funk Son R	Dr	Kick
2520	Bd Rock1 St	Dr	Kick
2521	Bd Rock1 L	Dr	Kick
2522	Bd Rock1 R	Dr	Kick
2523	Bd Rock2 St	Dr	Kick
2524	Bd Rock2 L	Dr	Kick
2525	Bd Rock2 R	Dr	Kick
2526	Bd Dry1	Dr	Kick
2527	Bd Dry2	Dr	Kick
2528	Bd Pop	Dr	Kick

No.	Name	Main Category	Sub Category
2529	Bd Var1	Dr	Kick
2530	Bd Var2	Dr	Kick
2531	Bd Room1	Dr	Kick
2532	Bd Room2	Dr	Kick
2533	Bd Room3	Dr	Kick
2534	Bd Jazz1-2St	Dr	Kick
2535	Bd Jazz1-2L	Dr	Kick
2536	Bd Jazz1-2R	Dr	Kick
2537	Bd Jazz1St	Dr	Kick
2538	Bd Jazz1L	Dr	Kick
2539	Bd Jazz1R	Dr	Kick
2540	Bd Jazz2St	Dr	Kick
2541	Bd Jazz2L	Dr	Kick
2542	Bd Jazz2R	Dr	Kick
2543	Bd FK Jazz St	Dr	Kick
2544	Bd FK Jazz L	Dr	Kick
2545	Bd FK Jazz R	Dr	Kick
2546	Bd PowerA 1-2St	Dr	Kick
2547	Bd PowerA 1-2L	Dr	Kick
2548	Bd PowerA 1-2R	Dr	Kick
2549	Bd PowerA 1St	Dr	Kick
2550	Bd PowerA 1L	Dr	Kick
2551	Bd PowerA 1R	Dr	Kick
2552	Bd PowerA 2St	Dr	Kick
2553	Bd PowerA 2L	Dr	Kick
2554	Bd PowerA 2R	Dr	Kick
2555	Bd PowerB 1-2St	Dr	Kick
2556	Bd PowerB 1-2L	Dr	Kick
2557	Bd PowerB 1-2R	Dr	Kick
2558	Bd PowerB 1St	Dr	Kick
2559	Bd PowerB 1L	Dr	Kick
2560	Bd PowerB 1R	Dr	Kick
2561	Bd PowerB 2St	Dr	Kick
2562	Bd PowerB 2L	Dr	Kick
2563	Bd PowerB 2R	Dr	Kick
2564	Bd Maple Close 1-2St	Dr	Kick
2565	Bd Maple Close 1-2 L	Dr	Kick
2566	Bd Maple Close 1-2 R	Dr	Kick
2567	Bd Maple Close 1 St	Dr	Kick
2568	Bd Maple Close 1 L	Dr	Kick
2569	Bd Maple Close 1 R	Dr	Kick
2570	Bd Maple Close 2 St	Dr	Kick
2571	Bd Maple Close 2 L	Dr	Kick
2572	Bd Maple Close 2 R	Dr	Kick
2573	Bd Maple Open 1-2 St	Dr	Kick
2574	Bd Maple Open 1-2 L	Dr	Kick
2575	Bd Maple Open 1-2 R	Dr	Kick
2576	Bd Maple Open 1 St	Dr	Kick
2577	Bd Maple Open 1 L	Dr	Kick
2578	Bd Maple Open 1 R	Dr	Kick
2579	Bd Maple Open 2 St	Dr	Kick
2580	Bd Maple Open 2 L	Dr	Kick
2581	Bd Maple Open 2 R	Dr	Kick
2582	Bd Oak Open 1-2 St	Dr	Kick
2583	Bd Oak Open 1-2 L	Dr	Kick
2584	Bd Oak Open 1-2 R	Dr	Kick
2585	Bd Oak Open 1 St	Dr	Kick
2586	Bd Oak Open 1 L	Dr	Kick
2587	Bd Oak Open 1 R	Dr	Kick
2588	Bd Oak Open 2 St	Dr	Kick
2589	Bd Oak Open 2 L	Dr	Kick
2590	Bd Oak Open 2 R	Dr	Kick
2591	Bd Oak Close 1-2 St	Dr	Kick
2592	Bd Oak Close 1-2 L	Dr	Kick
2593	Bd Oak Close 1-2 R	Dr	Kick
2594	Bd Oak Close 1 St	Dr	Kick
2595	Bd Oak Close 1 L	Dr	Kick
2596	Bd Oak Close 1 R	Dr	Kick
2597	Bd Oak Close 2 St	Dr	Kick
2598	Bd Oak Close 2 L	Dr	Kick
2599	Bd Oak Close 2 R	Dr	Kick
2600	Bd NJz Closed 1-2 St	Dr	Kick
2601	Bd NJz Closed 1-2 L	Dr	Kick
2602	Bd NJz Closed 1-2 R	Dr	Kick
2603	Bd NJz Closed 1 St	Dr	Kick
2604	Bd NJz Closed 1 L	Dr	Kick
2605	Bd NJz Closed 1 R	Dr	Kick
2606	Bd NJz Closed 2 St	Dr	Kick
2607	Bd NJz Closed 2 L	Dr	Kick

No.	Name	Main Category	Sub Category
2608	Bd NJz Closed 2 R	Dr	Kick
2609	Bd NJz Open 1-2 St	Dr	Kick
2610	Bd NJz Open 1-2 L	Dr	Kick
2611	Bd NJz Open 1-2 R	Dr	Kick
2612	Bd NJz Open 1 St	Dr	Kick
2613	Bd NJz Open 1 L	Dr	Kick
2614	Bd NJz Open 1 R	Dr	Kick
2615	Bd NJz Open 2 St	Dr	Kick
2616	Bd NJz Open 2 L	Dr	Kick
2617	Bd NJz Open 2 R	Dr	Kick
2618	Bd GranCasaA Open St	Dr	Kick
2619	Bd GranCasaA Open L	Dr	Kick
2620	Bd GranCasaA Open R	Dr	Kick
2621	Bd GranCasaA Mute St	Dr	Kick
2622	Bd GranCasaA Mute L	Dr	Kick
2623	Bd GranCasaA Mute R	Dr	Kick
2624	Bd GranCasaB 1-3 St	Dr	Kick
2625	Bd GranCasaB 1-3 L	Dr	Kick
2626	Bd GranCasaB 1-3 R	Dr	Kick
2627	Bd GranCasaB 1 St	Dr	Kick
2628	Bd GranCasaB 1 L	Dr	Kick
2629	Bd GranCasaB 1 R	Dr	Kick
2630	Bd GranCasaB 2 St	Dr	Kick
2631	Bd GranCasaB 2 L	Dr	Kick
2632	Bd GranCasaB 2 R	Dr	Kick
2633	Bd GranCasaB 3 St	Dr	Kick
2634	Bd GranCasaB 3 L	Dr	Kick
2635	Bd GranCasaB 3 R	Dr	Kick
2636	Bd GranCasaB Hoop St	Dr	Kick
2637	Bd GranCasaB Hoop L	Dr	Kick
2638	Bd GranCasaB Hoop R	Dr	Kick
2639	Bd GranCasaB Mfl St	Dr	Kick
2640	Bd GranCasaB Mfl L	Dr	Kick
2641	Bd GranCasaB Mfl R	Dr	Kick
2642	Bd Gate	Dr	Kick
2643	Bd FX Gate	Dr	Kick
2644	Bd T9-1	Dr	Kick
2645	Bd T9-2	Dr	Kick
2646	Bd T9-3	Dr	Kick
2647	Bd T9-4	Dr	Kick
2648	Bd T9 Hd1	Dr	Kick
2649	Bd T9 Hd2	Dr	Kick
2650	Bd T9 Hd3	Dr	Kick
2651	Bd T8-1	Dr	Kick
2652	Bd T8-2	Dr	Kick
2653	Bd T8-3	Dr	Kick
2654	Bd AnSm	Dr	Kick
2655	Bd AnCR	Dr	Kick
2656	Bd RX11	Dr	Kick
2657	Bd Human1	Dr	Kick
2658	Bd Human2	Dr	Kick
2659	Bd Blip	Dr	Kick
2660	Bd BlpHd	Dr	Kick
2661	Bd Jungle1	Dr	Kick
2662	Bd Jungle2	Dr	Kick
2663	Bd Jungle3	Dr	Kick
2664	Bd D&B1	Dr	Kick
2665	Bd D&B2	Dr	Kick
2666	Bd R&B1	Dr	Kick
2667	Bd R&B2	Dr	Kick
2668	Bd Hip Deep	Dr	Kick
2669	Bd Break Deep	Dr	Kick
2670	Bd Break1	Dr	Kick
2671	Bd Break2	Dr	Kick
2672	Bd Break Heavy	Dr	Kick
2673	Bd Break Hard	Dr	Kick
2674	Bd Distortion1	Dr	Kick
2675	Bd Distortion2	Dr	Kick
2676	Bd Distortion3	Dr	Kick
2677	Bd Distortion4	Dr	Kick
2678	Bd Distortion5	Dr	Kick
2679	Bd Distortion RM	Dr	Kick
2680	Bd +HH	Dr	Kick
2681	Bd FxHammer	Dr	Kick
2682	Bd ZapHard	Dr	Kick
2683	Bd ZapMid	Dr	Kick
2684	Bd Sustain	Dr	Kick
2685	Bd TekPower	Dr	Kick
2686	Bd Hard Long	Dr	Kick

No.	Name	Main Category	Sub Category
2687	Bd Analog Tight	Dr	Kick
2688	Bd AnaHard	Dr	Kick
2689	Bd Lo-Fi	Dr	Kick
2690	Bd ThickSkin	Dr	Kick
2691	Bd Slimy	Dr	Kick
2692	Bd Elec1	Dr	Kick
2693	Bd Elec2	Dr	Kick
2694	Bd Elec3	Dr	Kick
2695	Bd Elec4	Dr	Kick
2696	Bd ElecComp1	Dr	Kick
2697	Bd ElecComp2	Dr	Kick
2698	Bd ElecComp3	Dr	Kick
2699	Bd ElecFX1	Dr	Kick
2700	Bd ElecFX2	Dr	Kick
2701	Bd ElecGate	Dr	Kick
2702	Bd ElecClick	Dr	Kick
2703	Bd ElecPower1	Dr	Kick
2704	Bd ElecPower2	Dr	Kick
2705	Bd HipHop1	Dr	Kick
2706	Bd HipHop2	Dr	Kick
2707	Bd HipHop3	Dr	Kick
2708	Bd HipHop4	Dr	Kick
2709	Bd HipHop5	Dr	Kick
2710	Bd HipHop6	Dr	Kick
2711	Bd HipHop7	Dr	Kick
2712	Bd HipHop8	Dr	Kick
2713	Bd HipHop9	Dr	Kick
2714	Bd HipHop10	Dr	Kick
2715	Bd HipHop11	Dr	Kick
2716	Bd HipHop12	Dr	Kick
2717	Bd HipHop13	Dr	Kick
2718	Sd Bld St1-4	Dr	Snare
2719	Sd Bld St1-3	Dr	Snare
2720	Sd Bld St2-4	Dr	Snare
2721	Sd Bld St1-2	Dr	Snare
2722	Sd Bld St2-3	Dr	Snare
2723	Sd Bld St3-4	Dr	Snare
2724	Sd Bld St1	Dr	Snare
2725	Sd Bld St2	Dr	Snare
2726	Sd Bld St3	Dr	Snare
2727	Sd Bld St4	Dr	Snare
2728	Sd Bld L1-4	Dr	Snare
2729	Sd Bld R1-4	Dr	Snare
2730	Sd Bld L1	Dr	Snare
2731	Sd Bld L2	Dr	Snare
2732	Sd Bld L3	Dr	Snare
2733	Sd Bld L4	Dr	Snare
2734	Sd Bld R1	Dr	Snare
2735	Sd Bld R2	Dr	Snare
2736	Sd Bld R3	Dr	Snare
2737	Sd Bld R4	Dr	Snare
2738	Sd Soul St1-4	Dr	Snare
2739	Sd Soul St1-3	Dr	Snare
2740	Sd Soul St2-4	Dr	Snare
2741	Sd Soul St1-2	Dr	Snare
2742	Sd Soul St2-3	Dr	Snare
2743	Sd Soul St3-4	Dr	Snare
2744	Sd Soul L1-4	Dr	Snare
2745	Sd Soul R1-4	Dr	Snare
2746	Sd Soul St1	Dr	Snare
2747	Sd Soul St2	Dr	Snare
2748	Sd Soul St3	Dr	Snare
2749	Sd Soul St4	Dr	Snare
2750	Sd Soul L1	Dr	Snare
2751	Sd Soul L2	Dr	Snare
2752	Sd Soul L3	Dr	Snare
2753	Sd Soul L4	Dr	Snare
2754	Sd Soul R1	Dr	Snare
2755	Sd Soul R2	Dr	Snare
2756	Sd Soul R3	Dr	Snare
2757	Sd Soul R4	Dr	Snare
2758	Sd Strong St1-4	Dr	Snare
2759	Sd Strong St1-3	Dr	Snare
2760	Sd Strong St2-4	Dr	Snare
2761	Sd Strong St1-2	Dr	Snare
2762	Sd Strong St2-3	Dr	Snare
2763	Sd Strong St3-4	Dr	Snare
2764	Sd Strong St1	Dr	Snare
2765	Sd Strong St2	Dr	Snare

No.	Name	Main Category	Sub Category
2766	Sd Strong St3	Dr	Snare
2767	Sd Strong St4	Dr	Snare
2768	Sd Strong L1-4	Dr	Snare
2769	Sd Strong R1-4	Dr	Snare
2770	Sd Strong L1	Dr	Snare
2771	Sd Strong L2	Dr	Snare
2772	Sd Strong L3	Dr	Snare
2773	Sd Strong L4	Dr	Snare
2774	Sd Strong R1	Dr	Snare
2775	Sd Strong R2	Dr	Snare
2776	Sd Strong R3	Dr	Snare
2777	Sd Strong R4	Dr	Snare
2778	Sd Rng St1-4	Dr	Snare
2779	Sd Rng St1-3	Dr	Snare
2780	Sd Rng St2-4	Dr	Snare
2781	Sd Rng St1-2	Dr	Snare
2782	Sd Rng St2-3	Dr	Snare
2783	Sd Rng St3-4	Dr	Snare
2784	Sd Rng St1	Dr	Snare
2785	Sd Rng St2	Dr	Snare
2786	Sd Rng St3	Dr	Snare
2787	Sd Rng St4	Dr	Snare
2788	Sd Rng L1-4	Dr	Snare
2789	Sd Rng R1-4	Dr	Snare
2790	Sd Rng L1	Dr	Snare
2791	Sd Rng L2	Dr	Snare
2792	Sd Rng L3	Dr	Snare
2793	Sd Rng L4	Dr	Snare
2794	Sd Rng R1	Dr	Snare
2795	Sd Rng R2	Dr	Snare
2796	Sd Rng R3	Dr	Snare
2797	Sd Rng R4	Dr	Snare
2798	Sd Normal St1-4	Dr	Snare
2799	Sd Normal St1-3	Dr	Snare
2800	Sd Normal St2-4	Dr	Snare
2801	Sd Normal St1-2	Dr	Snare
2802	Sd Normal St2-3	Dr	Snare
2803	Sd Normal St3-4	Dr	Snare
2804	Sd Normal 1St	Dr	Snare
2805	Sd Normal 2St	Dr	Snare
2806	Sd Normal 3St	Dr	Snare
2807	Sd Normal 4St	Dr	Snare
2808	Sd Normal L1-4	Dr	Snare
2809	Sd Normal R1-4	Dr	Snare
2810	Sd Normal 1L	Dr	Snare
2811	Sd Normal 1R	Dr	Snare
2812	Sd Normal 2L	Dr	Snare
2813	Sd Normal 2R	Dr	Snare
2814	Sd Normal 3L	Dr	Snare
2815	Sd Normal 3R	Dr	Snare
2816	Sd Normal 4L	Dr	Snare
2817	Sd Normal 4R	Dr	Snare
2818	Sd Funk St1-3	Dr	Snare
2819	Sd Funk St1-2	Dr	Snare
2820	Sd Funk St2-3	Dr	Snare
2821	Sd Funk St1/3	Dr	Snare
2822	Sd Funk 1St	Dr	Snare
2823	Sd Funk 2St	Dr	Snare
2824	Sd Funk 3St	Dr	Snare
2825	Sd Funk L1-3	Dr	Snare
2826	Sd Funk R1-3	Dr	Snare
2827	Sd Funk 1L	Dr	Snare
2828	Sd Funk 1R	Dr	Snare
2829	Sd Funk 2L	Dr	Snare
2830	Sd Funk 2R	Dr	Snare
2831	Sd Funk 3L	Dr	Snare
2832	Sd Funk 3R	Dr	Snare
2833	Sd Funk Ay St	Dr	Snare
2834	Sd Funk Ay L	Dr	Snare
2835	Sd Funk Ay R	Dr	Snare
2836	Sd Basic St1-3	Dr	Snare
2837	Sd Basic St1-2	Dr	Snare
2838	Sd Basic St2-3	Dr	Snare
2839	Sd Basic St1/3	Dr	Snare
2840	Sd Basic 1St	Dr	Snare
2841	Sd Basic 2St	Dr	Snare
2842	Sd Basic 3St	Dr	Snare
2843	Sd Basic L1-3	Dr	Snare
2844	Sd Basic R1-3	Dr	Snare

No.	Name	Main Category	Sub Category
2845	Sd Basic 1L	Dr	Snare
2846	Sd Basic 1R	Dr	Snare
2847	Sd Basic 2L	Dr	Snare
2848	Sd Basic 2R	Dr	Snare
2849	Sd Basic 3L	Dr	Snare
2850	Sd Basic 3R	Dr	Snare
2851	Sd SonA St1-4	Dr	Snare
2852	Sd SonA St1-3	Dr	Snare
2853	Sd SonA St2-4	Dr	Snare
2854	Sd SonA St1-2	Dr	Snare
2855	Sd SonA St2-3	Dr	Snare
2856	Sd SonA St3-4	Dr	Snare
2857	Sd SonA 1St	Dr	Snare
2858	Sd SonA 2St	Dr	Snare
2859	Sd SonA 3St	Dr	Snare
2860	Sd SonA 4St	Dr	Snare
2861	Sd SonA L1-4	Dr	Snare
2862	Sd SonA R1-4	Dr	Snare
2863	Sd SonA 1L	Dr	Snare
2864	Sd SonA 1R	Dr	Snare
2865	Sd SonA 2L	Dr	Snare
2866	Sd SonA 2R	Dr	Snare
2867	Sd SonA 3L	Dr	Snare
2868	Sd SonA 3R	Dr	Snare
2869	Sd SonA 4L	Dr	Snare
2870	Sd SonA 4R	Dr	Snare
2871	Sd Blues St1-3	Dr	Snare
2872	Sd Blues St1-2	Dr	Snare
2873	Sd Blues St2-3	Dr	Snare
2874	Sd Blues St1/3	Dr	Snare
2875	Sd Blues 1St	Dr	Snare
2876	Sd Blues 2St	Dr	Snare
2877	Sd Blues 3St	Dr	Snare
2878	Sd Blues L1-3	Dr	Snare
2879	Sd Blues R1-3	Dr	Snare
2880	Sd Blues 1L	Dr	Snare
2881	Sd Blues 1R	Dr	Snare
2882	Sd Blues 2L	Dr	Snare
2883	Sd Blues 2R	Dr	Snare
2884	Sd Blues 3L	Dr	Snare
2885	Sd Blues 3R	Dr	Snare
2886	Sd BluesHeart St1-3	Dr	Snare
2887	Sd BluesHeart St1-2	Dr	Snare
2888	Sd BluesHeart St2-3	Dr	Snare
2889	Sd BluesHeart St1/3	Dr	Snare
2890	Sd BluesHeart 1St	Dr	Snare
2891	Sd BluesHeart 2St	Dr	Snare
2892	Sd BluesHeart 3St	Dr	Snare
2893	Sd BluesHeart L1-3	Dr	Snare
2894	Sd BluesHeart R1-3	Dr	Snare
2895	Sd BluesHeart 1L	Dr	Snare
2896	Sd BluesHeart 1R	Dr	Snare
2897	Sd BluesHeart 2L	Dr	Snare
2898	Sd BluesHeart 2R	Dr	Snare
2899	Sd BluesHeart 3L	Dr	Snare
2900	Sd BluesHeart 3R	Dr	Snare
2901	Sd Tight St1-4	Dr	Snare
2902	Sd Tight St1-3	Dr	Snare
2903	Sd Tight St2-4	Dr	Snare
2904	Sd Tight St1-2	Dr	Snare
2905	Sd Tight St2-3	Dr	Snare
2906	Sd Tight St3-4	Dr	Snare
2907	Sd Tight 1St	Dr	Snare
2908	Sd Tight 2St	Dr	Snare
2909	Sd Tight 3St	Dr	Snare
2910	Sd Tight 4St	Dr	Snare
2911	Sd Tight L1-4	Dr	Snare
2912	Sd Tight R1-4	Dr	Snare
2913	Sd Tight 1L	Dr	Snare
2914	Sd Tight 1R	Dr	Snare
2915	Sd Tight 2L	Dr	Snare
2916	Sd Tight 2R	Dr	Snare
2917	Sd Tight 3L	Dr	Snare
2918	Sd Tight 3R	Dr	Snare
2919	Sd Tight 4L	Dr	Snare
2920	Sd Tight 4R	Dr	Snare
2921	Sd Hip St1-2	Dr	Snare
2922	Sd Hip 1St	Dr	Snare
2923	Sd Hip 2St	Dr	Snare

No.	Name	Main Category	Sub Category
2924	Sd Hip L1-2	Dr	Snare
2925	Sd Hip R1-2	Dr	Snare
2926	Sd Hip 1L	Dr	Snare
2927	Sd Hip 1R	Dr	Snare
2928	Sd Hip 2L	Dr	Snare
2929	Sd Hip 2R	Dr	Snare
2930	Sd Rock Open1 St	Dr	Snare
2931	Sd Rock Open1 L	Dr	Snare
2932	Sd Rock Open1 R	Dr	Snare
2933	Sd Rock Mute1 St	Dr	Snare
2934	Sd Rock Mute1 L	Dr	Snare
2935	Sd Rock Mute1 R	Dr	Snare
2936	Sd Rock Rim1 St	Dr	Snare
2937	Sd Rock Rim1 L	Dr	Snare
2938	Sd Rock Rim1 R	Dr	Snare
2939	Sd Rock Open2 St	Dr	Snare
2940	Sd Rock Open2 L	Dr	Snare
2941	Sd Rock Open2 R	Dr	Snare
2942	Sd Rock Mute2 St	Dr	Snare
2943	Sd Rock Mute2 L	Dr	Snare
2944	Sd Rock Mute2 R	Dr	Snare
2945	Sd Rock Rim2 St	Dr	Snare
2946	Sd Rock Rim2 L	Dr	Snare
2947	Sd Rock Rim2 R	Dr	Snare
2948	Sd Rock Flam St	Dr	Snare
2949	Sd Rock Flam L	Dr	Snare
2950	Sd Rock Flam R	Dr	Snare
2951	Sd Piccolo	Dr	Snare
2952	Sd Piccolo Rim1	Dr	Snare
2953	Sd Piccolo Rim2	Dr	Snare
2954	Sd Mid	Dr	Snare
2955	Sd Mid Rim	Dr	Snare
2956	Sd Ambience	Dr	Snare
2957	Sd PowerA 1-5St	Dr	Snare
2958	Sd PowerA 1-5L	Dr	Snare
2959	Sd PowerA 1-5R	Dr	Snare
2960	Sd PowerA 1-4St	Dr	Snare
2961	Sd PowerA 1-4L	Dr	Snare
2962	Sd PowerA 1-4R	Dr	Snare
2963	Sd PowerA 1St	Dr	Snare
2964	Sd PowerA 1L	Dr	Snare
2965	Sd PowerA 1R	Dr	Snare
2966	Sd PowerA 2St	Dr	Snare
2967	Sd PowerA 2L	Dr	Snare
2968	Sd PowerA 2R	Dr	Snare
2969	Sd PowerA 3St	Dr	Snare
2970	Sd PowerA 3L	Dr	Snare
2971	Sd PowerA 3R	Dr	Snare
2972	Sd PowerA 4St	Dr	Snare
2973	Sd PowerA 4L	Dr	Snare
2974	Sd PowerA 4R	Dr	Snare
2975	Sd PowerA 5St	Dr	Snare
2976	Sd PowerA 5L	Dr	Snare
2977	Sd PowerA 5R	Dr	Snare
2978	Sd PowerB 1-5St	Dr	Snare
2979	Sd PowerB 1-5L	Dr	Snare
2980	Sd PowerB 1-5R	Dr	Snare
2981	Sd PowerB 1-4St	Dr	Snare
2982	Sd PowerB 1-4L	Dr	Snare
2983	Sd PowerB 1-4R	Dr	Snare
2984	Sd PowerB 1St	Dr	Snare
2985	Sd PowerB 1L	Dr	Snare
2986	Sd PowerB 1R	Dr	Snare
2987	Sd PowerB 2St	Dr	Snare
2988	Sd PowerB 2L	Dr	Snare
2989	Sd PowerB 2R	Dr	Snare
2990	Sd PowerB 3St	Dr	Snare
2991	Sd PowerB 3L	Dr	Snare
2992	Sd PowerB 3R	Dr	Snare
2993	Sd PowerB 4St	Dr	Snare
2994	Sd PowerB 4L	Dr	Snare
2995	Sd PowerB 4R	Dr	Snare
2996	Sd PowerB 5St	Dr	Snare
2997	Sd PowerB 5L	Dr	Snare
2998	Sd PowerB 5R	Dr	Snare
2999	Sd PowerB SSt	Dr	Snare
3000	Sd PowerB SL	Dr	Snare
3001	Sd PowerB SR	Dr	Snare
3002	Sd PowerC 1-5St	Dr	Snare

No.	Name	Main Category	Sub Category
3003	Sd PowerC 1-5L	Dr	Snare
3004	Sd PowerC 1-5R	Dr	Snare
3005	Sd PowerC 1-4St	Dr	Snare
3006	Sd PowerC 1-4L	Dr	Snare
3007	Sd PowerC 1-4R	Dr	Snare
3008	Sd PowerC 1St	Dr	Snare
3009	Sd PowerC 1L	Dr	Snare
3010	Sd PowerC 1R	Dr	Snare
3011	Sd PowerC 2St	Dr	Snare
3012	Sd PowerC 2L	Dr	Snare
3013	Sd PowerC 2R	Dr	Snare
3014	Sd PowerC 3St	Dr	Snare
3015	Sd PowerC 3L	Dr	Snare
3016	Sd PowerC 3R	Dr	Snare
3017	Sd PowerC 4St	Dr	Snare
3018	Sd PowerC 4L	Dr	Snare
3019	Sd PowerC 4R	Dr	Snare
3020	Sd PowerC 5St	Dr	Snare
3021	Sd PowerC 5L	Dr	Snare
3022	Sd PowerC 5R	Dr	Snare
3023	Sd PowerD 1-5St	Dr	Snare
3024	Sd PowerD 1-5L	Dr	Snare
3025	Sd PowerD 1-5R	Dr	Snare
3026	Sd PowerD 1-4St	Dr	Snare
3027	Sd PowerD 1-4L	Dr	Snare
3028	Sd PowerD 1-4R	Dr	Snare
3029	Sd PowerD 1St	Dr	Snare
3030	Sd PowerD 1L	Dr	Snare
3031	Sd PowerD 1R	Dr	Snare
3032	Sd PowerD 2St	Dr	Snare
3033	Sd PowerD 2L	Dr	Snare
3034	Sd PowerD 2R	Dr	Snare
3035	Sd PowerD 3St	Dr	Snare
3036	Sd PowerD 3L	Dr	Snare
3037	Sd PowerD 3R	Dr	Snare
3038	Sd PowerD 4St	Dr	Snare
3039	Sd PowerD 4L	Dr	Snare
3040	Sd PowerD 4R	Dr	Snare
3041	Sd PowerD 5St	Dr	Snare
3042	Sd PowerD 5L	Dr	Snare
3043	Sd PowerD 5R	Dr	Snare
3044	Sd Oak 1-4 St	Dr	Snare
3045	Sd Oak 1-4 L	Dr	Snare
3046	Sd Oak 1-4 R	Dr	Snare
3047	Sd Oak 1-OpRm St	Dr	Snare
3048	Sd Oak 1-OpRm L	Dr	Snare
3049	Sd Oak 1-OpRm R	Dr	Snare
3050	Sd Oak 1 St	Dr	Snare
3051	Sd Oak 1 L	Dr	Snare
3052	Sd Oak 1 R	Dr	Snare
3053	Sd Oak 2 St	Dr	Snare
3054	Sd Oak 2 L	Dr	Snare
3055	Sd Oak 2 R	Dr	Snare
3056	Sd Oak 3 St	Dr	Snare
3057	Sd Oak 3 L	Dr	Snare
3058	Sd Oak 3 R	Dr	Snare
3059	Sd Oak 4 St	Dr	Snare
3060	Sd Oak 4 L	Dr	Snare
3061	Sd Oak 4 R	Dr	Snare
3062	Sd Oak OpRm 1-2 St	Dr	Snare
3063	Sd Oak OpRm 1-2 L	Dr	Snare
3064	Sd Oak OpRm 1-2 R	Dr	Snare
3065	Sd Oak OpRm 1 St	Dr	Snare
3066	Sd Oak OpRm 1 L	Dr	Snare
3067	Sd Oak OpRm 1 R	Dr	Snare
3068	Sd Oak OpRm 2 St	Dr	Snare
3069	Sd Oak OpRm 2 L	Dr	Snare
3070	Sd Oak OpRm 2 R	Dr	Snare
3071	Sd Oak ClRm St	Dr	Snare
3072	Sd Oak ClRm L	Dr	Snare
3073	Sd Oak ClRm R	Dr	Snare
3074	Sd Beech 1-4 St	Dr	Snare
3075	Sd Beech 1-4 L	Dr	Snare
3076	Sd Beech 1-4 R	Dr	Snare
3077	Sd Beech 1-OpRm St	Dr	Snare
3078	Sd Beech 1-OpRm L	Dr	Snare
3079	Sd Beech 1-OpRm R	Dr	Snare
3080	Sd Beech 1 St	Dr	Snare
3081	Sd Beech 1 L	Dr	Snare

No.	Name	Main Category	Sub Category
3082	Sd Beech 1 R	Dr	Snare
3083	Sd Beech 2 St	Dr	Snare
3084	Sd Beech 2 L	Dr	Snare
3085	Sd Beech 2 R	Dr	Snare
3086	Sd Beech 3 St	Dr	Snare
3087	Sd Beech 3 L	Dr	Snare
3088	Sd Beech 3 R	Dr	Snare
3089	Sd Beech 4 St	Dr	Snare
3090	Sd Beech 4 L	Dr	Snare
3091	Sd Beech 4 R	Dr	Snare
3092	Sd Beech OpRm 1-2 St	Dr	Snare
3093	Sd Beech OpRm 1-2 L	Dr	Snare
3094	Sd Beech OpRm 1-2 R	Dr	Snare
3095	Sd Beech OpRm 1 St	Dr	Snare
3096	Sd Beech OpRm 1 L	Dr	Snare
3097	Sd Beech OpRm 1 R	Dr	Snare
3098	Sd Beech OpRm 2 St	Dr	Snare
3099	Sd Beech OpRm 2 L	Dr	Snare
3100	Sd Beech OpRm 2 R	Dr	Snare
3101	Sd Beech ClRm St	Dr	Snare
3102	Sd Beech ClRm L	Dr	Snare
3103	Sd Beech ClRm R	Dr	Snare
3104	Sd Metal 1-4 St	Dr	Snare
3105	Sd Metal 1-4 L	Dr	Snare
3106	Sd Metal 1-4 R	Dr	Snare
3107	Sd Metal 1-OpRm St	Dr	Snare
3108	Sd Metal 1-OpRm L	Dr	Snare
3109	Sd Metal 1-OpRm R	Dr	Snare
3110	Sd Metal 1 St	Dr	Snare
3111	Sd Metal 1 L	Dr	Snare
3112	Sd Metal 1 R	Dr	Snare
3113	Sd Metal 2 St	Dr	Snare
3114	Sd Metal 2 L	Dr	Snare
3115	Sd Metal 2 R	Dr	Snare
3116	Sd Metal 3 St	Dr	Snare
3117	Sd Metal 3 L	Dr	Snare
3118	Sd Metal 3 R	Dr	Snare
3119	Sd Metal 4 St	Dr	Snare
3120	Sd Metal 4 L	Dr	Snare
3121	Sd Metal 4 R	Dr	Snare
3122	Sd Metal OpRm 1-2 St	Dr	Snare
3123	Sd Metal OpRm 1-2 L	Dr	Snare
3124	Sd Metal OpRm 1-2 R	Dr	Snare
3125	Sd Metal OpRm 1 St	Dr	Snare
3126	Sd Metal OpRm 1 L	Dr	Snare
3127	Sd Metal OpRm 1 R	Dr	Snare
3128	Sd Metal OpRm 2 St	Dr	Snare
3129	Sd Metal OpRm 2 L	Dr	Snare
3130	Sd Metal OpRm 2 R	Dr	Snare
3131	Sd Metal ClRm St	Dr	Snare
3132	Sd Metal ClRm L	Dr	Snare
3133	Sd Metal ClRm R	Dr	Snare
3134	Sd Metal SnRoll St	Dr	Snare
3135	Sd Metal SnRoll L	Dr	Snare
3136	Sd Metal SnRoll R	Dr	Snare
3137	Sd NJz 1-4 St	Dr	Snare
3138	Sd NJz 1-4 L	Dr	Snare
3139	Sd NJz 1-4 R	Dr	Snare
3140	Sd NJz 1-OpRm St	Dr	Snare
3141	Sd NJz 1-OpRm L	Dr	Snare
3142	Sd NJz 1-OpRm R	Dr	Snare
3143	Sd NJz 1 St	Dr	Snare
3144	Sd NJz 1 L	Dr	Snare
3145	Sd NJz 1 R	Dr	Snare
3146	Sd NJz 2 St	Dr	Snare
3147	Sd NJz 2 L	Dr	Snare
3148	Sd NJz 2 R	Dr	Snare
3149	Sd NJz 3 St	Dr	Snare
3150	Sd NJz 3 L	Dr	Snare
3151	Sd NJz 3 R	Dr	Snare
3152	Sd NJz 4 St	Dr	Snare
3153	Sd NJz 4 L	Dr	Snare
3154	Sd NJz 4 R	Dr	Snare
3155	Sd NJz OpRm 1-2 St	Dr	Snare
3156	Sd NJz OpRm 1-2 L	Dr	Snare
3157	Sd NJz OpRm 1-2 R	Dr	Snare
3158	Sd NJz OpRm 1 St	Dr	Snare
3159	Sd NJz OpRm 1 L	Dr	Snare
3160	Sd NJz OpRm 1 R	Dr	Snare

No.	Name	Main Category	Sub Category
3161	Sd NJz OpRm 2 St	Dr	Snare
3162	Sd NJz OpRm 2 L	Dr	Snare
3163	Sd NJz OpRm 2 R	Dr	Snare
3164	Sd NJz ClRm St	Dr	Snare
3165	Sd NJz ClRm L	Dr	Snare
3166	Sd NJz ClRm R	Dr	Snare
3167	Sd Gate1	Dr	Snare
3168	Sd Gate2	Dr	Snare
3169	Sd LdwHMono	Dr	Snare
3170	Sd BreakRim	Dr	Snare
3171	Sd Dry	Dr	Snare
3172	Sd Heavy	Dr	Snare
3173	Sd GM	Dr	Snare
3174	Sd Rock Stick1 St	Dr	Snare
3175	Sd Rock Stick1 L	Dr	Snare
3176	Sd Rock Stick1 R	Dr	Snare
3177	Sd Rock Stick2 St	Dr	Snare
3178	Sd Rock Stick2 L	Dr	Snare
3179	Sd Rock Stick2 R	Dr	Snare
3180	Sd Hip Stick1	Dr	Snare
3181	Sd Hip Stick2	Dr	Snare
3182	Sd Hip Stick3	Dr	Snare
3183	Sd Hip Stick4	Dr	Snare
3184	Sd Hip Stick5	Dr	Snare
3185	Sd Hip Stick6 St	Dr	Snare
3186	Sd Hip Stick6 L	Dr	Snare
3187	Sd Hip Stick6 R	Dr	Snare
3188	Sd Hip Stick7	Dr	Snare
3189	Sd Hip Stick8	Dr	Snare
3190	Sd Closed Rim St	Dr	Snare
3191	Sd Closed Rim L	Dr	Snare
3192	Sd Closed Rim R	Dr	Snare
3193	Sd Closed Rim2	Dr	Snare
3194	Sd Closed Rim3	Dr	Snare
3195	Sd RockRoll St	Dr	Snare
3196	Sd RockRoll L	Dr	Snare
3197	Sd RockRoll R	Dr	Snare
3198	Sd RockRollD St	Dr	Snare
3199	Sd RockRollD L	Dr	Snare
3200	Sd RockRollD R	Dr	Snare
3201	Sd LiveRoll St	Dr	Snare
3202	Sd LiveRoll L	Dr	Snare
3203	Sd LiveRoll R	Dr	Snare
3204	Sd Roll Mono	Dr	Snare
3205	Sd Brush Soft St	Dr	Snare
3206	Sd Brush Soft L	Dr	Snare
3207	Sd Brush Soft R	Dr	Snare
3208	Sd Brush Med St	Dr	Snare
3209	Sd Brush Med L	Dr	Snare
3210	Sd Brush Med R	Dr	Snare
3211	Sd Brush vari St	Dr	Snare
3212	Sd Brush vari L	Dr	Snare
3213	Sd Brush vari R	Dr	Snare
3214	Sd Closed Rim4 St	Dr	Snare
3215	Sd Closed Rim4 L	Dr	Snare
3216	Sd Closed Rim4 R	Dr	Snare
3217	Sd Brush Swir St	Dr	Snare
3218	Sd Brush Swir L	Dr	Snare
3219	Sd Brush Swir R	Dr	Snare
3220	Sd Brush SwirAtt St	Dr	Snare
3221	Sd Brush SwirAtt L	Dr	Snare
3222	Sd Brush SwirAtt R	Dr	Snare
3223	Sd OrchA 1-2 St	Dr	Snare
3224	Sd OrchA 1 St	Dr	Snare
3225	Sd OrchA 2 St	Dr	Snare
3226	Sd OrchA 1-2 L	Dr	Snare
3227	Sd OrchA 1-2 R	Dr	Snare
3228	Sd OrchA 1 L	Dr	Snare
3229	Sd OrchA 2 L	Dr	Snare
3230	Sd OrchA 1 R	Dr	Snare
3231	Sd OrchA 2 R	Dr	Snare
3232	Sd OrchB 1-2 St	Dr	Snare
3233	Sd OrchB 1 St	Dr	Snare
3234	Sd OrchB 2 St	Dr	Snare
3235	Sd OrchB 1-2 L	Dr	Snare
3236	Sd OrchB 1-2 R	Dr	Snare
3237	Sd OrchB 1 L	Dr	Snare
3238	Sd OrchB 2 L	Dr	Snare
3239	Sd OrchB 1 R	Dr	Snare

No.	Name	Main Category	Sub Category
3240	Sd OrchB 2 R	Dr	Snare
3241	Sd OrchC 1-4 St	Dr	Snare
3242	Sd OrchC 1-4 L	Dr	Snare
3243	Sd OrchC 1-4 R	Dr	Snare
3244	Sd OrchC 1 St	Dr	Snare
3245	Sd OrchC 1 L	Dr	Snare
3246	Sd OrchC 1 R	Dr	Snare
3247	Sd OrchC 2 St	Dr	Snare
3248	Sd OrchC 2 L	Dr	Snare
3249	Sd OrchC 2 R	Dr	Snare
3250	Sd OrchC 3 St	Dr	Snare
3251	Sd OrchC 3 L	Dr	Snare
3252	Sd OrchC 3 R	Dr	Snare
3253	Sd OrchC 4 St	Dr	Snare
3254	Sd OrchC 4 L	Dr	Snare
3255	Sd OrchC 4 R	Dr	Snare
3256	Sd Orch Roll St	Dr	Snare
3257	Sd Orch Roll L	Dr	Snare
3258	Sd Orch Roll R	Dr	Snare
3259	Sd Field 1-4 St	Dr	Snare
3260	Sd Field 1-4 L	Dr	Snare
3261	Sd Field 1-4 R	Dr	Snare
3262	Sd Field 1 St	Dr	Snare
3263	Sd Field 1 L	Dr	Snare
3264	Sd Field 1 R	Dr	Snare
3265	Sd Field 2 St	Dr	Snare
3266	Sd Field 2 L	Dr	Snare
3267	Sd Field 2 R	Dr	Snare
3268	Sd Field 3 St	Dr	Snare
3269	Sd Field 3 L	Dr	Snare
3270	Sd Field 3 R	Dr	Snare
3271	Sd Field 4 St	Dr	Snare
3272	Sd Field 4 L	Dr	Snare
3273	Sd Field 4 R	Dr	Snare
3274	Sd Elec1	Dr	Snare
3275	Sd Elec2	Dr	Snare
3276	Sd Elec3	Dr	Snare
3277	Sd Elec4	Dr	Snare
3278	Sd Elec5	Dr	Snare
3279	Sd Elec6	Dr	Snare
3280	Sd Elec7	Dr	Snare
3281	Sd Elec8	Dr	Snare
3282	Sd Elec9	Dr	Snare
3283	Sd Elec10	Dr	Snare
3284	Sd Elec11	Dr	Snare
3285	Sd Elec12	Dr	Snare
3286	Sd T9-1	Dr	Snare
3287	Sd T9-2	Dr	Snare
3288	Sd T9-3	Dr	Snare
3289	Sd T9-4	Dr	Snare
3290	Sd T9-5	Dr	Snare
3291	Sd T9Gate	Dr	Snare
3292	Sd T9Rim	Dr	Snare
3293	Sd T8-1	Dr	Snare
3294	Sd T8-2	Dr	Snare
3295	Sd T8-3	Dr	Snare
3296	Sd T8-4	Dr	Snare
3297	Sd T8-5	Dr	Snare
3298	Sd T8 Rim	Dr	Snare
3299	Sd RX11 A	Dr	Snare
3300	Sd RX11 B	Dr	Snare
3301	Sd AnSm	Dr	Snare
3302	Sd AnSm Rim	Dr	Snare
3303	Sd AnCR	Dr	Snare
3304	Sd AnCR Rim	Dr	Snare
3305	Sd Human1	Dr	Snare
3306	Sd Human2	Dr	Snare
3307	Sd Jungle1	Dr	Snare
3308	Sd Jungle2	Dr	Snare
3309	Sd Jungle3	Dr	Snare
3310	Sd JungleFX	Dr	Snare
3311	Sd D&B1	Dr	Snare
3312	Sd D&B2	Dr	Snare
3313	Sd D&B3	Dr	Snare
3314	Sd D&B4	Dr	Snare
3315	Sd R&B1	Dr	Snare
3316	Sd R&B1 Rim	Dr	Snare
3317	Sd R&B2	Dr	Snare
3318	Sd Hip1	Dr	Snare

No.	Name	Main Category	Sub Category
3319	Sd Hip2	Dr	Snare
3320	Sd Hip3	Dr	Snare
3321	Sd Hip Gate	Dr	Snare
3322	Sd Hip Rim1	Dr	Snare
3323	Sd Hip Rim2	Dr	Snare
3324	Sd Hip Rim3	Dr	Snare
3325	Sd Hip Rim4	Dr	Snare
3326	Sd Hip Rim5	Dr	Snare
3327	Sd Break1	Dr	Snare
3328	Sd Break2	Dr	Snare
3329	Sd Break3	Dr	Snare
3330	Sd Break Heavy	Dr	Snare
3331	Sd Break Roll	Dr	Snare
3332	Sd FX1	Dr	Snare
3333	Sd FX2	Dr	Snare
3334	Sd FX3	Dr	Snare
3335	Sd FX4	Dr	Snare
3336	Sd ClapAna	Dr	Snare
3337	Sd Dist	Dr	Snare
3338	Sd Cut	Dr	Snare
3339	Sd Garg H	Dr	Snare
3340	Sd Garg L	Dr	Snare
3341	Sd FM	Dr	Snare
3342	Sd FM Rim	Dr	Snare
3343	Sd Syn	Dr	Snare
3344	Sd Clappy	Dr	Snare
3345	Sd Timbr	Dr	Snare
3346	Sd Wood	Dr	Snare
3347	Sd Hammer	Dr	Snare
3348	Sd Lo-Fi	Dr	Snare
3349	Sd Rim SE	Dr	Snare
3350	Sd HipHop1	Dr	Snare
3351	Sd HipHop2	Dr	Snare
3352	Sd HipHop3	Dr	Snare
3353	Sd HipHop5	Dr	Snare
3354	Sd HipHop6	Dr	Snare
3355	Sd HipHop7	Dr	Snare
3356	Sd HipHop9	Dr	Snare
3357	Sd HipHop10	Dr	Snare
3358	Sd HipHop11	Dr	Snare
3359	Sd HipHop12	Dr	Snare
3360	Sd HipHop13	Dr	Snare
3361	Sd HipHop14	Dr	Snare
3362	Sd HipHop15	Dr	Snare
3363	Sd HipHop16	Dr	Snare
3364	Sd HipHop17	Dr	Snare
3365	Sd HipHop18	Dr	Snare
3366	Sd HipHop Rim1	Dr	Snare
3367	Sd HipHop Rim2	Dr	Snare
3368	Sd HipHop Rim3	Dr	Snare
3369	Sd HipHop Rim4	Dr	Snare
3370	Sd HipHop Rim5	Dr	Snare
3371	Sd HipHop Rim6	Dr	Snare
3372	HH Closed 1-4St	Dr	HiHat
3373	HH Closed 1St	Dr	HiHat
3374	HH Closed 2St	Dr	HiHat
3375	HH Closed 3St	Dr	HiHat
3376	HH Closed 4St	Dr	HiHat
3377	HH Closed 1-4L	Dr	HiHat
3378	HH Closed 1-4R	Dr	HiHat
3379	HH Closed 1L	Dr	HiHat
3380	HH Closed 2L	Dr	HiHat
3381	HH Closed 3L	Dr	HiHat
3382	HH Closed 4L	Dr	HiHat
3383	HH Closed 1R	Dr	HiHat
3384	HH Closed 2R	Dr	HiHat
3385	HH Closed 3R	Dr	HiHat
3386	HH Closed 4R	Dr	HiHat
3387	HH Closed 1-4RL	Dr	HiHat
3388	HH Closed 1RL	Dr	HiHat
3389	HH Closed 2RL	Dr	HiHat
3390	HH Closed 3RL	Dr	HiHat
3391	HH Closed 4RL	Dr	HiHat
3392	HH Pedal 1-3St	Dr	HiHat
3393	HH Pedal 1 St	Dr	HiHat
3394	HH Pedal 2 St	Dr	HiHat
3395	HH Pedal 3 St	Dr	HiHat
3396	HH Pedal 1-3 L	Dr	HiHat
3397	HH Pedal 1-3 R	Dr	HiHat

No.	Name	Main Category	Sub Category
3398	HH Pedal 1 L	Dr	HiHat
3399	HH Pedal 2 L	Dr	HiHat
3400	HH Pedal 3 L	Dr	HiHat
3401	HH Pedal 1 R	Dr	HiHat
3402	HH Pedal 2 R	Dr	HiHat
3403	HH Pedal 3 R	Dr	HiHat
3404	HH Pedal 1-3RL	Dr	HiHat
3405	HH Pedal 1 RL	Dr	HiHat
3406	HH Pedal 2 RL	Dr	HiHat
3407	HH Pedal 3 RL	Dr	HiHat
3408	HH Open 1-2St	Dr	HiHat
3409	HH Open 1St	Dr	HiHat
3410	HH Open 2St	Dr	HiHat
3411	HH Open 1-2L	Dr	HiHat
3412	HH Open 1-2R	Dr	HiHat
3413	HH Open 1L	Dr	HiHat
3414	HH Open 2L	Dr	HiHat
3415	HH Open 1R	Dr	HiHat
3416	HH Open 2R	Dr	HiHat
3417	HH Open 1-2RL	Dr	HiHat
3418	HH Open 1RL	Dr	HiHat
3419	HH Open 2RL	Dr	HiHat
3420	HH Closed Foot St	Dr	HiHat
3421	HH Closed Foot L	Dr	HiHat
3422	HH Closed Foot R	Dr	HiHat
3423	HH Closed Foot RL	Dr	HiHat
3424	HH Half Open2 St	Dr	HiHat
3425	HH Half Open2 L	Dr	HiHat
3426	HH Half Open2 R	Dr	HiHat
3427	HH Half Open2 RL	Dr	HiHat
3428	HH Open2 St	Dr	HiHat
3429	HH Open2 L	Dr	HiHat
3430	HH Open2 R	Dr	HiHat
3431	HH Open2 RL	Dr	HiHat
3432	HH Closed Rock Sw St	Dr	HiHat
3433	HH Closed Rock Sw RL	Dr	HiHat
3434	HH Closed Rock S St	Dr	HiHat
3435	HH Closed Rock S RL	Dr	HiHat
3436	HH Closed Rock H St	Dr	HiHat
3437	HH Closed Rock H RL	Dr	HiHat
3438	HH Closed Rock Sw L	Dr	HiHat
3439	HH Closed Rock Sw R	Dr	HiHat
3440	HH Closed Rock S L	Dr	HiHat
3441	HH Closed Rock S R	Dr	HiHat
3442	HH Closed Rock H L	Dr	HiHat
3443	HH Closed Rock H R	Dr	HiHat
3444	HH Pedal Rock Sw St	Dr	HiHat
3445	HH Pedal Rock Sw RL	Dr	HiHat
3446	HH Pedal Rock Sw L	Dr	HiHat
3447	HH Pedal Rock Sw R	Dr	HiHat
3448	HH Closed Rock 2St	Dr	HiHat
3449	HH Closed Rock 2L	Dr	HiHat
3450	HH Closed Rock 2R	Dr	HiHat
3451	HH Closed Rock 2RL	Dr	HiHat
3452	HH Pedal Rock St	Dr	HiHat
3453	HH Pedal Rock L	Dr	HiHat
3454	HH Pedal Rock R	Dr	HiHat
3455	HH Pedal Rock RL	Dr	HiHat
3456	HH Open Rock Sw St	Dr	HiHat
3457	HH Open Rock Sw RL	Dr	HiHat
3458	HH Open Rock St	Dr	HiHat
3459	HH Open Rock RL	Dr	HiHat
3460	HH Half Open Rock St	Dr	HiHat
3461	HH Open Rock Sw L	Dr	HiHat
3462	HH Open Rock Sw R	Dr	HiHat
3463	HH Open Rock L	Dr	HiHat
3464	HH Open Rock R	Dr	HiHat
3465	HH Half Open Rock L	Dr	HiHat
3466	HH Half Open Rock R	Dr	HiHat
3467	HH Half Open Rock RL	Dr	HiHat
3468	HH Closed Mono	Dr	HiHat
3469	HH Open Mono	Dr	HiHat
3470	HH Pedal Mono	Dr	HiHat
3471	HH Power ClTip 1-4St	Dr	HiHat
3472	HH Power ClTip 1-4L	Dr	HiHat
3473	HH Power ClTip 1-4R	Dr	HiHat
3474	HH Power ClTip 1-4RL	Dr	HiHat
3475	HH Power ClTip 1St	Dr	HiHat
3476	HH Power ClTip 1L	Dr	HiHat

No.	Name	Main Category	Sub Category
3477	HH Power ClTip 1R	Dr	HiHat
3478	HH Power ClTip 1RL	Dr	HiHat
3479	HH Power ClTip 2St	Dr	HiHat
3480	HH Power ClTip 2L	Dr	HiHat
3481	HH Power ClTip 2R	Dr	HiHat
3482	HH Power ClTip 2RL	Dr	HiHat
3483	HH Power ClTip 3St	Dr	HiHat
3484	HH Power ClTip 3L	Dr	HiHat
3485	HH Power ClTip 3R	Dr	HiHat
3486	HH Power ClTip 3RL	Dr	HiHat
3487	HH Power ClTip 4St	Dr	HiHat
3488	HH Power ClTip 4L	Dr	HiHat
3489	HH Power ClTip 4R	Dr	HiHat
3490	HH Power ClTip 4RL	Dr	HiHat
3491	HH Power ClEgde1-4St	Dr	HiHat
3492	HH Power ClEgde1-4L	Dr	HiHat
3493	HH Power ClEgde1-4R	Dr	HiHat
3494	HH Power ClEgde1-4RL	Dr	HiHat
3495	HH Power ClEgde 1St	Dr	HiHat
3496	HH Power ClEgde 1L	Dr	HiHat
3497	HH Power ClEgde 1R	Dr	HiHat
3498	HH Power ClEgde 1RL	Dr	HiHat
3499	HH Power ClEgde 2St	Dr	HiHat
3500	HH Power ClEgde 2L	Dr	HiHat
3501	HH Power ClEgde 2R	Dr	HiHat
3502	HH Power ClEgde 2RL	Dr	HiHat
3503	HH Power ClEgde 3St	Dr	HiHat
3504	HH Power ClEgde 3L	Dr	HiHat
3505	HH Power ClEgde 3R	Dr	HiHat
3506	HH Power ClEgde 3RL	Dr	HiHat
3507	HH Power ClEgde 4St	Dr	HiHat
3508	HH Power ClEgde 4L	Dr	HiHat
3509	HH Power ClEgde 4R	Dr	HiHat
3510	HH Power ClEgde 4RL	Dr	HiHat
3511	HH Power ClPedal St	Dr	HiHat
3512	HH Power ClPedal L	Dr	HiHat
3513	HH Power ClPedal R	Dr	HiHat
3514	HH Power ClPedal RL	Dr	HiHat
3515	HH Power Open EdgeSt	Dr	HiHat
3516	HH Power Open EdgeL	Dr	HiHat
3517	HH Power Open EdgeR	Dr	HiHat
3518	HH Power Open EdgeRL	Dr	HiHat
3519	HH Dark Closed 1-4St	Dr	HiHat
3520	HH Dark Closed 1-4 L	Dr	HiHat
3521	HH Dark Closed 1-4 R	Dr	HiHat
3522	HH Dark Closed 1-4RL	Dr	HiHat
3523	HH Dark Closed 1 St	Dr	HiHat
3524	HH Dark Closed 1 L	Dr	HiHat
3525	HH Dark Closed 1 R	Dr	HiHat
3526	HH Dark Closed 1 RL	Dr	HiHat
3527	HH Dark Closed 2 St	Dr	HiHat
3528	HH Dark Closed 2 L	Dr	HiHat
3529	HH Dark Closed 2 R	Dr	HiHat
3530	HH Dark Closed 2 RL	Dr	HiHat
3531	HH Dark Closed 3 St	Dr	HiHat
3532	HH Dark Closed 3 L	Dr	HiHat
3533	HH Dark Closed 3 R	Dr	HiHat
3534	HH Dark Closed 3 RL	Dr	HiHat
3535	HH Dark Closed 4 St	Dr	HiHat
3536	HH Dark Closed 4 L	Dr	HiHat
3537	HH Dark Closed 4 R	Dr	HiHat
3538	HH Dark Closed 4 RL	Dr	HiHat
3539	HH Dark Pedal 1-2 St	Dr	HiHat
3540	HH Dark Pedal 1-2 L	Dr	HiHat
3541	HH Dark Pedal 1-2 R	Dr	HiHat
3542	HH Dark Pedal 1-2 RL	Dr	HiHat
3543	HH Dark Pedal 1 St	Dr	HiHat
3544	HH Dark Pedal 1 L	Dr	HiHat
3545	HH Dark Pedal 1 R	Dr	HiHat
3546	HH Dark Pedal 1 RL	Dr	HiHat
3547	HH Dark Pedal 2 St	Dr	HiHat
3548	HH Dark Pedal 2 L	Dr	HiHat
3549	HH Dark Pedal 2 R	Dr	HiHat
3550	HH Dark Pedal 2 RL	Dr	HiHat
3551	HH Dark Open 1-2 St	Dr	HiHat
3552	HH Dark Open 1-2 L	Dr	HiHat
3553	HH Dark Open 1-2 R	Dr	HiHat
3554	HH Dark Open 1-2 RL	Dr	HiHat
3555	HH Dark Open 1 St	Dr	HiHat

No.	Name	Main Category	Sub Category
3556	HH Dark Open 1 L	Dr	HiHat
3557	HH Dark Open 1 R	Dr	HiHat
3558	HH Dark Open 1 RL	Dr	HiHat
3559	HH Dark Open 2 St	Dr	HiHat
3560	HH Dark Open 2 L	Dr	HiHat
3561	HH Dark Open 2 R	Dr	HiHat
3562	HH Dark Open 2 RL	Dr	HiHat
3563	HH NJz Closed 1-4 St	Dr	HiHat
3564	HH NJz Closed 1-4 L	Dr	HiHat
3565	HH NJz Closed 1-4 R	Dr	HiHat
3566	HH NJz Closed 1-4 RL	Dr	HiHat
3567	HH NJz Closed 1 St	Dr	HiHat
3568	HH NJz Closed 1 L	Dr	HiHat
3569	HH NJz Closed 1 R	Dr	HiHat
3570	HH NJz Closed 1 RL	Dr	HiHat
3571	HH NJz Closed 2 St	Dr	HiHat
3572	HH NJz Closed 2 L	Dr	HiHat
3573	HH NJz Closed 2 R	Dr	HiHat
3574	HH NJz Closed 2 RL	Dr	HiHat
3575	HH NJz Closed 3 St	Dr	HiHat
3576	HH NJz Closed 3 L	Dr	HiHat
3577	HH NJz Closed 3 R	Dr	HiHat
3578	HH NJz Closed 3 RL	Dr	HiHat
3579	HH NJz Closed 4 St	Dr	HiHat
3580	HH NJz Closed 4 L	Dr	HiHat
3581	HH NJz Closed 4 R	Dr	HiHat
3582	HH NJz Closed 4 RL	Dr	HiHat
3583	HH NJz Pedal 1-2 St	Dr	HiHat
3584	HH NJz Pedal 1-2 L	Dr	HiHat
3585	HH NJz Pedal 1-2 R	Dr	HiHat
3586	HH NJz Pedal 1-2 RL	Dr	HiHat
3587	HH NJz Pedal 1 St	Dr	HiHat
3588	HH NJz Pedal 1 L	Dr	HiHat
3589	HH NJz Pedal 1 R	Dr	HiHat
3590	HH NJz Pedal 1 RL	Dr	HiHat
3591	HH NJz Pedal 2 St	Dr	HiHat
3592	HH NJz Pedal 2 L	Dr	HiHat
3593	HH NJz Pedal 2 R	Dr	HiHat
3594	HH NJz Pedal 2 RL	Dr	HiHat
3595	HH NJz Open 1-2 St	Dr	HiHat
3596	HH NJz Open 1-2 L	Dr	HiHat
3597	HH NJz Open 1-2 R	Dr	HiHat
3598	HH NJz Open 1-2 RL	Dr	HiHat
3599	HH NJz Open 1 St	Dr	HiHat
3600	HH NJz Open 1 L	Dr	HiHat
3601	HH NJz Open 1 R	Dr	HiHat
3602	HH NJz Open 1 RL	Dr	HiHat
3603	HH NJz Open 2 St	Dr	HiHat
3604	HH NJz Open 2 L	Dr	HiHat
3605	HH NJz Open 2 R	Dr	HiHat
3606	HH NJz Open 2 RL	Dr	HiHat
3607	HH Brush Closed	Dr	HiHat
3608	HH Brush Open	Dr	HiHat
3609	HH Brush Pedal	Dr	HiHat
3610	HH Closed T9	Dr	HiHat
3611	HH Open T9	Dr	HiHat
3612	HH Closed T8-1	Dr	HiHat
3613	HH Open T8-1	Dr	HiHat
3614	HH Closed T8-2	Dr	HiHat
3615	HH Open T8-2	Dr	HiHat
3616	HH Closed RX5	Dr	HiHat
3617	HH Closed RX11	Dr	HiHat
3618	HH Open RX11	Dr	HiHat
3619	HH Closed AnCR	Dr	HiHat
3620	HH Open AnCR	Dr	HiHat
3621	HH Closed Break	Dr	HiHat
3622	HH Pedal Break	Dr	HiHat
3623	HH Closed D&B	Dr	HiHat
3624	HH Pedal D&B	Dr	HiHat
3625	HH Open D&B	Dr	HiHat
3626	HH Reverse D&B	Dr	HiHat
3627	HH Closed Tek	Dr	HiHat
3628	HH Open Tek	Dr	HiHat
3629	HH Closed Hip	Dr	HiHat
3630	HH Pedal Hip	Dr	HiHat
3631	HH Open Hip	Dr	HiHat
3632	HH Closed Lo-Fi	Dr	HiHat
3633	HH Open Lo-Fi	Dr	HiHat
3634	HH Closed Syn	Dr	HiHat

No.	Name	Main Category	Sub Category
3635	HH Open Syn	Dr	HiHat
3636	HH Closed FX	Dr	HiHat
3637	HH Open FX	Dr	HiHat
3638	HH Open Human	Dr	HiHat
3639	Tom Hi St	Dr	Tom
3640	Tom Hi L	Dr	Tom
3641	Tom Hi R	Dr	Tom
3642	Tom Hi RL	Dr	Tom
3643	Tom Mid St	Dr	Tom
3644	Tom Mid L	Dr	Tom
3645	Tom Mid R	Dr	Tom
3646	Tom Mid RL	Dr	Tom
3647	Tom Low St	Dr	Tom
3648	Tom Low L	Dr	Tom
3649	Tom Low R	Dr	Tom
3650	Tom Low RL	Dr	Tom
3651	Tom Floor St	Dr	Tom
3652	Tom Floor L	Dr	Tom
3653	Tom Floor R	Dr	Tom
3654	Tom Floor RL	Dr	Tom
3655	Tom Rock Hi St	Dr	Tom
3656	Tom Rock Hi L	Dr	Tom
3657	Tom Rock Hi R	Dr	Tom
3658	Tom Rock Hi RL	Dr	Tom
3659	Tom Rock Mid St	Dr	Tom
3660	Tom Rock Mid L	Dr	Tom
3661	Tom Rock Mid R	Dr	Tom
3662	Tom Rock Mid RL	Dr	Tom
3663	Tom Rock Low St	Dr	Tom
3664	Tom Rock Low L	Dr	Tom
3665	Tom Rock Low R	Dr	Tom
3666	Tom Rock Low RL	Dr	Tom
3667	Tom Power01 1-2St	Dr	Tom
3668	Tom Power01 1-2L	Dr	Tom
3669	Tom Power01 1-2R	Dr	Tom
3670	Tom Power01 1-2RL	Dr	Tom
3671	Tom Power01 1St	Dr	Tom
3672	Tom Power01 1L	Dr	Tom
3673	Tom Power01 1R	Dr	Tom
3674	Tom Power01 1RL	Dr	Tom
3675	Tom Power01 2St	Dr	Tom
3676	Tom Power01 2L	Dr	Tom
3677	Tom Power01 2R	Dr	Tom
3678	Tom Power01 2RL	Dr	Tom
3679	Tom Power03 1-2St	Dr	Tom
3680	Tom Power03 1-2L	Dr	Tom
3681	Tom Power03 1-2R	Dr	Tom
3682	Tom Power03 1-2RL	Dr	Tom
3683	Tom Power03 1St	Dr	Tom
3684	Tom Power03 1L	Dr	Tom
3685	Tom Power03 1R	Dr	Tom
3686	Tom Power03 1RL	Dr	Tom
3687	Tom Power03 2St	Dr	Tom
3688	Tom Power03 2L	Dr	Tom
3689	Tom Power03 2R	Dr	Tom
3690	Tom Power03 2RL	Dr	Tom
3691	Tom Power04 1-2St	Dr	Tom
3692	Tom Power04 1-2L	Dr	Tom
3693	Tom Power04 1-2R	Dr	Tom
3694	Tom Power04 1-2RL	Dr	Tom
3695	Tom Power04 1St	Dr	Tom
3696	Tom Power04 1L	Dr	Tom
3697	Tom Power04 1R	Dr	Tom
3698	Tom Power04 1RL	Dr	Tom
3699	Tom Power04 2St	Dr	Tom
3700	Tom Power04 2L	Dr	Tom
3701	Tom Power04 2R	Dr	Tom
3702	Tom Power04 2RL	Dr	Tom
3703	Tom Power05 1-2St	Dr	Tom
3704	Tom Power05 1-2L	Dr	Tom
3705	Tom Power05 1-2R	Dr	Tom
3706	Tom Power05 1-2RL	Dr	Tom
3707	Tom Power05 1St	Dr	Tom
3708	Tom Power05 1L	Dr	Tom
3709	Tom Power05 1R	Dr	Tom
3710	Tom Power05 1RL	Dr	Tom
3711	Tom Power05 2St	Dr	Tom
3712	Tom Power05 2L	Dr	Tom
3713	Tom Power05 2R	Dr	Tom

No.	Name	Main Category	Sub Category
3714	Tom Power05 2RL	Dr	Tom
3715	Tom Maple Hi 1-2 St	Dr	Tom
3716	Tom Maple Hi 1-2 L	Dr	Tom
3717	Tom Maple Hi 1-2 R	Dr	Tom
3718	Tom Maple Hi 1-2 RL	Dr	Tom
3719	Tom Maple Hi 1 St	Dr	Tom
3720	Tom Maple Hi 1 L	Dr	Tom
3721	Tom Maple Hi 1 R	Dr	Tom
3722	Tom Maple Hi 1 RL	Dr	Tom
3723	Tom Maple Hi 2 St	Dr	Tom
3724	Tom Maple Hi 2 L	Dr	Tom
3725	Tom Maple Hi 2 R	Dr	Tom
3726	Tom Maple Hi 2 RL	Dr	Tom
3727	Tom Maple Mid 1-2 St	Dr	Tom
3728	Tom Maple Mid 1-2 L	Dr	Tom
3729	Tom Maple Mid 1-2 R	Dr	Tom
3730	Tom Maple Mid 1-2 RL	Dr	Tom
3731	Tom Maple Mid 1 St	Dr	Tom
3732	Tom Maple Mid 1 L	Dr	Tom
3733	Tom Maple Mid 1 R	Dr	Tom
3734	Tom Maple Mid 1 RL	Dr	Tom
3735	Tom Maple Mid 2 St	Dr	Tom
3736	Tom Maple Mid 2 L	Dr	Tom
3737	Tom Maple Mid 2 R	Dr	Tom
3738	Tom Maple Mid 2 RL	Dr	Tom
3739	Tom Maple Flr 1-2 St	Dr	Tom
3740	Tom Maple Flr 1-2 L	Dr	Tom
3741	Tom Maple Flr 1-2 R	Dr	Tom
3742	Tom Maple Flr 1-2 RL	Dr	Tom
3743	Tom Maple Flr 1 St	Dr	Tom
3744	Tom Maple Flr 1 L	Dr	Tom
3745	Tom Maple Flr 1 R	Dr	Tom
3746	Tom Maple Flr 1 RL	Dr	Tom
3747	Tom Maple Flr 2 St	Dr	Tom
3748	Tom Maple Flr 2 L	Dr	Tom
3749	Tom Maple Flr 2 R	Dr	Tom
3750	Tom Maple Flr 2 RL	Dr	Tom
3751	Tom Oak Hi 1-2 St	Dr	Tom
3752	Tom Oak Hi 1-2 L	Dr	Tom
3753	Tom Oak Hi 1-2 R	Dr	Tom
3754	Tom Oak Hi 1-2 RL	Dr	Tom
3755	Tom Oak Hi 1 St	Dr	Tom
3756	Tom Oak Hi 1 L	Dr	Tom
3757	Tom Oak Hi 1 R	Dr	Tom
3758	Tom Oak Hi 1 RL	Dr	Tom
3759	Tom Oak Hi 2 St	Dr	Tom
3760	Tom Oak Hi 2 L	Dr	Tom
3761	Tom Oak Hi 2 R	Dr	Tom
3762	Tom Oak Hi 2 RL	Dr	Tom
3763	Tom Oak Mid 1-2 St	Dr	Tom
3764	Tom Oak Mid 1-2 L	Dr	Tom
3765	Tom Oak Mid 1-2 R	Dr	Tom
3766	Tom Oak Mid 1-2 RL	Dr	Tom
3767	Tom Oak Mid 1 St	Dr	Tom
3768	Tom Oak Mid 1 L	Dr	Tom
3769	Tom Oak Mid 1 R	Dr	Tom
3770	Tom Oak Mid 1 RL	Dr	Tom
3771	Tom Oak Mid 2 St	Dr	Tom
3772	Tom Oak Mid 2 L	Dr	Tom
3773	Tom Oak Mid 2 R	Dr	Tom
3774	Tom Oak Mid 2 RL	Dr	Tom
3775	Tom Oak Floor 1-2 St	Dr	Tom
3776	Tom Oak Floor 1-2 L	Dr	Tom
3777	Tom Oak Floor 1-2 R	Dr	Tom
3778	Tom Oak Floor 1-2 RL	Dr	Tom
3779	Tom Oak Floor 1 St	Dr	Tom
3780	Tom Oak Floor 1 L	Dr	Tom
3781	Tom Oak Floor 1 R	Dr	Tom
3782	Tom Oak Floor 1 RL	Dr	Tom
3783	Tom Oak Floor 2 St	Dr	Tom
3784	Tom Oak Floor 2 L	Dr	Tom
3785	Tom Oak Floor 2 R	Dr	Tom
3786	Tom Oak Floor 2 RL	Dr	Tom
3787	Tom NJz Mid 1-2 St	Dr	Tom
3788	Tom NJz Mid 1-2 L	Dr	Tom
3789	Tom NJz Mid 1-2 R	Dr	Tom
3790	Tom NJz Mid 1-2 RL	Dr	Tom
3791	Tom NJz Mid 1 St	Dr	Tom
3792	Tom NJz Mid 1 L	Dr	Tom

No.	Name	Main Category	Sub Category
3793	Tom NJz Mid 1 R	Dr	Tom
3794	Tom NJz Mid 1 RL	Dr	Tom
3795	Tom NJz Mid 2 St	Dr	Tom
3796	Tom NJz Mid 2 L	Dr	Tom
3797	Tom NJz Mid 2 R	Dr	Tom
3798	Tom NJz Mid 2 RL	Dr	Tom
3799	Tom NJz Low 1-2 St	Dr	Tom
3800	Tom NJz Low 1-2 L	Dr	Tom
3801	Tom NJz Low 1-2 R	Dr	Tom
3802	Tom NJz Low 1-2 RL	Dr	Tom
3803	Tom NJz Low 1 St	Dr	Tom
3804	Tom NJz Low 1 L	Dr	Tom
3805	Tom NJz Low 1 R	Dr	Tom
3806	Tom NJz Low 1 RL	Dr	Tom
3807	Tom NJz Low 2 St	Dr	Tom
3808	Tom NJz Low 2 L	Dr	Tom
3809	Tom NJz Low 2 R	Dr	Tom
3810	Tom NJz Low 2 RL	Dr	Tom
3811	Tom NJz Floor 1-2 St	Dr	Tom
3812	Tom NJz Floor 1-2 L	Dr	Tom
3813	Tom NJz Floor 1-2 R	Dr	Tom
3814	Tom NJz Floor 1-2 RL	Dr	Tom
3815	Tom NJz Floor 1 St	Dr	Tom
3816	Tom NJz Floor 1 L	Dr	Tom
3817	Tom NJz Floor 1 R	Dr	Tom
3818	Tom NJz Floor 1 RL	Dr	Tom
3819	Tom NJz Floor 2 St	Dr	Tom
3820	Tom NJz Floor 2 L	Dr	Tom
3821	Tom NJz Floor 2 R	Dr	Tom
3822	Tom NJz Floor 2 RL	Dr	Tom
3823	Tom Brush Hi St	Dr	Tom
3824	Tom Brush Hi L	Dr	Tom
3825	Tom Brush Hi R	Dr	Tom
3826	Tom Brush Hi RL	Dr	Tom
3827	Tom Brush Mid St	Dr	Tom
3828	Tom Brush Mid L	Dr	Tom
3829	Tom Brush Mid R	Dr	Tom
3830	Tom Brush Mid RL	Dr	Tom
3831	Tom Brush Low St	Dr	Tom
3832	Tom Brush Low L	Dr	Tom
3833	Tom Brush Low R	Dr	Tom
3834	Tom Brush Low RL	Dr	Tom
3835	Tom Brush Floor St	Dr	Tom
3836	Tom Brush Floor L	Dr	Tom
3837	Tom Brush Floor R	Dr	Tom
3838	Tom Brush Floor RL	Dr	Tom
3839	Tom Mono Hi	Dr	Tom
3840	Tom Mono Lo	Dr	Tom
3841	Tom Dry Hi	Dr	Tom
3842	Tom Dry Lo	Dr	Tom
3843	Rotary Tom Hi 1-2	Dr	Tom
3844	Rotary Tom Hi 1	Dr	Tom
3845	Rotary Tom Hi 2	Dr	Tom
3846	Rotary Tom Mid 1-2	Dr	Tom
3847	Rotary Tom Mid 1	Dr	Tom
3848	Rotary Tom Mid 2	Dr	Tom
3849	Rotary Tom Lo 1-2	Dr	Tom
3850	Rotary Tom Lo 1	Dr	Tom
3851	Rotary Tom Lo 2	Dr	Tom
3852	Tom Ambience Hi	Dr	Tom
3853	Tom Ambience Lo	Dr	Tom
3854	Tom T9 Hi	Dr	Tom
3855	Tom T9 Lo	Dr	Tom
3856	Tom T8	Dr	Tom
3857	Tom Syn1	Dr	Tom
3858	Tom Syn2	Dr	Tom
3859	Tom AnSm	Dr	Tom
3860	Tom Dist Hi	Dr	Tom
3861	Tom Dist Lo	Dr	Tom
3862	Tom RX11	Dr	Tom
3863	Crash1 St	Dr	Cymbl
3864	Crash1 L	Dr	Cymbl
3865	Crash1 R	Dr	Cymbl
3866	Crash1 RL	Dr	Cymbl
3867	Crash2 St	Dr	Cymbl
3868	Crash2 L	Dr	Cymbl
3869	Crash2 R	Dr	Cymbl
3870	Crash2 RL	Dr	Cymbl
3871	Crash3	Dr	Cymbl

No.	Name	Main Category	Sub Category
3872	Crash4	Dr	Cymbl
3873	Crash Brite St	Dr	Cymbl
3874	Crash Brite L	Dr	Cymbl
3875	Crash Brite R	Dr	Cymbl
3876	Crash Brite RL	Dr	Cymbl
3877	Crash Dark St	Dr	Cymbl
3878	Crash Dark L	Dr	Cymbl
3879	Crash Dark R	Dr	Cymbl
3880	Crash Dark RL	Dr	Cymbl
3881	Crash NJzA St	Dr	Cymbl
3882	Crash NJzA L	Dr	Cymbl
3883	Crash NJzA R	Dr	Cymbl
3884	Crash NJzA RL	Dr	Cymbl
3885	Crash NJzB St	Dr	Cymbl
3886	Crash NJzB L	Dr	Cymbl
3887	Crash NJzB R	Dr	Cymbl
3888	Crash NJzB RL	Dr	Cymbl
3889	Crash Brush1 St	Dr	Cymbl
3890	Crash Brush1 L	Dr	Cymbl
3891	Crash Brush1 R	Dr	Cymbl
3892	Crash Brush1 RL	Dr	Cymbl
3893	Crash Brush Cup St	Dr	Cymbl
3894	Crash Brush Cup L	Dr	Cymbl
3895	Crash Brush Cup R	Dr	Cymbl
3896	Crash Brush Cup RL	Dr	Cymbl
3897	Crash Brush2 St	Dr	Cymbl
3898	Crash Brush2 L	Dr	Cymbl
3899	Crash Brush2 R	Dr	Cymbl
3900	Crash Brush2 RL	Dr	Cymbl
3901	Hand Cymbal Open St	Dr	Cymbl
3902	Hand Cymbal Open L	Dr	Cymbl
3903	Hand Cymbal Open R	Dr	Cymbl
3904	Hand Cymbal Mute St	Dr	Cymbl
3905	Hand Cymbal Mute L	Dr	Cymbl
3906	Hand Cymbal Mute R	Dr	Cymbl
3907	Ride1 St	Dr	Cymbl
3908	Ride1 L	Dr	Cymbl
3909	Ride1 R	Dr	Cymbl
3910	Ride1 RL	Dr	Cymbl
3911	Ride2 St	Dr	Cymbl
3912	Ride2 L	Dr	Cymbl
3913	Ride2 R	Dr	Cymbl
3914	Ride2 RL	Dr	Cymbl
3915	Ride Brite St	Dr	Cymbl
3916	Ride Brite L	Dr	Cymbl
3917	Ride Brite R	Dr	Cymbl
3918	Ride Brite RL	Dr	Cymbl
3919	Ride Brite Cup St	Dr	Cymbl
3920	Ride Brite Cup L	Dr	Cymbl
3921	Ride Brite Cup R	Dr	Cymbl
3922	Ride Brite Cup RL	Dr	Cymbl
3923	Ride Warm St	Dr	Cymbl
3924	Ride Warm L	Dr	Cymbl
3925	Ride Warm R	Dr	Cymbl
3926	Ride Warm RL	Dr	Cymbl
3927	Ride NJz St	Dr	Cymbl
3928	Ride NJz L	Dr	Cymbl
3929	Ride NJz R	Dr	Cymbl
3930	Ride NJz RL	Dr	Cymbl
3931	Ride NJz Cup St	Dr	Cymbl
3932	Ride NJz Cup L	Dr	Cymbl
3933	Ride NJz Cup R	Dr	Cymbl
3934	Ride NJz Cup RL	Dr	Cymbl
3935	Ride Cup1 St	Dr	Cymbl
3936	Ride Cup1 L	Dr	Cymbl
3937	Ride Cup1 R	Dr	Cymbl
3938	Ride Cup1 RL	Dr	Cymbl
3939	Ride Brush1 St	Dr	Cymbl
3940	Ride Brush1 L	Dr	Cymbl
3941	Ride Brush1 R	Dr	Cymbl
3942	Ride Brush1 RL	Dr	Cymbl
3943	Ride Brush2 St	Dr	Cymbl
3944	Ride Brush2 L	Dr	Cymbl
3945	Ride Brush2 R	Dr	Cymbl
3946	Ride Brush2 RL	Dr	Cymbl
3947	Ride Cup2 St	Dr	Cymbl
3948	Ride Cup2 L	Dr	Cymbl
3949	Ride Cup2 R	Dr	Cymbl
3950	Ride Cup2 RL	Dr	Cymbl

No.	Name	Main Category	Sub Category
3951	Ride Mono	Dr	Cymbl
3952	Ride Cup Mono	Dr	Cymbl
3953	Ride Cup Mono2	Dr	Cymbl
3954	China1 St	Dr	Cymbl
3955	China1 L	Dr	Cymbl
3956	China1 R	Dr	Cymbl
3957	China1 RL	Dr	Cymbl
3958	China2	Dr	Cymbl
3959	China3 St	Dr	Cymbl
3960	China3 L	Dr	Cymbl
3961	China3 R	Dr	Cymbl
3962	China3 RL	Dr	Cymbl
3963	Splash1 St	Dr	Cymbl
3964	Splash1 L	Dr	Cymbl
3965	Splash1 R	Dr	Cymbl
3966	Splash1 RL	Dr	Cymbl
3967	Splash2 St	Dr	Cymbl
3968	Splash2 L	Dr	Cymbl
3969	Splash2 R	Dr	Cymbl
3970	Splash2 RL	Dr	Cymbl
3971	Crash T9	Dr	Cymbl
3972	Crash T8	Dr	Cymbl
3973	Crash Syn	Dr	Cymbl
3974	Crash RX11	Dr	Cymbl
3975	Ride T9	Dr	Cymbl
3976	Ride RX11	Dr	Cymbl
3977	Reverse Cymbal	Dr	Cymbl

Arpeggio Type List

General Voice types which are most suitable for the respective Arpeggio Types are listed in the “Voice Type” column. Among these, the ones in quotation marks are specific Voices actually provided on the MOTIF XF. Also, for Arpeggio Types belonging to the “Cntr” Category (pages 91 and 92), information about data (Control Change or Pitch Bend) programmed into the respective Arpeggio Types is listed in the “Voice Type” column. For Arpeggio Types programmed with Control Change data, the Control Change numbers are listed accordingly. For Arpeggio Types programmed with Pitch Bend data, Pitch Bend Range information is listed accordingly.

Main Category	Sub Category	ARP No.	ARP Name	Time Signature	Length	Original Tempo	Accent	Random SFX	Voice Type
ApKb	Rock	1	MA_70s Rock _ES	4 / 4	2	130			Acoustic Piano
ApKb	Rock	2	MB_70s Rock _ES	4 / 4	1	130			:
ApKb	Rock	3	MC_70s Rock	4 / 4	2	130			:
ApKb	Rock	4	MD_70s Rock	4 / 4	4	130			:
ApKb	Rock	5	FA_70s Rock	4 / 4	1	130			:
ApKb	Rock	6	FB_70s Rock _ES	4 / 4	1	130			:
ApKb	Rock	7	FC_70s Rock _ES	4 / 4	2	130			:
ApKb	Rock	8	MA_Rockn Pf	4 / 4	4	130			:
ApKb	Rock	9	MA_Rock & Roll _XS	4 / 4	4	172			:
ApKb	Rock	10	MB_Rock & Roll _XS	4 / 4	4	172			:
ApKb	Rock	11	MC_Rock & Roll _XS	4 / 4	4	172			:
ApKb	Rock	12	FA_Rock & Roll _XS	4 / 4	1	172			:
ApKb	Rock	13	FB_Rock & Roll _XS	4 / 4	1	172			:
ApKb	Rock	14	FC_Rock & Roll _XS	4 / 4	1	172			:
ApKb	Rock	15	BA_Rock & Roll _XS	4 / 4	1	172			:
ApKb	Rock	16	EA_Rock & Roll _XS	4 / 4	5	172			:
ApKb	Rock	17	EB_Rock & Roll _XS	4 / 4	6	172			:
ApKb	Rock	18	MA_ProgresRock2 _XS	4 / 4	4	120			Electric Piano
ApKb	Rock	19	MB_ProgresRock2 _XS	4 / 4	4	120			:
ApKb	Rock	20	MC_ProgresRock2 _XS	4 / 4	4	120			:
ApKb	Rock	21	FA_ProgresRock2 _XS	4 / 4	1	120			:
ApKb	Rock	22	FB_ProgresRock2 _XS	4 / 4	1	120			:
ApKb	Rock	23	FC_ProgresRock2 _XS	4 / 4	1	120			:
ApKb	Rock	24	BA_ProgresRock2 _XS	4 / 4	1	120			:
ApKb	Rock	25	MA_ProgresRock2 _ES	4 / 4	4	120			:
ApKb	Rock	26	MB_ProgresRock2 _ES	4 / 4	4	120			:
ApKb	Rock	27	MC_ProgresRock2 _ES	4 / 4	4	120			:
ApKb	Rock	28	FA_ProgresRock2 _ES	4 / 4	1	120			:
ApKb	Rock	29	FB_ProgresRock2 _ES	4 / 4	1	120			:
ApKb	Rock	30	FC_ProgresRock2 _ES	4 / 4	1	120			:
ApKb	Rock	31	BA_ProgresRock2 _ES	4 / 4	1	120			:
ApKb	PopRk	32	MA_Cool 8Beat _XS	4 / 4	2	100			:
ApKb	PopRk	33	MB_Cool 8Beat _XS	4 / 4	2	100			:
ApKb	PopRk	34	MC_Cool 8Beat _XS	4 / 4	2	100			:
ApKb	PopRk	35	FA_Cool 8Beat _XS	4 / 4	1	100			:
ApKb	PopRk	36	FB_Cool 8Beat _XS	4 / 4	1	100			:
ApKb	PopRk	37	FC_Cool 8Beat _XS	4 / 4	1	100			:
ApKb	PopRk	38	BA_Cool 8Beat _XS	4 / 4	1	100			:
ApKb	PopRk	39	EA_Cool 8Beat _XS	4 / 4	4	100			:
ApKb	PopRk	40	EB_Cool 8Beat _XS	4 / 4	4	100			:
ApKb	PopRk	41	MA_8Beat Basic _XS	4 / 4	4	120			:
ApKb	PopRk	42	MB_8Beat Basic _XS	4 / 4	4	120			:
ApKb	PopRk	43	MC_8Beat Basic _XS	4 / 4	4	120			:
ApKb	PopRk	44	FA_8Beat Basic _XS	4 / 4	1	120			:
ApKb	PopRk	45	FB_8Beat Basic _XS	4 / 4	1	120			:
ApKb	PopRk	46	FC_8Beat Basic _XS	4 / 4	1	120			:
ApKb	PopRk	47	BA_8Beat Basic _XS	4 / 4	1	120			:
ApKb	PopRk	48	MA_8Beat Basic _ES	4 / 4	4	120			:
ApKb	PopRk	49	MB_8Beat Basic _ES	4 / 4	4	120			:
ApKb	PopRk	50	MC_8Beat Basic _ES	4 / 4	4	120			:
ApKb	PopRk	51	FA_8Beat Basic _ES	4 / 4	1	120			:
ApKb	PopRk	52	FB_8Beat Basic _ES	4 / 4	1	120			:
ApKb	PopRk	53	FC_8Beat Basic _ES	4 / 4	1	120			:
ApKb	PopRk	54	BA_8Beat Basic _ES	4 / 4	1	120			:
ApKb	PopRk	55	MA_BritRockPop _XS	4 / 4	4	123			Acoustic Piano
ApKb	PopRk	56	MB_BritRockPop _XS	4 / 4	4	123			:
ApKb	PopRk	57	MC_BritRockPop _XS	4 / 4	4	123			:
ApKb	PopRk	58	FA_BritRockPop _XS	4 / 4	1	123			:
ApKb	PopRk	59	FB_BritRockPop _XS	4 / 4	1	123			:
ApKb	PopRk	60	FC_BritRockPop _XS	4 / 4	1	123			:
ApKb	PopRk	61	BA_BritRockPop _XS	4 / 4	1	123			:
ApKb	PopRk	62	EA_BritRockPop _XS	4 / 4	6	123			:
ApKb	PopRk	63	MA_60sVintagePop _XS	4 / 4	4	132			:
ApKb	PopRk	64	MB_60sVintagePop _XS	4 / 4	4	132			:
ApKb	PopRk	65	MC_60sVintagePop _XS	4 / 4	4	132			:
ApKb	PopRk	66	FA_60sVintagePop _XS	4 / 4	1	132			:
ApKb	PopRk	67	FB_60sVintagePop _XS	4 / 4	1	132			:
ApKb	PopRk	68	FC_60sVintagePop _XS	4 / 4	1	132			:
ApKb	PopRk	69	BA_60sVintagePop _XS	4 / 4	1	132			:
ApKb	PopRk	70	EA_60sVintagePop _XS	4 / 4	2	132			:
ApKb	PopRk	71	MA_60sChartSwing _XS	4 / 4	4	123			:
ApKb	PopRk	72	MB_60sChartSwing _XS	4 / 4	4	123			:
ApKb	PopRk	73	MC_60sChartSwing _XS	4 / 4	4	123			:
ApKb	PopRk	74	FA_60sChartSwing _XS	4 / 4	1	123			:
ApKb	PopRk	75	FB_60sChartSwing _XS	4 / 4	1	123			:
ApKb	PopRk	76	FC_60sChartSwing _XS	4 / 4	1	123			:
ApKb	PopRk	77	BA_60sChartSwing _XS	4 / 4	1	123			:
ApKb	PopRk	78	EA_60sChartSwing _XS	4 / 4	4	123			:
ApKb	PopRk	79	MA_16BeatBasic1 _XS	4 / 4	4	90			Electric Piano
ApKb	PopRk	80	MB_16BeatBasic1 _XS	4 / 4	4	90			:

Main Category	Sub Category	ARP No.	ARP Name	Time Signature	Length	Original Tempo	Accent	Random SFX	Voice Type
ApKb	PopRk	81	MC_16BeatBasic1 _XS	4 / 4	4	90			Electric Piano
ApKb	PopRk	82	FA_16BeatBasic1 _XS	4 / 4	1	90			:
ApKb	PopRk	83	FB_16BeatBasic1 _XS	4 / 4	1	90			:
ApKb	PopRk	84	FC_16BeatBasic1 _XS	4 / 4	1	90			:
ApKb	PopRk	85	BA_16BeatBasic1 _XS	4 / 4	1	90			:
ApKb	PopRk	86	MA_16BeatBasic1 _ES	4 / 4	4	90			:
ApKb	PopRk	87	MB_16BeatBasic1 _ES	4 / 4	4	90			:
ApKb	PopRk	88	MC_16BeatBasic1 _ES	4 / 4	4	90			:
ApKb	PopRk	89	FA_16BeatBasic1 _ES	4 / 4	1	90			:
ApKb	PopRk	90	FB_16BeatBasic1 _ES	4 / 4	1	90			:
ApKb	PopRk	91	FC_16BeatBasic1 _ES	4 / 4	1	90			:
ApKb	PopRk	92	BA_16BeatBasic1 _ES	4 / 4	1	90			:
ApKb	PopRk	93	MA_16BeatBasic2 _XS	4 / 4	4	77			:
ApKb	PopRk	94	MB_16BeatBasic2 _XS	4 / 4	4	77			:
ApKb	PopRk	95	MC_16BeatBasic2 _XS	4 / 4	4	77			:
ApKb	PopRk	96	FA_16BeatBasic2 _XS	4 / 4	1	77			:
ApKb	PopRk	97	FB_16BeatBasic2 _XS	4 / 4	1	77			:
ApKb	PopRk	98	FC_16BeatBasic2 _XS	4 / 4	1	77			:
ApKb	PopRk	99	BA_16BeatBasic2 _XS	4 / 4	1	77			:
ApKb	PopRk	100	MA_16BeatBasic2 _ES	4 / 4	4	77			:
ApKb	PopRk	101	MB_16BeatBasic2 _ES	4 / 4	4	77			:
ApKb	PopRk	102	MC_16BeatBasic2 _ES	4 / 4	4	77			:
ApKb	PopRk	103	FA_16BeatBasic2 _ES	4 / 4	1	77			:
ApKb	PopRk	104	FB_16BeatBasic2 _ES	4 / 4	1	77			:
ApKb	PopRk	105	FC_16BeatBasic2 _ES	4 / 4	1	77			:
ApKb	PopRk	106	BA_16BeatBasic2 _ES	4 / 4	1	77			:
ApKb	PopRk	107	MA_16Beat Pop 1 _XS	4 / 4	4	103			:
ApKb	PopRk	108	MB_16Beat Pop 1 _XS	4 / 4	4	103			:
ApKb	PopRk	109	MC_16Beat Pop 1 _XS	4 / 4	4	103			:
ApKb	PopRk	110	FA_16Beat Pop 1 _XS	4 / 4	1	103			:
ApKb	PopRk	111	FB_16Beat Pop 1 _XS	4 / 4	1	103			:
ApKb	PopRk	112	FC_16Beat Pop 1 _XS	4 / 4	1	103			:
ApKb	PopRk	113	BA_16Beat Pop 1 _XS	4 / 4	1	103			:
ApKb	PopRk	114	MA_16Beat Pop 1 _ES	4 / 4	4	103			:
ApKb	PopRk	115	MB_16Beat Pop 1 _ES	4 / 4	4	103			:
ApKb	PopRk	116	MC_16Beat Pop 1 _ES	4 / 4	4	103			:
ApKb	PopRk	117	FA_16Beat Pop 1 _ES	4 / 4	1	103			:
ApKb	PopRk	118	FB_16Beat Pop 1 _ES	4 / 4	1	103			:
ApKb	PopRk	119	FC_16Beat Pop 1 _ES	4 / 4	1	103			:
ApKb	PopRk	120	BA_16Beat Pop 1 _ES	4 / 4	1	103			:
ApKb	PopRk	121	MA_16Beat Pop 2 _XS	4 / 4	4	94			Acoustic Piano
ApKb	PopRk	122	MB_16Beat Pop 2 _XS	4 / 4	4	94			:
ApKb	PopRk	123	MC_16Beat Pop 2 _XS	4 / 4	4	94			:
ApKb	PopRk	124	FA_16Beat Pop 2 _XS	4 / 4	1	94			:
ApKb	PopRk	125	FB_16Beat Pop 2 _XS	4 / 4	1	94			:
ApKb	PopRk	126	FC_16Beat Pop 2 _XS	4 / 4	1	94			:
ApKb	PopRk	127	BA_16Beat Pop 2 _XS	4 / 4	1	94			:
ApKb	PopRk	128	MA_16Beat Pop 2 _ES	4 / 4	4	94			:
ApKb	PopRk	129	MB_16Beat Pop 2 _ES	4 / 4	4	94			:
ApKb	PopRk	130	MC_16Beat Pop 2 _ES	4 / 4	4	94			:
ApKb	PopRk	131	FA_16Beat Pop 2 _ES	4 / 4	1	94			:
ApKb	PopRk	132	FB_16Beat Pop 2 _ES	4 / 4	1	94			:
ApKb	PopRk	133	FC_16Beat Pop 2 _ES	4 / 4	1	94			:
ApKb	PopRk	134	BA_16Beat Pop 2 _ES	4 / 4	1	94			:
ApKb	PopRk	135	MC1_Piano Club	4 / 4	1	96			:
ApKb	PopRk	136	MD1_Piano Club	4 / 4	1	96			:
ApKb	PopRk	137	IA1_Piano Club	4 / 4	1	96			:
ApKb	PopRk	138	MD2_Piano Club	4 / 4	2	96			:
ApKb	PopRk	139	IA2_Piano Club	4 / 4	2	96			:
ApKb	PopRk	140	MC3_Piano Club	4 / 4	2	96			:
ApKb	PopRk	141	IA3_Piano Club	4 / 4	2	96			:
ApKb	PopRk	142	MB1_Analog Pop	4 / 4	2	93			Electric Piano
ApKb	PopRk	143	MC2_Analog Pop	4 / 4	2	93			:
ApKb	PopRk	144	IA2_Analog Pop	4 / 4	1	93			:
ApKb	PopRk	145	MA_6/8 Pop _XS	4 / 4	4	100			:
ApKb	PopRk	146	MB_6/8 Pop _XS	4 / 4	4	100			:
ApKb	PopRk	147	MC_6/8 Pop _XS	4 / 4	4	100			:
ApKb	PopRk	148	FA_6/8 Pop _XS	4 / 4	1	100			:
ApKb	PopRk	149	FB_6/8 Pop _XS	4 / 4	1	100			:
ApKb	PopRk	150	FC_6/8 Pop _XS	4 / 4	1	100			:
ApKb	PopRk	151	BA_6/8 Pop _XS	4 / 4	1	100			:
ApKb	PopRk	152	MA_6/8 Pop _ES	4 / 4	4	100			:
ApKb	PopRk	153	MB_6/8 Pop _ES	4 / 4	4	100			:
ApKb	PopRk	154	MC_6/8 Pop _ES	4 / 4	4	100			:
ApKb	PopRk	155	FA_6/8 Pop _ES	4 / 4	1	100			:
ApKb	PopRk	156	FB_6/8 Pop _ES	4 / 4	1	100			:
ApKb	PopRk	157	FC_6/8 Pop _ES	4 / 4	1	100			:
ApKb	PopRk	158	BA_6/8 Pop _ES	4 / 4	1	100			:
ApKb	Balad	159	MA_Unplugged 1 _XS	4 / 4	4	120			Acoustic Piano
ApKb	Balad	160	MB_Unplugged 1 _XS	4 / 4	4	120			:

Main Category	Sub Category	ARP No.	ARP Name	Time Signature	Length	Original Tempo	Accent	Random SFX	Voice Type
ApKb	Balad	161	MC_Unplugged 1 _XS	4 / 4	4	120			Acoustic Piano
ApKb	Balad	162	FA_Unplugged 1 _XS	4 / 4	1	120			:
ApKb	Balad	163	FB_Unplugged 1 _XS	4 / 4	1	120			:
ApKb	Balad	164	FC_Unplugged 1 _XS	4 / 4	1	120			:
ApKb	Balad	165	BA_Unplugged 1 _XS	4 / 4	1	120			:
ApKb	Balad	166	MA_Unplugged 3 _XS	4 / 4	4	113			:
ApKb	Balad	167	MB_Unplugged 3 _XS	4 / 4	4	113			:
ApKb	Balad	168	MC_Unplugged 3 _XS	4 / 4	4	113			:
ApKb	Balad	169	FA_Unplugged 3 _XS	4 / 4	1	113			:
ApKb	Balad	170	FB_Unplugged 3 _XS	4 / 4	1	113			:
ApKb	Balad	171	FC_Unplugged 3 _XS	4 / 4	1	113			:
ApKb	Balad	172	BA_Unplugged 3 _XS	4 / 4	1	113			:
ApKb	Balad	173	MA_Unplugged 3 _ES	4 / 4	4	113			:
ApKb	Balad	174	MB_Unplugged 3 _ES	4 / 4	4	113			:
ApKb	Balad	175	MC_Unplugged 3 _ES	4 / 4	4	113			:
ApKb	Balad	176	FA_Unplugged 3 _ES	4 / 4	1	113			:
ApKb	Balad	177	FB_Unplugged 3 _ES	4 / 4	1	113			:
ApKb	Balad	178	FC_Unplugged 3 _ES	4 / 4	1	113			:
ApKb	Balad	179	BA_Unplugged 3 _ES	4 / 4	1	113			:
ApKb	Balad	180	MA_EP Ballad _XS	4 / 4	2	60			Electric Piano
ApKb	Balad	181	MB_EP Ballad _XS	4 / 4	2	60			:
ApKb	Balad	182	MC_EP Ballad _XS	4 / 4	2	60			:
ApKb	Balad	183	FA_EP Ballad _XS	4 / 4	1	60			:
ApKb	Balad	184	FB_EP Ballad _XS	4 / 4	1	60			:
ApKb	Balad	185	FC_EP Ballad _XS	4 / 4	1	60			:
ApKb	Balad	186	BA_EP Ballad _XS	4 / 4	1	60			:
ApKb	Balad	187	EA_EP Ballad _XS	4 / 4	4	60			:
ApKb	Balad	188	EB_EP Ballad _XS	4 / 4	4	60			:
ApKb	Balad	189	MA1_8Beat Slow _XS	4 / 4	4	78			Acoustic Piano
ApKb	Balad	190	MB1_8Beat Slow _XS	4 / 4	4	78			:
ApKb	Balad	191	MC1_8Beat Slow _XS	4 / 4	4	78			:
ApKb	Balad	192	FA1_8Beat Slow _XS	4 / 4	1	78			:
ApKb	Balad	193	FB1_8Beat Slow _XS	4 / 4	1	78			:
ApKb	Balad	194	FC1_8Beat Slow _XS	4 / 4	1	78			:
ApKb	Balad	195	BA1_8Beat Slow _XS	4 / 4	1	78			:
ApKb	Balad	196	MA1_8Beat Slow _ES	4 / 4	4	78			:
ApKb	Balad	197	MB1_8Beat Slow _ES	4 / 4	4	78			:
ApKb	Balad	198	MC1_8Beat Slow _ES	4 / 4	4	78			:
ApKb	Balad	199	FA1_8Beat Slow _ES	4 / 4	1	78			:
ApKb	Balad	200	FB1_8Beat Slow _ES	4 / 4	1	78			:
ApKb	Balad	201	FC1_8Beat Slow _ES	4 / 4	1	78			:
ApKb	Balad	202	BA1_8Beat Slow _ES	4 / 4	1	78			:
ApKb	Balad	203	MA2_8Beat Slow _XS	4 / 4	4	78			Electric Piano
ApKb	Balad	204	MB2_8Beat Slow _XS	4 / 4	4	78			:
ApKb	Balad	205	MC2_8Beat Slow _XS	4 / 4	4	78			:
ApKb	Balad	206	FA2_8Beat Slow _XS	4 / 4	1	78			:
ApKb	Balad	207	FB2_8Beat Slow _XS	4 / 4	1	78			:
ApKb	Balad	208	FC2_8Beat Slow _XS	4 / 4	1	78			:
ApKb	Balad	209	BA2_8Beat Slow _XS	4 / 4	1	78			:
ApKb	Balad	210	MA2_8Beat Slow _ES	4 / 4	4	78			:
ApKb	Balad	211	MB2_8Beat Slow _ES	4 / 4	4	78			:
ApKb	Balad	212	MC2_8Beat Slow _ES	4 / 4	4	78			:
ApKb	Balad	213	FA2_8Beat Slow _ES	4 / 4	1	78			:
ApKb	Balad	214	FB2_8Beat Slow _ES	4 / 4	1	78			:
ApKb	Balad	215	FC2_8Beat Slow _ES	4 / 4	1	78			:
ApKb	Balad	216	BA2_8Beat Slow _ES	4 / 4	1	78			:
ApKb	Balad	217	MA_8Beat Soft _XS	4 / 4	4	100			:
ApKb	Balad	218	MB_8Beat Soft _XS	4 / 4	4	100			:
ApKb	Balad	219	MC_8Beat Soft _XS	4 / 4	4	100			:
ApKb	Balad	220	FA_8Beat Soft _XS	4 / 4	1	100			:
ApKb	Balad	221	FB_8Beat Soft _XS	4 / 4	1	100			:
ApKb	Balad	222	FC_8Beat Soft _XS	4 / 4	1	100			:
ApKb	Balad	223	BA_8Beat Soft _XS	4 / 4	1	100			:
ApKb	Balad	224	MA_8Beat Soft _ES	4 / 4	4	100			:
ApKb	Balad	225	MB_8Beat Soft _ES	4 / 4	4	100			:
ApKb	Balad	226	MC_8Beat Soft _ES	4 / 4	4	100			:
ApKb	Balad	227	FA_8Beat Soft _ES	4 / 4	1	100			:
ApKb	Balad	228	FB_8Beat Soft _ES	4 / 4	1	100			:
ApKb	Balad	229	FC_8Beat Soft _ES	4 / 4	1	100			:
ApKb	Balad	230	BA_8Beat Soft _ES	4 / 4	1	100			:
ApKb	Balad	231	MA_Slowfeel	4 / 4	1	74			:
ApKb	Balad	232	MB_Slowfeel	4 / 4	1	74			:
ApKb	Balad	233	MC_Slowfeel	4 / 4	1	74			:
ApKb	Balad	234	MD_Slowfeel	4 / 4	1	74			:
ApKb	Balad	235	FB_Slowfeel	4 / 4	1	74			:
ApKb	Balad	236	FC_Slowfeel	4 / 4	1	74			:
ApKb	Balad	237	MA_16Bt Ballad1 _XS	4 / 4	4	75			:
ApKb	Balad	238	MB_16Bt Ballad1 _XS	4 / 4	4	75			:
ApKb	Balad	239	MC_16Bt Ballad1 _XS	4 / 4	4	75			:
ApKb	Balad	240	FA_16Bt Ballad1 _XS	4 / 4	1	75			:
ApKb	Balad	241	FB_16Bt Ballad1 _XS	4 / 4	1	75			:
ApKb	Balad	242	FC_16Bt Ballad1 _XS	4 / 4	1	75			:
ApKb	Balad	243	BA_16Bt Ballad1 _XS	4 / 4	1	75			:

Main Category	Sub Category	ARP No.	ARP Name	Time Signature	Length	Original Tempo	Accent	Random SFX	Voice Type
ApKb	Balad	244	MA_16Bt Ballad1 _ES	4 / 4	4	75			Electric Piano
ApKb	Balad	245	MB_16Bt Ballad1 _ES	4 / 4	4	75			:
ApKb	Balad	246	MC_16Bt Ballad1 _ES	4 / 4	4	75			:
ApKb	Balad	247	FA_16Bt Ballad1 _ES	4 / 4	1	75			:
ApKb	Balad	248	FB_16Bt Ballad1 _ES	4 / 4	1	75			:
ApKb	Balad	249	FC_16Bt Ballad1 _ES	4 / 4	1	75			:
ApKb	Balad	250	BA_16Bt Ballad1 _ES	4 / 4	1	75			:
ApKb	HipHp	251	MA_New Hip Hop _XS	4 / 4	2	85			:
ApKb	HipHp	252	MB_New Hip Hop _XS	4 / 4	2	85			:
ApKb	HipHp	253	MC_New Hip Hop _XS	4 / 4	2	85			:
ApKb	HipHp	254	FA_New Hip Hop _XS	4 / 4	1	85			:
ApKb	HipHp	255	FB_New Hip Hop _XS	4 / 4	1	85			:
ApKb	HipHp	256	FC_New Hip Hop _XS	4 / 4	1	85			:
ApKb	HipHp	257	BA_New Hip Hop _XS	4 / 4	1	85			:
ApKb	HipHp	258	EA_New Hip Hop _XS	4 / 4	3	85			:
ApKb	HipHp	259	EB_New Hip Hop _XS	4 / 4	3	85			:
ApKb	HipHp	260	MA1_Hip Hop 1 _ES	4 / 4	2	105			:
ApKb	HipHp	261	MB1_Hip Hop 1 _ES	4 / 4	2	105			:
ApKb	HipHp	262	MC1_Hip Hop 1 _ES	4 / 4	2	105			:
ApKb	HipHp	263	FB1_Hip Hop 1 _ES	4 / 4	1	105			:
ApKb	HipHp	264	MA2_Hip Hop 1 _ES	4 / 4	2	105			Harpsichord
ApKb	HipHp	265	MB2_Hip Hop 1 _ES	4 / 4	2	105			:
ApKb	HipHp	266	MC2_Hip Hop 1 _ES	4 / 4	2	105			:
ApKb	HipHp	267	FB2_Hip Hop 1 _ES	4 / 4	1	105			:
ApKb	HipHp	268	FC_Hip Hop 2	4 / 4	2	94			Electric Piano
ApKb	HipHp	269	MA_Hip Reggae _XS	4 / 4	4	92			Acoustic Piano
ApKb	HipHp	270	MB_Hip Reggae _XS	4 / 4	4	92			:
ApKb	HipHp	271	MC_Hip Reggae _XS	4 / 4	4	92			:
ApKb	HipHp	272	FB_Hip Reggae _XS	4 / 4	1	92			:
ApKb	HipHp	273	MA1_ClasicHipHop	4 / 4	1	90			:
ApKb	HipHp	274	MB1_ClasicHipHop	4 / 4	1	90			:
ApKb	HipHp	275	IA2_ClasicHipHop _ES	4 / 4	2	90			Electric Piano
ApKb	R&B-M	276	MA_Slow & Easy _XS	4 / 4	4	72			:
ApKb	R&B-M	277	MB_Slow & Easy _XS	4 / 4	4	72			:
ApKb	R&B-M	278	MC_Slow & Easy _XS	4 / 4	4	72			:
ApKb	R&B-M	279	FA_Slow & Easy _XS	4 / 4	1	72			:
ApKb	R&B-M	280	FB_Slow & Easy _XS	4 / 4	1	72			:
ApKb	R&B-M	281	FC_Slow & Easy _XS	4 / 4	1	72			:
ApKb	R&B-M	282	BA_Slow & Easy _XS	4 / 4	1	72			:
ApKb	R&B-M	283	EA_Slow & Easy _XS	4 / 4	3	72			:
ApKb	R&B-M	284	EB_Slow & Easy _XS	4 / 4	4	72			:
ApKb	R&B-M	285	MA_Pop Shuffle1 _XS	4 / 4	4	94			Acoustic Piano
ApKb	R&B-M	286	MB_Pop Shuffle1 _XS	4 / 4	4	94			:
ApKb	R&B-M	287	MC_Pop Shuffle1 _XS	4 / 4	4	94			:
ApKb	R&B-M	288	FA_Pop Shuffle1 _XS	4 / 4	1	94			:
ApKb	R&B-M	289	FB_Pop Shuffle1 _XS	4 / 4	1	94			:
ApKb	R&B-M	290	FC_Pop Shuffle1 _XS	4 / 4	1	94			:
ApKb	R&B-M	291	BA_Pop Shuffle1 _XS	4 / 4	1	94			:
ApKb	R&B-M	292	MA_Pop Shuffle1 _ES	4 / 4	4	94			:
ApKb	R&B-M	293	MB_Pop Shuffle1 _ES	4 / 4	4	94			:
ApKb	R&B-M	294	MC_Pop Shuffle1 _ES	4 / 4	4	94			:
ApKb	R&B-M	295	FA_Pop Shuffle1 _ES	4 / 4	1	94			:
ApKb	R&B-M	296	FB_Pop Shuffle1 _ES	4 / 4	1	94			:
ApKb	R&B-M	297	FC_Pop Shuffle1 _ES	4 / 4	1	94			:
ApKb	R&B-M	298	BA_Pop Shuffle1 _ES	4 / 4	1	94			:
ApKb	R&B-M	299	MA_Pop Shuffle2 _XS	4 / 4	4	80			:
ApKb	R&B-M	300	MB_Pop Shuffle2 _XS	4 / 4	4	80			:
ApKb	R&B-M	301	MC_Pop Shuffle2 _XS	4 / 4	4	80			:
ApKb	R&B-M	302	FA_Pop Shuffle2 _XS	4 / 4	1	80			:
ApKb	R&B-M	303	FB_Pop Shuffle2 _XS	4 / 4	1	80			:
ApKb	R&B-M	304	FC_Pop Shuffle2 _XS	4 / 4	1	80			:
ApKb	R&B-M	305	BA_Pop Shuffle2 _XS	4 / 4	1	80			:
ApKb	R&B-M	306	MA_Pop Shuffle2 _ES	4 / 4	4	80			:
ApKb	R&B-M	307	MB_Pop Shuffle2 _ES	4 / 4	4	80			:
ApKb	R&B-M	308	MC_Pop Shuffle2 _ES	4 / 4	4	80			:
ApKb	R&B-M	309	FA_Pop Shuffle2 _ES	4 / 4	1	80			:
ApKb	R&B-M	310	FB_Pop Shuffle2 _ES	4 / 4	1	80			:
ApKb	R&B-M	311	FC_Pop Shuffle2 _ES	4 / 4	1	80			:
ApKb	R&B-M	312	BA_Pop Shuffle2 _ES	4 / 4	1	80			:
ApKb	R&B-M	313	MA_R&B Disco	4 / 4	2	110			Electric Piano
ApKb	R&B-M	314	MD_R&B Disco	4 / 4	2	110			:
ApKb	R&B-M	315	FB_R&B Disco	4 / 4	1	110			:
ApKb	R&B-M	316	FC_R&B Disco	4 / 4	2	110			:
ApKb	R&B-M	317	MA_ChartPop1 _XS	4 / 4	4	92			:
ApKb	R&B-M	318	MB_ChartPop1 _XS	4 / 4	4	92			:
ApKb	R&B-M	319	MC_ChartPop1 _XS	4 / 4	4	92			:
ApKb	R&B-M	320	FA_ChartPop1 _XS	4 / 4	1	92			:
ApKb	R&B-M	321	FB_ChartPop1 _XS	4 / 4	1	92			:
ApKb	R&B-M	322	FC_ChartPop1 _XS	4 / 4	1	92			:
ApKb	R&B-M	323	BA_ChartPop1 _XS	4 / 4	1	92			:
ApKb	R&B-M	324	EA_ChartPop1 _XS	4 / 4	3	92			:
ApKb	R&B-M	325	EB_ChartPop1 _XS	4 / 4	3	92			:
ApKb	R&B-M	326	MA_H-R&B Pop _XS	4 / 4	4	140			:

Main Category	Sub Category	ARP No.	ARP Name	Time Signature	Length	Original Tempo	Accent	Random SFX	Voice Type
ApKb	R&B-M	327	MB_H-R&B Pop _XS	4 / 4	4	140			Electric Piano
ApKb	R&B-M	328	MC_H-R&B Pop _XS	4 / 4	4	140			:
ApKb	R&B-M	329	FA_H-R&B Pop _XS	4 / 4	1	140			:
ApKb	R&B-M	330	FB_H-R&B Pop _XS	4 / 4	1	140			:
ApKb	R&B-M	331	FC_H-R&B Pop _XS	4 / 4	1	140			:
ApKb	R&B-M	332	BA_H-R&B Pop _XS	4 / 4	1	140			:
ApKb	R&B-M	333	MA_J-R&B Pop _XS	4 / 4	4	100			:
ApKb	R&B-M	334	MB_J-R&B Pop _XS	4 / 4	4	100			:
ApKb	R&B-M	335	MC_J-R&B Pop _XS	4 / 4	4	100			:
ApKb	R&B-M	336	FA_J-R&B Pop _XS	4 / 4	1	100			:
ApKb	R&B-M	337	FB_J-R&B Pop _XS	4 / 4	1	100			:
ApKb	R&B-M	338	FC_J-R&B Pop _XS	4 / 4	1	100			:
ApKb	R&B-M	339	MA_R&B Ballad 1 _XS	4 / 4	4	70			:
ApKb	R&B-M	340	MB_R&B Ballad 1 _XS	4 / 4	4	70			:
ApKb	R&B-M	341	MC_R&B Ballad 1 _XS	4 / 4	4	70			:
ApKb	R&B-M	342	FA_R&B Ballad 1 _XS	4 / 4	1	70			:
ApKb	R&B-M	343	FB_R&B Ballad 1 _XS	4 / 4	1	70			:
ApKb	R&B-M	344	FC_R&B Ballad 1 _XS	4 / 4	1	70			:
ApKb	R&B-M	345	BA_R&B Ballad 1 _XS	4 / 4	1	70			:
ApKb	R&B-M	346	MA_R&B Ballad 3 _XS	4 / 4	4	113			:
ApKb	R&B-M	347	MB_R&B Ballad 3 _XS	4 / 4	4	113			:
ApKb	R&B-M	348	MC_R&B Ballad 3 _XS	4 / 4	4	113			:
ApKb	R&B-M	349	FA_R&B Ballad 3 _XS	4 / 4	1	113			:
ApKb	R&B-M	350	FB_R&B Ballad 3 _XS	4 / 4	1	113			:
ApKb	R&B-M	351	FC_R&B Ballad 3 _XS	4 / 4	1	113			:
ApKb	R&B-M	352	MA_Ballad EP1	4 / 4	2	74			:
ApKb	R&B-M	353	MA_Ballad EP2	4 / 4	2	74			:
ApKb	R&B-M	354	MA_Ballad EP3	4 / 4	2	74			:
ApKb	R&B-M	355	MA_Swing EP	4 / 4	1	101			:
ApKb	R&B-M	356	MA_EP Chords	4 / 4	2	101			:
ApKb	R&B-M	357	MA1_6/8 R&B	4 / 4	2	61			Acoustic Piano
ApKb	R&B-M	358	MB1_6/8 R&B	4 / 4	2	61			:
ApKb	R&B-M	359	MC1_6/8 R&B	4 / 4	2	61			:
ApKb	R&B-M	360	MD1_6/8 R&B	4 / 4	2	61			:
ApKb	R&B-M	361	IA1_6/8 R&B	4 / 4	2	61			:
ApKb	R&B-M	362	FA1_6/8 R&B	4 / 4	1	61			:
ApKb	R&B-M	363	FB1_6/8 R&B	4 / 4	1	61			:
ApKb	R&B-M	364	MA2_6/8 R&B	4 / 4	2	61			Electric Piano
ApKb	R&B-M	365	MB2_6/8 R&B	4 / 4	2	61			:
ApKb	R&B-M	366	MC2_6/8 R&B	4 / 4	2	61			:
ApKb	R&B-M	367	MD2_6/8 R&B	4 / 4	2	61			:
ApKb	R&B-M	368	IA2_6/8 R&B	4 / 4	2	61			:
ApKb	R&B-M	369	FA2_6/8 R&B _ES	4 / 4	1	61			:
ApKb	R&B-M	370	FB2_6/8 R&B _ES	4 / 4	1	61			:
ApKb	R&B-M	371	MB_Smooth 1	4 / 4	2	115			:
ApKb	R&B-M	372	MC_Smooth 1	4 / 4	2	115			:
ApKb	R&B-M	373	MA_New Gospel	4 / 4	2	90			:
ApKb	R&B-M	374	MB_New Gospel	4 / 4	2	90			:
ApKb	R&B-M	375	MC_New Gospel	4 / 4	2	90			:
ApKb	R&B-M	376	MD_New Gospel	4 / 4	2	90			:
ApKb	R&B-M	377	FA_New Gospel	4 / 4	1	90			:
ApKb	R&B-M	378	FC_New Gospel	4 / 4	2	90			:
ApKb	R&B-C	379	MA_Philadelphia _XS	4 / 4	2	100			Acoustic Piano
ApKb	R&B-C	380	MB_Philadelphia _XS	4 / 4	2	100			:
ApKb	R&B-C	381	MC_Philadelphia _XS	4 / 4	2	100			:
ApKb	R&B-C	382	FA_Philadelphia _XS	4 / 4	1	100			:
ApKb	R&B-C	383	FB_Philadelphia _XS	4 / 4	1	100			:
ApKb	R&B-C	384	FC_Philadelphia _XS	4 / 4	1	100			:
ApKb	R&B-C	385	BA_Philadelphia _XS	4 / 4	1	100			:
ApKb	R&B-C	386	EA_Philadelphia _XS	4 / 4	4	100			:
ApKb	R&B-C	387	EB_Philadelphia _XS	4 / 4	3	100			:
ApKb	R&B-C	388	MA_Soul 2 _ES	4 / 4	2	120			:
ApKb	R&B-C	389	MB_Soul 2 _ES	4 / 4	1	120			:
ApKb	R&B-C	390	MC_Soul 2 _ES	4 / 4	4	120			:
ApKb	R&B-C	391	MD_Soul 2 _ES	4 / 4	4	120			:
ApKb	R&B-C	392	FC_Soul 2 _ES	4 / 4	4	120			:
ApKb	R&B-C	393	MA_Frankly Soul _XS	4 / 4	4	120			:
ApKb	R&B-C	394	MB_Frankly Soul _XS	4 / 4	4	120			:
ApKb	R&B-C	395	MC_Frankly Soul _XS	4 / 4	4	120			:
ApKb	R&B-C	396	FA_Frankly Soul _XS	4 / 4	1	120			:
ApKb	R&B-C	397	FB_Frankly Soul _XS	4 / 4	1	120			:
ApKb	R&B-C	398	FC_Frankly Soul _XS	4 / 4	1	120			:
ApKb	R&B-C	399	BA_Frankly Soul _XS	4 / 4	1	120			:
ApKb	R&B-C	400	EA_Frankly Soul _XS	4 / 4	3	120			:
ApKb	R&B-C	401	EB_Frankly Soul _XS	4 / 4	4	120			:
ApKb	R&B-C	402	MA_Soul Beat _XS	4 / 4	4	124			:
ApKb	R&B-C	403	MB_Soul Beat _XS	4 / 4	4	124			:
ApKb	R&B-C	404	MC_Soul Beat _XS	4 / 4	4	124			:
ApKb	R&B-C	405	FA_Soul Beat _XS	4 / 4	1	124			:
ApKb	R&B-C	406	FB_Soul Beat _XS	4 / 4	1	124			:
ApKb	R&B-C	407	FC_Soul Beat _XS	4 / 4	1	124			:
ApKb	R&B-C	408	BA_Soul Beat _XS	4 / 4	1	124			:
ApKb	R&B-C	409	EA_Soul Beat _XS	4 / 4	3	123			:

Main Category	Sub Category	ARP No.	ARP Name	Time Signature	Length	Original Tempo	Accent	Random SFX	Voice Type
ApKb	R&B-C	410	EB_Soul Beat _XS	4 / 4	3	123			Acoustic Piano
ApKb	R&B-C	411	MA_Soul Shuffle _XS	4 / 4	4	98			Electric Piano
ApKb	R&B-C	412	MB_Soul Shuffle _XS	4 / 4	4	98			:
ApKb	R&B-C	413	MC_Soul Shuffle _XS	4 / 4	4	98			:
ApKb	R&B-C	414	FA_Soul Shuffle _XS	4 / 4	1	98			:
ApKb	R&B-C	415	FB_Soul Shuffle _XS	4 / 4	1	98			:
ApKb	R&B-C	416	FC_Soul Shuffle _XS	4 / 4	1	98			:
ApKb	R&B-C	417	BA_Soul Shuffle _XS	4 / 4	1	98			:
ApKb	R&B-C	418	EA_Soul Shuffle _XS	4 / 4	3	98			:
ApKb	R&B-C	419	EB_Soul Shuffle _XS	4 / 4	3	98			:
ApKb	R&B-C	420	MA_Soul Swing _XS	4 / 4	4	124			Acoustic Piano
ApKb	R&B-C	421	MB_Soul Swing _XS	4 / 4	4	124			:
ApKb	R&B-C	422	MC_Soul Swing _XS	4 / 4	4	124			:
ApKb	R&B-C	423	FA_Soul Swing _XS	4 / 4	1	124			:
ApKb	R&B-C	424	FB_Soul Swing _XS	4 / 4	1	124			:
ApKb	R&B-C	425	FC_Soul Swing _XS	4 / 4	1	124			:
ApKb	R&B-C	426	BA_Soul Swing _XS	4 / 4	1	124			:
ApKb	R&B-C	427	EA_Soul Swing _XS	4 / 4	3	123			:
ApKb	R&B-C	428	EB_Soul Swing _XS	4 / 4	5	123			:
ApKb	R&B-C	429	MA_GospelBrothr _XS	4 / 4	4	108			:
ApKb	R&B-C	430	MB_GospelBrothr _XS	4 / 4	4	108			:
ApKb	R&B-C	431	MC_GospelBrothr _XS	4 / 4	4	108			:
ApKb	R&B-C	432	FA_GospelBrothr _XS	4 / 4	1	108			:
ApKb	R&B-C	433	FB_GospelBrothr _XS	4 / 4	1	108			:
ApKb	R&B-C	434	FC_GospelBrothr _XS	4 / 4	1	108			:
ApKb	R&B-C	435	BA_GospelBrothr _XS	4 / 4	1	108			:
ApKb	R&B-C	436	EA_GospelBrothr _XS	4 / 4	4	108			:
ApKb	R&B-C	437	EB_GospelBrothr _XS	4 / 4	3	108			:
ApKb	Funk	438	MA_Funk 1 _XS	4 / 4	8	104			Electric Piano
ApKb	Funk	439	MB_Funk 1 _XS	4 / 4	8	104			:
ApKb	Funk	440	MC_Funk 1 _XS	4 / 4	8	104			:
ApKb	Funk	441	FA_Funk 1 _XS	4 / 4	1	104			:
ApKb	Funk	442	FB_Funk 1 _XS	4 / 4	1	104			:
ApKb	Funk	443	FC_Funk 1 _XS	4 / 4	1	104			:
ApKb	Funk	444	BA_Funk 1 _XS	4 / 4	1	104			:
ApKb	Funk	445	EA_Funk 1 _XS	4 / 4	9	104			:
ApKb	Funk	446	EB_Funk 1 _XS	4 / 4	4	104			:
ApKb	Funk	447	MD_Cool Funk	4 / 4	2	96			:
ApKb	Funk	448	IA_Cool Funk	4 / 4	2	96			:
ApKb	Funk	449	FA_Cool Funk	4 / 4	1	96			:
ApKb	Funk	450	FB_Cool Funk	4 / 4	1	96			:
ApKb	Funk	451	MA_Jazz Pop _XS	4 / 4	2	102			:
ApKb	Funk	452	MB_Jazz Pop _XS	4 / 4	2	102			:
ApKb	Funk	453	MC_Jazz Pop _XS	4 / 4	2	102			:
ApKb	Funk	454	FA_Jazz Pop _XS	4 / 4	1	102			:
ApKb	Funk	455	FB_Jazz Pop _XS	4 / 4	1	102			:
ApKb	Funk	456	FC_Jazz Pop _XS	4 / 4	1	102			:
ApKb	Funk	457	BA_Jazz Pop _XS	4 / 4	1	102			:
ApKb	Funk	458	MA_Club Jazz 1 _XS	4 / 4	4	125			Acoustic Piano
ApKb	Funk	459	MB_Club Jazz 1 _XS	4 / 4	4	125			:
ApKb	Funk	460	MC_Club Jazz 1 _XS	4 / 4	4	125			:
ApKb	Funk	461	FA_Club Jazz 1 _XS	4 / 4	1	125			:
ApKb	Funk	462	FB_Club Jazz 1 _XS	4 / 4	1	125			:
ApKb	Funk	463	FC_Club Jazz 1 _XS	4 / 4	1	125			:
ApKb	Funk	464	BA_Club Jazz 1 _XS	4 / 4	1	125			:
ApKb	Funk	465	MA_Club Jazz 1 _ES	4 / 4	4	125			:
ApKb	Funk	466	MB_Club Jazz 1 _ES	4 / 4	4	125			:
ApKb	Funk	467	MC_Club Jazz 1 _ES	4 / 4	4	125			:
ApKb	Funk	468	FA_Club Jazz 1 _ES	4 / 4	1	125			:
ApKb	Funk	469	FB_Club Jazz 1 _ES	4 / 4	1	125			:
ApKb	Funk	470	FC_Club Jazz 1 _ES	4 / 4	1	125			:
ApKb	Funk	471	BA_Club Jazz 1 _ES	4 / 4	1	125			:
ApKb	Funk	472	MA_Club Jazz 2 _XS	4 / 4	4	92			:
ApKb	Funk	473	MB_Club Jazz 2 _XS	4 / 4	4	92			:
ApKb	Funk	474	MC_Club Jazz 2 _XS	4 / 4	4	92			:
ApKb	Funk	475	FA_Club Jazz 2 _XS	4 / 4	1	92			:
ApKb	Funk	476	FB_Club Jazz 2 _XS	4 / 4	1	92			:
ApKb	Funk	477	FC_Club Jazz 2 _XS	4 / 4	1	92			:
ApKb	Funk	478	BA_Club Jazz 2 _XS	4 / 4	1	92			:
ApKb	Funk	479	MA_Club Jazz 2 _ES	4 / 4	4	92			:
ApKb	Funk	480	MB_Club Jazz 2 _ES	4 / 4	4	92			:
ApKb	Funk	481	MC_Club Jazz 2 _ES	4 / 4	4	92			:
ApKb	Funk	482	FA_Club Jazz 2 _ES	4 / 4	1	92			:
ApKb	Funk	483	FB_Club Jazz 2 _ES	4 / 4	1	92			:
ApKb	Funk	484	FC_Club Jazz 2 _ES	4 / 4	1	92			:
ApKb	Funk	485	BA_Club Jazz 2 _ES	4 / 4	1	92			:
ApKb	Funk	486	MA_Gospel Funk _XS	4 / 4	4	106			:
ApKb	Funk	487	MB_Gospel Funk _XS	4 / 4	4	106			:
ApKb	Funk	488	MC_Gospel Funk _XS	4 / 4	4	106			:
ApKb	Funk	489	FA_Gospel Funk _XS	4 / 4	1	106			:
ApKb	Funk	490	FB_Gospel Funk _XS	4 / 4	1	106			:
ApKb	Funk	491	FC_Gospel Funk _XS	4 / 4	1	106			:
ApKb	Funk	492	BA_Gospel Funk _XS	4 / 4	1	106			:

Main Category	Sub Category	ARP No.	ARP Name	Time Signature	Length	Original Tempo	Accent	Random SFX	Voice Type
ApKb	Funk	493	EA_Gospel Funk _XS	4 / 4	4	106			Acoustic Piano
ApKb	Funk	494	EB_Gospel Funk _XS	4 / 4	3	106			:
ApKb	Funk	495	MA_Funk Disco _XS	4 / 4	2	126			Electric Piano
ApKb	Funk	496	MB_Funk Disco _XS	4 / 4	2	126			:
ApKb	Funk	497	MC_Funk Disco _XS	4 / 4	2	126			:
ApKb	Funk	498	FA_Funk Disco _XS	4 / 4	1	126			:
ApKb	Funk	499	FB_Funk Disco _XS	4 / 4	1	126			:
ApKb	Funk	500	FC_Funk Disco _XS	4 / 4	1	126			:
ApKb	Funk	501	BA_Funk Disco _XS	4 / 4	1	126			:
ApKb	Funk	502	EA_Funk Disco _XS	4 / 4	4	126			:
ApKb	Funk	503	EB_Funk Disco _XS	4 / 4	3	126			:
ApKb	Funk	504	MA_70sDiscoFunk _XS	4 / 4	4	112			Acoustic Piano
ApKb	Funk	505	MB_70sDiscoFunk _XS	4 / 4	4	112			:
ApKb	Funk	506	MC_70sDiscoFunk _XS	4 / 4	4	112			:
ApKb	Funk	507	FA_70sDiscoFunk _XS	4 / 4	1	112			:
ApKb	Funk	508	FB_70sDiscoFunk _XS	4 / 4	1	112			:
ApKb	Funk	509	FC_70sDiscoFunk _XS	4 / 4	1	112			:
ApKb	Funk	510	BA_70sDiscoFunk _XS	4 / 4	1	112			:
ApKb	Funk	511	EA_70sDiscoFunk _XS	4 / 4	4	112			:
ApKb	Funk	512	EB_70sDiscoFunk _XS	4 / 4	3	112			:
ApKb	Funk	513	MA_Clavi1	4 / 4	1	110			Clavi
ApKb	Funk	514	MA_Clavi2	4 / 4	1	110			:
ApKb	Funk	515	MA_Clavi3	4 / 4	1	110			:
ApKb	Funk	516	MA_Clavi4	4 / 4	1	124			:
ApKb	Funk	517	MA_Clavi5	4 / 4	1	124			:
ApKb	Funk	518	MA_Clavi6	4 / 4	1	124			:
ApKb	Funk	519	MA_Clavi7	4 / 4	1	124			:
ApKb	Funk	520	MA_Super Clavi	4 / 4	4	101			:
ApKb	Funk	521	MA_Touch Clavi	4 / 4	1	101			:
ApKb	House	522	MA_Disco House _XS	4 / 4	4	126			Electric Piano
ApKb	House	523	MB_Disco House _XS	4 / 4	4	126			:
ApKb	House	524	MC_Disco House _XS	4 / 4	4	126			:
ApKb	House	525	FA_Disco House _XS	4 / 4	1	126			:
ApKb	House	526	FB_Disco House _XS	4 / 4	1	126			:
ApKb	House	527	FC_Disco House _XS	4 / 4	1	126			:
ApKb	House	528	BA_Disco House _XS	4 / 4	1	126			:
ApKb	House	529	MD_Club House	4 / 4	1	128			:
ApKb	House	530	FC_Club House _ES	4 / 4	2	128			:
ApKb	House	531	MA_Garage 2	4 / 4	2	127			:
ApKb	House	532	MA_House Pf1	4 / 4	2	130			Acoustic Piano
ApKb	House	533	MA_House Pf2	4 / 4	1	130			:
ApKb	House	534	MA_House Pf3	4 / 4	1	130			:
ApKb	House	535	MA_House Pf4	4 / 4	1	130			:
ApKb	House	536	MA_House Pf5	4 / 4	1	130			:
ApKb	House	537	MA_Deep House1 _ES	4 / 4	1	127			Electric Piano
ApKb	House	538	MA_Deep House2 _ES	4 / 4	1	130			:
ApKb	House	539	MA_Deep House3 _ES	4 / 4	1	127			:
ApKb	House	540	MA_Deep House4 _ES	4 / 4	2	130			:
ApKb	House	541	MA_DA House	4 / 4	2	120			Acoustic Piano
ApKb	House	542	MA_Syn Clavi	4 / 4	1	126			Clavi
ApKb	Chill	543	MA_Ambient 3 _ES	4 / 4	4	88			Electric Piano
ApKb	Chill	544	MB_Ambient 3 _ES	4 / 4	4	88			:
ApKb	Chill	545	MC_Ambient 3 _ES	4 / 4	4	88			:
ApKb	Chill	546	FA_Ambient 3 _ES	4 / 4	1	88			:
ApKb	Chill	547	FB_Ambient 3 _ES	4 / 4	1	88			:
ApKb	Chill	548	FC_Ambient 3 _ES	4 / 4	1	88			:
ApKb	Chill	549	BA_Ambient 3 _ES	4 / 4	1	88			:
ApKb	Jazz	550	MA_AcousticJazz _ES	4 / 4	4	204			Acoustic Piano
ApKb	Jazz	551	MB_AcousticJazz _ES	4 / 4	4	204			:
ApKb	Jazz	552	MC_AcousticJazz _ES	4 / 4	4	204			:
ApKb	Jazz	553	MD_AcousticJazz _ES	4 / 4	4	204			:
ApKb	Jazz	554	FA_AcousticJazz _ES	4 / 4	1	204			:
ApKb	Jazz	555	MA_JazzWaltzMed _XS	3 / 4	8	180			:
ApKb	Jazz	556	MB_JazzWaltzMed _XS	3 / 4	8	180			:
ApKb	Jazz	557	MC_JazzWaltzMed _XS	3 / 4	8	180			:
ApKb	Jazz	558	FA_JazzWaltzMed _XS	3 / 4	1	180			:
ApKb	Jazz	559	FB_JazzWaltzMed _XS	3 / 4	1	180			:
ApKb	Jazz	560	FC_JazzWaltzMed _XS	3 / 4	1	180			:
ApKb	Jazz	561	BA_JazzWaltzMed _XS	3 / 4	1	180			:
ApKb	Jazz	562	EA_JazzWaltzMed _XS	3 / 4	7	180			:
ApKb	Jazz	563	MA_R&R Shuffle _XS	4 / 4	4	192			:
ApKb	Jazz	564	MB_R&R Shuffle _XS	4 / 4	4	192			:
ApKb	Jazz	565	MC_R&R Shuffle _XS	4 / 4	4	192			:
ApKb	Jazz	566	FA_R&R Shuffle _XS	4 / 4	1	192			:
ApKb	Jazz	567	FB_R&R Shuffle _XS	4 / 4	1	192			:
ApKb	Jazz	568	FC_R&R Shuffle _XS	4 / 4	1	192			:
ApKb	Jazz	569	BA_R&R Shuffle _XS	4 / 4	1	192			:
ApKb	Jazz	570	EA_R&R Shuffle _XS	4 / 4	5	192			:
ApKb	Jazz	571	EB_R&R Shuffle _XS	4 / 4	5	192			:
ApKb	Jazz	572	MA_ShuffleBlues _XS	4 / 4	4	115			:
ApKb	Jazz	573	MB_ShuffleBlues _XS	4 / 4	4	115			:
ApKb	Jazz	574	MC_ShuffleBlues _XS	4 / 4	4	115			:
ApKb	Jazz	575	FA_ShuffleBlues _XS	4 / 4	1	115			:

Main Category	Sub Category	ARP No.	ARP Name	Time Signature	Length	Original Tempo	Accent	Random SFX	Voice Type
ApKb	Jazz	576	FB_ShuffleBlues _XS	4 / 4	1	115			Acoustic Piano
ApKb	Jazz	577	FC_ShuffleBlues _XS	4 / 4	1	115			:
ApKb	Jazz	578	BA_ShuffleBlues _XS	4 / 4	1	115			:
ApKb	Jazz	579	EA_ShuffleBlues _XS	4 / 4	5	115			:
ApKb	Jazz	580	EB_ShuffleBlues _XS	4 / 4	6	115			:
ApKb	Jazz	581	MA_Slow Blues 1 _XS	4 / 4	2	49			:
ApKb	Jazz	582	MB_Slow Blues 1 _XS	4 / 4	2	49			:
ApKb	Jazz	583	MC_Slow Blues 1 _XS	4 / 4	2	49			:
ApKb	Jazz	584	FA_Slow Blues 1 _XS	4 / 4	1	49			:
ApKb	Jazz	585	FB_Slow Blues 1 _XS	4 / 4	1	49			:
ApKb	Jazz	586	FC_Slow Blues 1 _XS	4 / 4	1	49			:
ApKb	Jazz	587	BA_Slow Blues 1 _XS	4 / 4	1	49			:
ApKb	Jazz	588	EA_Slow Blues 1 _XS	4 / 4	3	49			:
ApKb	Jazz	589	EB_Slow Blues 1 _XS	4 / 4	3	49			:
ApKb	Jazz	590	MA_Piano Boogie _XS	4 / 4	8	160			:
ApKb	Jazz	591	MB_Piano Boogie _XS	4 / 4	4	160			:
ApKb	Jazz	592	MC_Piano Boogie _XS	4 / 4	4	160			:
ApKb	Jazz	593	FA_Piano Boogie _XS	4 / 4	1	160			:
ApKb	Jazz	594	FB_Piano Boogie _XS	4 / 4	1	160			:
ApKb	Jazz	595	FC_Piano Boogie _XS	4 / 4	1	160			:
ApKb	Jazz	596	BA_Piano Boogie _XS	4 / 4	1	160			:
ApKb	Jazz	597	EA_Piano Boogie _XS	4 / 4	5	160			:
ApKb	Jazz	598	EB_Piano Boogie _XS	4 / 4	5	160			:
ApKb	Latin	599	MA_Salsa 1 _XS	4 / 4	4	177			:
ApKb	Latin	600	MB_Salsa 1 _XS	4 / 4	4	177			:
ApKb	Latin	601	MC_Salsa 1 _XS	4 / 4	4	177			:
ApKb	Latin	602	FA_Salsa 1 _XS	4 / 4	1	177			:
ApKb	Latin	603	FB_Salsa 1 _XS	4 / 4	1	177			:
ApKb	Latin	604	FC_Salsa 1 _XS	4 / 4	1	177			:
ApKb	Latin	605	BA_Salsa 1 _XS	4 / 4	1	177			:
ApKb	Latin	606	EA_Salsa 1 _XS	4 / 4	5	177			:
ApKb	Latin	607	EB_Salsa 1 _XS	4 / 4	5	177			:
ApKb	Latin	608	MA_Salsa 2 _ES	4 / 4	1	123			:
ApKb	Latin	609	MB_Salsa 2 _ES	4 / 4	1	123			:
ApKb	Latin	610	MC_Salsa 2	4 / 4	2	123			:
ApKb	Latin	611	MD_Salsa 2 _ES	4 / 4	4	123			:
ApKb	Latin	612	FC_Salsa 2	4 / 4	2	123			:
ApKb	Latin	613	MA_AfroCuban _XS	4 / 4	4	200			:
ApKb	Latin	614	MB_AfroCuban _XS	4 / 4	4	200			:
ApKb	Latin	615	MC_AfroCuban _XS	4 / 4	4	200			:
ApKb	Latin	616	FA_AfroCuban _XS	4 / 4	1	200			:
ApKb	Latin	617	FB_AfroCuban _XS	4 / 4	1	200			:
ApKb	Latin	618	FC_AfroCuban _XS	4 / 4	1	200			:
ApKb	Latin	619	BA_AfroCuban _XS	4 / 4	1	200			:
ApKb	Latin	620	EA_AfroCuban _XS	4 / 4	6	200			:
ApKb	Latin	621	EB_AfroCuban _XS	4 / 4	5	200			:
ApKb	Latin	622	MA_Montuno _ES	4 / 4	1	100			:
ApKb	Latin	623	MC_Montuno _ES	4 / 4	2	100			:
ApKb	Latin	624	MD_Montuno _ES	4 / 4	2	100			:
ApKb	Latin	625	FA_Montuno _ES	4 / 4	1	100			:
ApKb	Latin	626	FC_Montuno _ES	4 / 4	1	100			:
ApKb	Latin	627	MA_Samba	4 / 4	1	120			:
ApKb	Latin	628	MB_Samba	4 / 4	4	120			:
ApKb	Latin	629	MC_Samba	4 / 4	4	120			:
ApKb	Latin	630	MA_Bomba _XS	4 / 4	4	99			:
ApKb	Latin	631	MB_Bomba _XS	4 / 4	4	99			:
ApKb	Latin	632	MC_Bomba _XS	4 / 4	4	99			:
ApKb	Latin	633	FA_Bomba _XS	4 / 4	1	99			:
ApKb	Latin	634	FB_Bomba _XS	4 / 4	1	99			:
ApKb	Latin	635	FC_Bomba _XS	4 / 4	1	99			:
ApKb	Latin	636	BA_Bomba _XS	4 / 4	1	99			:
ApKb	Latin	637	EA_Bomba _XS	4 / 4	3	99			:
ApKb	Latin	638	EB_Bomba _XS	4 / 4	3	99			:
ApKb	Latin	639	MA_Merengue _XS	4 / 4	4	130			:
ApKb	Latin	640	MB_Merengue _XS	4 / 4	4	130			:
ApKb	Latin	641	MC_Merengue _XS	4 / 4	4	130			:
ApKb	Latin	642	FA_Merengue _XS	4 / 4	1	130			:
ApKb	Latin	643	FB_Merengue _XS	4 / 4	1	130			:
ApKb	Latin	644	FC_Merengue _XS	4 / 4	1	130			:
ApKb	Latin	645	BA_Merengue _XS	4 / 4	1	130			:
ApKb	Latin	646	EA_Merengue _XS	4 / 4	3	130			:
ApKb	Latin	647	EB_Merengue _XS	4 / 4	3	130			:
ApKb	Latin	648	MA_Guaguanco _XS	4 / 4	4	120			:
ApKb	Latin	649	MB_Guaguanco _XS	4 / 4	4	120			:
ApKb	Latin	650	MC_Guaguanco _XS	4 / 4	4	120			:
ApKb	Latin	651	FA_Guaguanco _XS	4 / 4	1	120			:
ApKb	Latin	652	FB_Guaguanco _XS	4 / 4	1	120			:
ApKb	Latin	653	FC_Guaguanco _XS	4 / 4	1	120			:
ApKb	Latin	654	BA_Guaguanco _XS	4 / 4	1	120			:
ApKb	Latin	655	EA_Guaguanco _XS	4 / 4	3	120			:
ApKb	Latin	656	EB_Guaguanco _XS	4 / 4	3	120			:
ApKb	Latin	657	MA1_Latin Rock	4 / 4	2	120			:
ApKb	Latin	658	MD1_Latin Rock	4 / 4	4	120			:

Main Category	Sub Category	ARP No.	ARP Name	Time Signature	Length	Original Tempo	Accent	Random SFX	Voice Type
ApKb	Latin	659	FB1_Latin Rock	4 / 4	1	120			Acoustic Piano
ApKb	Latin	660	MC2_Latin Rock	4 / 4	2	120			:
ApKb	Latin	661	FA2_Latin Rock	4 / 4	1	120			:
ApKb	Latin	662	MA_Disco Latin _XS	4 / 4	4	100			:
ApKb	Latin	663	MB_Disco Latin _XS	4 / 4	4	100			:
ApKb	Latin	664	MC_Disco Latin _XS	4 / 4	4	100			:
ApKb	Latin	665	FA_Disco Latin _XS	4 / 4	1	100			:
ApKb	Latin	666	FB_Disco Latin _XS	4 / 4	1	100			:
ApKb	Latin	667	FC_Disco Latin _XS	4 / 4	1	100			:
ApKb	Latin	668	BA_Disco Latin _XS	4 / 4	1	100			:
ApKb	Latin	669	IA_Latin House _ES	4 / 4	2	138			:
ApKb	Latin	670	FA_Latin House _ES	4 / 4	2	138			:
ApKb	Latin	671	FC_Latin House _ES	4 / 4	2	138			:
ApKb	Latin	672	MA_Piano Latin	4 / 4	2	120			:
ApKb	World	673	MA_Jumbo Reggae _XS	4 / 4	4	100			:
ApKb	World	674	MB_Jumbo Reggae _XS	4 / 4	4	100			:
ApKb	World	675	MC_Jumbo Reggae _XS	4 / 4	4	100			:
ApKb	World	676	FA_Jumbo Reggae _XS	4 / 4	1	100			:
ApKb	World	677	FB_Jumbo Reggae _XS	4 / 4	1	100			:
ApKb	World	678	FC_Jumbo Reggae _XS	4 / 4	1	100			:
ApKb	World	679	BA_Jumbo Reggae _XS	4 / 4	1	100			:
ApKb	World	680	EA_Jumbo Reggae _XS	4 / 4	3	100			:
ApKb	World	681	EB_Jumbo Reggae _XS	4 / 4	3	100			:
ApKb	World	682	MB1_Reggae 2	4 / 4	2	92			Electric Piano
ApKb	World	683	MD1_Reggae 2	4 / 4	2	92			:
ApKb	World	684	FA1_Reggae 2	4 / 4	1	92			:
ApKb	World	685	FB1_Reggae 2	4 / 4	1	92			:
ApKb	World	686	MA2_Reggae 2	4 / 4	2	92			Clavi
ApKb	World	687	MB2_Reggae 2	4 / 4	2	92			:
ApKb	World	688	MD2_Reggae 2	4 / 4	2	92			:
ApKb	World	689	IA2_Reggae 2	4 / 4	2	92			:
ApKb	World	690	FA2_Reggae 2	4 / 4	1	92			:
ApKb	World	691	MA_Saeidy _XS	4 / 4	2	120			:
ApKb	World	692	MB_Saeidy _XS	4 / 4	2	120			:
ApKb	World	693	MC_Saeidy _XS	4 / 4	4	120			:
ApKb	World	694	FA_Saeidy _XS	4 / 4	1	120			:
ApKb	World	695	FB_Saeidy _XS	4 / 4	1	120			:
ApKb	World	696	FC_Saeidy _XS	4 / 4	1	120			:
ApKb	World	697	BA_Saeidy _XS	4 / 4	1	120			:
ApKb	World	698	EA_Saeidy _XS	4 / 4	4	120			:
ApKb	Genrl	699	MA_Baroque _XS	4 / 4	4	88			Harpsichord
ApKb	Genrl	700	MB_Baroque _XS	4 / 4	4	88			:
ApKb	Genrl	701	MC_Baroque _XS	4 / 4	4	88			:
ApKb	Genrl	702	MD_Baroque _XS	4 / 4	4	88			:
ApKb	Genrl	703	FA_Baroque _XS	4 / 4	1	88			:
ApKb	Genrl	704	FB_Baroque _XS	4 / 4	1	88			:
ApKb	Genrl	705	FC_Baroque _XS	4 / 4	1	88			:
ApKb	Genrl	706	FD_Baroque _XS	4 / 4	1	88			:
ApKb	Genrl	707	MA_Pf Arp1	4 / 4	2	64			Acoustic Piano
ApKb	Genrl	708	MA_Pf Arp2	4 / 4	2	74			:
ApKb	Genrl	709	MA_Pf Arp3	4 / 4	2	124			:
ApKb	Genrl	710	MA_Pf Arp4	4 / 4	2	130			:
ApKb	Genrl	711	MA_Pf Arp5	4 / 4	2	130			:
ApKb	Genrl	712	MA_Pf Arp6	4 / 4	2	130			:
ApKb	Genrl	713	MA_Pf Arp7	4 / 4	2	130			:
ApKb	Genrl	714	MA_Pf Arp8	4 / 4	2	65			:
ApKb	Genrl	715	MA_Pf Arp9	4 / 4	1	116			:
ApKb	Genrl	716	MA_Pf Arp10	4 / 4	1	96			:
ApKb	Genrl	717	MA_Pf Arp11	4 / 4	1	82			:
ApKb	Genrl	718	MA_Pf Arp12	4 / 4	1	90			:
ApKb	Genrl	719	MA_Pf Arp13	4 / 4	1	90			:
ApKb	Genrl	720	MA_Pf Arp14	4 / 4	1	90			:
ApKb	Genrl	721	MA_Pf Arp15	4 / 4	1	90			:
ApKb	Genrl	722	MA_Pf Arp16	4 / 4	1	90			:
ApKb	Genrl	723	MA_Pf Arp17	4 / 4	1	100			:
ApKb	Genrl	724	MA_Pf Arp18	4 / 4	1	90			:
ApKb	Genrl	725	MA_Pf Arp19	4 / 4	1	84			:
ApKb	Genrl	726	MA_Pf Arp20	4 / 4	1	90			:
ApKb	Genrl	727	MA_Pf Arp21	4 / 4	1	86			:
ApKb	Genrl	728	MA_Pf Arp22	4 / 4	1	90			:
ApKb	Genrl	729	MA_Pf Arp23	4 / 4	1	90			:
ApKb	Genrl	730	MA_Pf Arp24	4 / 4	2	130			:
ApKb	Genrl	731	MA_Pf Arp25	4 / 4	2	130			:
ApKb	Genrl	732	MA_Pf Arp26	4 / 4	2	130			:
ApKb	Genrl	733	MA_Pf Arp27	4 / 4	2	130			:
ApKb	Genrl	734	MA_Pf Arp28	4 / 4	2	120			:
ApKb	Genrl	735	MA_Pf Arp29	4 / 4	1	74			:
Organ	Rock	736	MA_ProgresRock1 _XS	4 / 4	4	110			Organ
Organ	Rock	737	MB_ProgresRock1 _XS	4 / 4	3	110			:
Organ	Rock	738	MC_ProgresRock1 _XS	4 / 4	4	110			:
Organ	Rock	739	FA_ProgresRock1 _XS	4 / 4	1	110			:
Organ	Rock	740	FB_ProgresRock1 _XS	4 / 4	1	110			:
Organ	Rock	741	FC_ProgresRock1 _XS	4 / 4	1	110			:

Main Category	Sub Category	ARP No.	ARP Name	Time Signature	Length	Original Tempo	Accent	Random SFX	Voice Type
Organ	Rock	742	BA_ProgresRock1 _XS	4 / 4	1	110			Organ
Organ	Rock	743	MA_ProgresRock1 _ES	4 / 4	4	110			:
Organ	Rock	744	MB_ProgresRock1 _ES	4 / 4	3	110			:
Organ	Rock	745	MC_ProgresRock1 _ES	4 / 4	4	110			:
Organ	Rock	746	FA_ProgresRock1 _ES	4 / 4	1	110			:
Organ	Rock	747	FB_ProgresRock1 _ES	4 / 4	1	110			:
Organ	Rock	748	FC_ProgresRock1 _ES	4 / 4	1	110			:
Organ	Rock	749	BA_ProgresRock1 _ES	4 / 4	1	110			:
Organ	Balad	750	MA_6/8 Ballad _XS	6 / 8	4	87			:
Organ	Balad	751	MB_6/8 Ballad _XS	6 / 8	4	87			:
Organ	Balad	752	MC_6/8 Ballad _XS	6 / 8	4	87			:
Organ	Balad	753	FA_6/8 Ballad _XS	6 / 8	1	87			:
Organ	Balad	754	FB_6/8 Ballad _XS	6 / 8	1	87			:
Organ	Balad	755	FC_6/8 Ballad _XS	6 / 8	1	87			:
Organ	Balad	756	BA_6/8 Ballad _XS	6 / 8	1	87			:
Organ	Balad	757	MA_6/8 Ballad _ES	6 / 8	4	87			:
Organ	Balad	758	MB_6/8 Ballad _ES	6 / 8	4	87			:
Organ	Balad	759	MC_6/8 Ballad _ES	6 / 8	4	87			:
Organ	Balad	760	FA_6/8 Ballad _ES	6 / 8	1	87			:
Organ	Balad	761	FB_6/8 Ballad _ES	6 / 8	1	87			:
Organ	Balad	762	FC_6/8 Ballad _ES	6 / 8	1	87			:
Organ	Balad	763	BA_6/8 Ballad _ES	6 / 8	1	87			:
Organ	HipHp	764	MD_Hip Hop 1 _ES	4 / 4	2	105			:
Organ	HipHp	765	FC_Hip Hop 1 _ES	4 / 4	2	105			:
Organ	R&B-C	766	MA_Soul 1 _XS	4 / 4	2	116			:
Organ	R&B-C	767	MB_Soul 1 _XS	4 / 4	2	116			:
Organ	R&B-C	768	MC_Soul 1 _XS	4 / 4	2	116			:
Organ	R&B-C	769	FA_Soul 1 _XS	4 / 4	1	116			:
Organ	R&B-C	770	FB_Soul 1 _XS	4 / 4	1	116			:
Organ	R&B-C	771	FC_Soul 1 _XS	4 / 4	1	116			:
Organ	R&B-C	772	BA_Soul 1 _XS	4 / 4	1	116			:
Organ	R&B-C	773	EA_Soul 1 _XS	4 / 4	4	116			:
Organ	R&B-C	774	EB_Soul 1 _XS	4 / 4	3	116			:
Organ	R&B-C	775	MA_Soul 2	4 / 4	1	120			:
Organ	R&B-C	776	MB_Soul 2	4 / 4	4	120			:
Organ	R&B-C	777	FB_Soul 2 _ES	4 / 4	1	120			:
Organ	Funk	778	MA_Jazz Funk 1 _XS	4 / 4	4	120			:
Organ	Funk	779	MB_Jazz Funk 1 _XS	4 / 4	4	120			:
Organ	Funk	780	MC_Jazz Funk 1 _XS	4 / 4	4	120			:
Organ	Funk	781	FA_Jazz Funk 1 _XS	4 / 4	1	120			:
Organ	Funk	782	FB_Jazz Funk 1 _XS	4 / 4	1	120			:
Organ	Funk	783	FC_Jazz Funk 1 _XS	4 / 4	1	120			:
Organ	Funk	784	BA_Jazz Funk 1 _XS	4 / 4	1	120			:
Organ	Funk	785	EA_Jazz Funk 1 _XS	4 / 4	3	120			:
Organ	Funk	786	EB_Jazz Funk 1 _XS	4 / 4	3	120			:
Organ	Funk	787	MB_Jazz Funk 2	4 / 4	4	120			:
Organ	Funk	788	MA_Funk Organ1*	4 / 4	2	110			:
Organ	Funk	789	MA_Funk Organ2*	4 / 4	2	110			:
Organ	House	790	MA_House Organ1	4 / 4	1	130			:
Organ	House	791	MA_House Organ2	4 / 4	1	130			:
Organ	House	792	MA_House Organ3	4 / 4	1	130			:
Organ	House	793	MA_House Organ4	4 / 4	1	130			:
Organ	House	794	MA_House Organ5	4 / 4	2	126			:
Organ	Jazz	795	MA_Slow Blues 2 _XS	4 / 4	4	72			:
Organ	Jazz	796	MB_Slow Blues 2 _XS	4 / 4	4	72			:
Organ	Jazz	797	MC_Slow Blues 2 _XS	4 / 4	4	72			:
Organ	Jazz	798	FA_Slow Blues 2 _XS	4 / 4	1	72			:
Organ	Jazz	799	FB_Slow Blues 2 _XS	4 / 4	1	72			:
Organ	Jazz	800	FC_Slow Blues 2 _XS	4 / 4	1	72			:
Organ	Jazz	801	BA_Slow Blues 2 _XS	4 / 4	1	72			:
Organ	Jazz	802	MA_Slow Blues 2 _ES	4 / 4	4	72			:
Organ	Jazz	803	MB_Slow Blues 2 _ES	4 / 4	4	72			:
Organ	Jazz	804	MC_Slow Blues 2 _ES	4 / 4	4	72			:
Organ	Jazz	805	FA_Slow Blues 2 _ES	4 / 4	1	72			:
Organ	Jazz	806	FB_Slow Blues 2 _ES	4 / 4	1	72			:
Organ	Jazz	807	FC_Slow Blues 2 _ES	4 / 4	1	72			:
Organ	Jazz	808	BA_Slow Blues 2 _ES	4 / 4	1	72			:
Organ	Latin	809	MA_Latin Rock	4 / 4	2	120			:
Organ	Latin	810	MB_Latin Rock	4 / 4	2	120			:
Organ	Latin	811	MA_Latin Organ	4 / 4	1	110			:
Organ	World	812	MA_Reggae 1	4 / 4	4	102			:
Organ	World	813	MB_Reggae 1	4 / 4	4	102			:
Organ	World	814	MD_Reggae 1	4 / 4	4	90			:
Organ	World	815	FB_Reggae 1	4 / 4	1	102			:
Organ	World	816	MA_Reggae 2	4 / 4	1	92			:
Organ	World	817	MB_Reggae 2	4 / 4	2	92			:
Organ	World	818	MC_Reggae 2	4 / 4	2	92			:
Organ	World	819	MD_Reggae 2	4 / 4	1	92			:
Organ	World	820	IA_Reggae 2	4 / 4	2	92			:
Organ	World	821	FB_Reggae 2	4 / 4	1	92			:
Organ	World	822	MA_ReggaeOrgan1*	4 / 4	2	120			:
Organ	World	823	MA_ReggaeOrgan2*	4 / 4	1	120			:
Organ	World	824	MA_Harmonium _ES	4 / 4	2	140			"India Harmonium"

Main Category	Sub Category	ARP No.	ARP Name	Time Signature	Length	Original Tempo	Accent	Random SFX	Voice Type
Organ	World	825	MB_Harmonium _ES	4 / 4	2	140			"India Harmonium"
Organ	World	826	MC_Harmonium _ES	4 / 4	2	140			:
Organ	World	827	MD_Harmonium _ES	4 / 4	2	140			:
Organ	World	828	ME_Harmonium _ES	4 / 4	2	140			:
GtPl	Rock	829	MA_OverdriveGt1	4 / 4	4	120			Od/Dist Guitar
GtPl	Rock	830	MA_OverdriveGt2 _ES	4 / 4	4	120			:
GtPl	Rock	831	MA_OverdriveGt3 _ES	4 / 4	4	120			:
GtPl	Rock	832	MA_OverdriveGt4 _ES	4 / 4	4	120			:
GtPl	Rock	833	MA_OverdriveGt5 _ES	4 / 4	4	120			:
GtPl	Rock	834	MA_Guitar Over1	1 / 4	4	180			:
GtPl	Rock	835	MA_Guitar Over2 _ES	1 / 4	4	120			:
GtPl	Rock	836	MA_ContempRock _XS	4 / 4	4	126			:
GtPl	Rock	837	MB_ContempRock _XS	4 / 4	4	126			:
GtPl	Rock	838	MC_ContempRock _XS	4 / 4	4	126			:
GtPl	Rock	839	FA_ContempRock _XS	4 / 4	1	126			:
GtPl	Rock	840	FB_ContempRock _XS	4 / 4	1	126			:
GtPl	Rock	841	FC_ContempRock _XS	4 / 4	1	126			:
GtPl	Rock	842	BA_ContempRock _XS	4 / 4	1	126			:
GtPl	Rock	843	EA_ContempRock _XS	4 / 4	4	126			:
GtPl	Rock	844	EB_ContempRock _XS	4 / 4	4	126			:
GtPl	Rock	845	MA1_70s Rock	4 / 4	2	130			Clean Guitar
GtPl	Rock	846	MB1_70s Rock	4 / 4	2	130			:
GtPl	Rock	847	MC1_70s Rock	4 / 4	4	130			:
GtPl	Rock	848	MD1_70s Rock _ES	4 / 4	2	130			:
GtPl	Rock	849	MB2_70s Rock _ES	4 / 4	4	130			Od/Dist Guitar
GtPl	Rock	850	MC2_70s Rock _ES	4 / 4	2	130			:
GtPl	Rock	851	MD2_70s Rock _ES	4 / 4	2	130			:
GtPl	Rock	852	FC2_70s Rock _ES	4 / 4	2	130			:
GtPl	Rock	853	MA3_70s Rock _ES	4 / 4	2	130			:
GtPl	Rock	854	MB3_70s Rock _ES	4 / 4	2	130			:
GtPl	Rock	855	MC3_70s Rock _ES	4 / 4	1	130			:
GtPl	Rock	856	MD3_70s Rock _ES	4 / 4	4	130			:
GtPl	Rock	857	MA_OverTheTop1	4 / 4	2	120			"Over The Top"
GtPl	Rock	858	MA_OverTheTop2	4 / 4	2	120			:
GtPl	Rock	859	MA_OverTheTop3	4 / 4	2	120			:
GtPl	Rock	860	MA_OverTheTop4	4 / 4	4	120			:
GtPl	Rock	861	MA_OverTheTop5	4 / 4	4	120			:
GtPl	Rock	862	MA_AlternaRock1 _ES	4 / 4	4	97			Od/Dist Guitar
GtPl	Rock	863	MB_AlternaRock1 _ES	4 / 4	4	97			:
GtPl	Rock	864	MC_AlternaRock1 _ES	4 / 4	4	97			:
GtPl	Rock	865	FA_AlternaRock1 _ES	4 / 4	1	97			:
GtPl	Rock	866	FB_AlternaRock1 _ES	4 / 4	1	97			:
GtPl	Rock	867	FC_AlternaRock1 _ES	4 / 4	1	97			:
GtPl	Rock	868	BA_AlternaRock1 _ES	4 / 4	1	97			:
GtPl	Rock	869	MA_AlternaRock2 _ES	4 / 4	4	100			:
GtPl	Rock	870	MB_AlternaRock2 _ES	4 / 4	4	100			:
GtPl	Rock	871	MC_AlternaRock2 _ES	4 / 4	4	100			:
GtPl	Rock	872	FA_AlternaRock2 _ES	4 / 4	1	100			:
GtPl	Rock	873	FB_AlternaRock2 _ES	4 / 4	1	100			:
GtPl	Rock	874	FC_AlternaRock2 _ES	4 / 4	1	100			:
GtPl	Rock	875	BA_AlternaRock2 _ES	4 / 4	2	100			:
GtPl	Rock	876	MC1_Xover Rock _ES	4 / 4	2	100			:
GtPl	Rock	877	MD1_Xover Rock _ES	4 / 4	2	100			:
GtPl	Rock	878	FB1_Xover Rock _ES	4 / 4	1	100			:
GtPl	Rock	879	FC1_Xover Rock _ES	4 / 4	2	100			:
GtPl	Rock	880	MA2_Xover Rock _ES	4 / 4	2	100			:
GtPl	Rock	881	MB2_Xover Rock _ES	4 / 4	1	100			:
GtPl	Rock	882	IA2_Xover Rock _ES	4 / 4	2	100			Clean Guitar
GtPl	Rock	883	FA2_Xover Rock _ES	4 / 4	1	100			:
GtPl	Rock	884	MA1_8Beat Rock _XS	4 / 4	4	75			:
GtPl	Rock	885	MB1_8Beat Rock _XS	4 / 4	4	75			:
GtPl	Rock	886	MC1_8Beat Rock _XS	4 / 4	4	75			:
GtPl	Rock	887	FA1_8Beat Rock _XS	4 / 4	1	75			:
GtPl	Rock	888	FB1_8Beat Rock _XS	4 / 4	1	75			:
GtPl	Rock	889	FC1_8Beat Rock _XS	4 / 4	1	75			:
GtPl	Rock	890	BA1_8Beat Rock _XS	4 / 4	1	75			:
GtPl	Rock	891	MA1_8Beat Rock _ES	4 / 4	4	75			:
GtPl	Rock	892	MB1_8Beat Rock _ES	4 / 4	4	75			:
GtPl	Rock	893	MC1_8Beat Rock _ES	4 / 4	4	75			:
GtPl	Rock	894	FA1_8Beat Rock _ES	4 / 4	1	75			:
GtPl	Rock	895	FB1_8Beat Rock _ES	4 / 4	1	75			:
GtPl	Rock	896	FC1_8Beat Rock _ES	4 / 4	1	75			:
GtPl	Rock	897	BA1_8Beat Rock _ES	4 / 4	1	75			:
GtPl	Rock	898	MA2_8Beat Rock _XS	4 / 4	4	75			Od/Dist Guitar
GtPl	Rock	899	MB2_8Beat Rock _XS	4 / 4	4	75			:
GtPl	Rock	900	MC2_8Beat Rock _XS	4 / 4	4	75			:
GtPl	Rock	901	FA2_8Beat Rock _XS	4 / 4	1	75			:
GtPl	Rock	902	FB2_8Beat Rock _XS	4 / 4	1	75			:
GtPl	Rock	903	FC2_8Beat Rock _XS	4 / 4	1	75			:
GtPl	Rock	904	BA2_8Beat Rock _XS	4 / 4	1	75			:
GtPl	Rock	905	MA2_8Beat Rock _ES	4 / 4	4	75			:
GtPl	Rock	906	MB2_8Beat Rock _ES	4 / 4	4	75			:
GtPl	Rock	907	MC2_8Beat Rock _ES	4 / 4	4	75			:

Main Category	Sub Category	ARP No.	ARP Name	Time Signature	Length	Original Tempo	Accent	Random SFX	Voice Type
GtPl	Rock	908	FA2_8Beat Rock _ES	4 / 4	1	75			Od/Dist Guitar
GtPl	Rock	909	FB2_8Beat Rock _ES	4 / 4	1	75			:
GtPl	Rock	910	FC2_8Beat Rock _ES	4 / 4	1	75			:
GtPl	Rock	911	BA2_8Beat Rock _ES	4 / 4	1	75			:
GtPl	Rock	912	MA_16Beat Rock _XS	4 / 4	4	86			"Over The Top"
GtPl	Rock	913	MB_16Beat Rock _XS	4 / 4	4	86			:
GtPl	Rock	914	MC_16Beat Rock _XS	4 / 4	4	86			:
GtPl	Rock	915	FA_16Beat Rock _XS	4 / 4	1	86			:
GtPl	Rock	916	FB_16Beat Rock _XS	4 / 4	1	86			:
GtPl	Rock	917	FC_16Beat Rock _XS	4 / 4	1	86			:
GtPl	Rock	918	BA_16Beat Rock _XS	4 / 4	1	86			:
GtPl	Rock	919	MA_16Beat Rock	4 / 4	4	86			:
GtPl	Rock	920	MB_16Beat Rock _ES	4 / 4	4	86			:
GtPl	Rock	921	MC_16Beat Rock _ES	4 / 4	4	86			:
GtPl	Rock	922	FA_16Beat Rock	4 / 4	1	86			:
GtPl	Rock	923	FB_16Beat Rock _ES	4 / 4	1	86			:
GtPl	Rock	924	FC_16Beat Rock _ES	4 / 4	1	86			:
GtPl	Rock	925	BA_16Beat Rock _ES	4 / 4	1	86			:
GtPl	Rock	926	MA_ProgresRock1 _XS	4 / 4	4	110			"DriveWah (2handGtr)"
GtPl	Rock	927	MB_ProgresRock1 _XS	4 / 4	3	110			:
GtPl	Rock	928	MC_ProgresRock1 _XS	4 / 4	4	110			:
GtPl	Rock	929	FA_ProgresRock1 _XS	4 / 4	1	110			:
GtPl	Rock	930	FB_ProgresRock1 _XS	4 / 4	1	110			:
GtPl	Rock	931	FC_ProgresRock1 _XS	4 / 4	1	110			:
GtPl	Rock	932	BA_ProgresRock1 _XS	4 / 4	1	110			:
GtPl	Rock	933	MA_ProgresRock1 _ES	4 / 4	4	110			:
GtPl	Rock	934	MB_ProgresRock1 _ES	4 / 4	3	110			:
GtPl	Rock	935	MC_ProgresRock1 _ES	4 / 4	4	110			:
GtPl	Rock	936	FA_ProgresRock1 _ES	4 / 4	1	110			:
GtPl	Rock	937	FB_ProgresRock1 _ES	4 / 4	1	110			:
GtPl	Rock	938	FC_ProgresRock1 _ES	4 / 4	1	110			:
GtPl	Rock	939	BA_ProgresRock1 _ES	4 / 4	1	110			:
GtPl	Rock	940	MA_ProgresRock2 _XS	4 / 4	4	120			Clean Guitar
GtPl	Rock	941	MB_ProgresRock2 _XS	4 / 4	4	120			:
GtPl	Rock	942	MC_ProgresRock2 _XS	4 / 4	4	120			:
GtPl	Rock	943	FA_ProgresRock2 _XS	4 / 4	1	120			:
GtPl	Rock	944	FB_ProgresRock2 _XS	4 / 4	1	120			:
GtPl	Rock	945	FC_ProgresRock2 _XS	4 / 4	1	120			:
GtPl	Rock	946	BA_ProgresRock2 _XS	4 / 4	1	120			:
GtPl	Rock	947	MA_ProgresRock2 _ES	4 / 4	4	120			:
GtPl	Rock	948	MB_ProgresRock2 _ES	4 / 4	4	120			:
GtPl	Rock	949	MC_ProgresRock2 _ES	4 / 4	4	120			:
GtPl	Rock	950	FA_ProgresRock2 _ES	4 / 4	1	120			:
GtPl	Rock	951	FB_ProgresRock2 _ES	4 / 4	1	120			:
GtPl	Rock	952	FC_ProgresRock2 _ES	4 / 4	1	120			:
GtPl	Rock	953	BA_ProgresRock2 _ES	4 / 4	1	120			:
GtPl	Rock	954	MA_Rock Guitar1	4 / 4	1	120			Od/Dist Guitar
GtPl	Rock	955	MA_Rock Guitar2	4 / 4	1	120			:
GtPl	Rock	956	MA_Rock Guitar3	4 / 4	1	120			:
GtPl	PopRk	957	MA_Guitar Pop 1 _XS	4 / 4	4	100			Acoustic Guitar
GtPl	PopRk	958	MB_Guitar Pop 1 _XS	4 / 4	4	100			:
GtPl	PopRk	959	MC_Guitar Pop 1 _XS	4 / 4	4	100			:
GtPl	PopRk	960	FA_Guitar Pop 1 _XS	4 / 4	1	100			:
GtPl	PopRk	961	FB_Guitar Pop 1 _XS	4 / 4	1	100			:
GtPl	PopRk	962	FC_Guitar Pop 1 _XS	4 / 4	1	100			:
GtPl	PopRk	963	BA_Guitar Pop 1 _XS	4 / 4	1	100			:
GtPl	PopRk	964	EA_Guitar Pop 1 _XS	4 / 4	3	100			:
GtPl	PopRk	965	EB_Guitar Pop 1 _XS	4 / 4	3	100			:
GtPl	PopRk	966	MA1_Guitar Pop 2	4 / 4	2	90			:
GtPl	PopRk	967	MA1_Guitar Pop 2 AF2	4 / 4	2	90			Aco Guitar / Syn Pad
GtPl	PopRk	968	MB1_Guitar Pop 2	4 / 4	1	90			Acoustic Guitar
GtPl	PopRk	969	MC1_Guitar Pop 2	4 / 4	2	90			:
GtPl	PopRk	970	IA1_Guitar Pop 2	4 / 4	1	90			:
GtPl	PopRk	971	MA2_Guitar Pop 2	4 / 4	1	90			:
GtPl	PopRk	972	IA2_Guitar Pop 2	4 / 4	1	90			Clean Guitar
GtPl	PopRk	973	MA1_FingerPickin _ES	4 / 4	2	120			Acoustic Guitar
GtPl	PopRk	974	MB1_FingerPickin _ES	4 / 4	2	120			:
GtPl	PopRk	975	MC1_FingerPickin _ES	4 / 4	2	120			:
GtPl	PopRk	976	MD1_FingerPickin _ES	4 / 4	3	120			:
GtPl	PopRk	977	IA1_FingerPickin	4 / 4	1	120			:
GtPl	PopRk	978	FA1_FingerPickin _ES	4 / 4	1	120			:
GtPl	PopRk	979	FB1_FingerPickin _ES	4 / 4	1	120			:
GtPl	PopRk	980	MA2_FingerPickin	4 / 4	2	120			:
GtPl	PopRk	981	MB2_FingerPickin	4 / 4	2	120			:
GtPl	PopRk	982	MC2_FingerPickin	4 / 4	2	120			:
GtPl	PopRk	983	MD2_FingerPickin	4 / 4	2	120			:
GtPl	PopRk	984	IA2_FingerPickin	4 / 4	2	120			:
GtPl	PopRk	985	FA2_FingerPickin	4 / 4	1	120			:
GtPl	PopRk	986	FB2_FingerPickin	4 / 4	1	120			:
GtPl	PopRk	987	MA_Pickin1	4 / 4	3	120			:
GtPl	PopRk	988	MA_Pickin2	4 / 4	2	120			:
GtPl	PopRk	989	MA_Pickin3	4 / 4	2	120			:
GtPl	PopRk	990	MA1_Folk Rock _ES	4 / 4	2	120			:

Main Category	Sub Category	ARP No.	ARP Name	Time Signature	Length	Original Tempo	Accent	Random SFX	Voice Type
GtPl	PopRk	991	MB1_Folk Rock _ES	4 / 4	2	120			Acoustic Guitar
GtPl	PopRk	992	IA1_Folk Rock _ES	4 / 4	1	120			:
GtPl	PopRk	993	IA1_FolkRock AF1 _ES	4 / 4	1	80			:
GtPl	PopRk	994	IA1_FolkRck AF1&2_ES	4 / 4	1	80			:
GtPl	PopRk	995	MA2_Folk Rock _ES	4 / 4	2	120			:
GtPl	PopRk	996	MB2_Folk Rock _ES	4 / 4	2	120			:
GtPl	PopRk	997	MC2_Folk Rock _ES	4 / 4	2	120			:
GtPl	PopRk	998	IA2_Folk Rock _ES	4 / 4	1	120			:
GtPl	PopRk	999	IA2_FolkRck AF1 _ES	4 / 4	1	80			:
GtPl	PopRk	1000	MC3_Folk Rock _ES	4 / 4	2	120			Clean Guitar
GtPl	PopRk	1001	MD3_Folk Rock _ES	4 / 4	2	120			:
GtPl	PopRk	1002	FA3_Folk Rock _ES	4 / 4	1	120			:
GtPl	PopRk	1003	MA_12 GuitarA1 _ES	4 / 4	4	120			Acoustic Guitar
GtPl	PopRk	1004	MA_12 GuitarA2 _ES	4 / 4	4	120			:
GtPl	PopRk	1005	MA_12 GuitarA3 _ES	4 / 4	4	120			:
GtPl	PopRk	1006	MA_12 GuitarA4 _ES	4 / 4	4	120			:
GtPl	PopRk	1007	MA_12 GuitarA5 _ES	4 / 4	4	120			:
GtPl	PopRk	1008	MA_12 GuitarB1	4 / 4	1	97			:
GtPl	PopRk	1009	MA_12 GuitarB2	4 / 4	1	100			:
GtPl	PopRk	1010	MA_Worship Fast _XS	4 / 4	8	114			:
GtPl	PopRk	1011	MB_Worship Fast _XS	4 / 4	4	114			:
GtPl	PopRk	1012	MC_Worship Fast _XS	4 / 4	4	114			:
GtPl	PopRk	1013	FA_Worship Fast _XS	4 / 4	1	114			:
GtPl	PopRk	1014	FB_Worship Fast _XS	4 / 4	1	114			:
GtPl	PopRk	1015	FC_Worship Fast _XS	4 / 4	1	114			:
GtPl	PopRk	1016	BA_Worship Fast _XS	4 / 4	1	114			:
GtPl	PopRk	1017	EA_Worship Fast _XS	4 / 4	4	114			:
GtPl	PopRk	1018	EB_Worship Fast _XS	4 / 4	2	114			:
GtPl	PopRk	1019	MA_New Country _XS	4 / 4	2	118			:
GtPl	PopRk	1020	MB_New Country _XS	4 / 4	4	118			:
GtPl	PopRk	1021	MC_New Country _XS	4 / 4	2	118			:
GtPl	PopRk	1022	FA_New Country _XS	4 / 4	1	118			:
GtPl	PopRk	1023	FB_New Country _XS	4 / 4	1	118			:
GtPl	PopRk	1024	FC_New Country _XS	4 / 4	1	118			:
GtPl	PopRk	1025	BA_New Country _XS	4 / 4	1	118			:
GtPl	PopRk	1026	EA_New Country _XS	4 / 4	4	118			:
GtPl	PopRk	1027	EB_New Country _XS	4 / 4	4	118			:
GtPl	PopRk	1028	MA_New Country	4 / 4	2	118			:
GtPl	PopRk	1029	MB_New Country	4 / 4	4	118			:
GtPl	PopRk	1030	MC_New Country	4 / 4	2	118			:
GtPl	PopRk	1031	FA_New Country	4 / 4	1	118			:
GtPl	PopRk	1032	FB_New Country	4 / 4	1	118			:
GtPl	PopRk	1033	FC_New Country	4 / 4	1	118			:
GtPl	PopRk	1034	BA_New Country	4 / 4	1	118			:
GtPl	PopRk	1035	MA_BritPopSwing _XS	4 / 4	2	110			Clean Guitar
GtPl	PopRk	1036	MB_BritPopSwing _XS	4 / 4	2	110			:
GtPl	PopRk	1037	MC_BritPopSwing _XS	4 / 4	2	110			:
GtPl	PopRk	1038	FA_BritPopSwing _XS	4 / 4	1	110			:
GtPl	PopRk	1039	FB_BritPopSwing _XS	4 / 4	1	110			:
GtPl	PopRk	1040	FC_BritPopSwing _XS	4 / 4	1	110			:
GtPl	PopRk	1041	BA_BritPopSwing _XS	4 / 4	1	110			:
GtPl	PopRk	1042	EA_BritPopSwing _XS	4 / 4	4	110			:
GtPl	PopRk	1043	EB_BritPopSwing _XS	4 / 4	4	110			:
GtPl	PopRk	1044	MA_8Beat Basic _XS	4 / 4	4	120			:
GtPl	PopRk	1045	MB_8Beat Basic _XS	4 / 4	4	120			:
GtPl	PopRk	1046	MC_8Beat Basic _XS	4 / 4	4	120			:
GtPl	PopRk	1047	FA_8Beat Basic _XS	4 / 4	1	120			:
GtPl	PopRk	1048	FB_8Beat Basic _XS	4 / 4	1	120			:
GtPl	PopRk	1049	FC_8Beat Basic _XS	4 / 4	1	120			:
GtPl	PopRk	1050	BA_8Beat Basic _XS	4 / 4	1	120			:
GtPl	PopRk	1051	MA_8Beat Basic _ES	4 / 4	4	120			:
GtPl	PopRk	1052	MB_8Beat Basic _ES	4 / 4	4	120			:
GtPl	PopRk	1053	MC_8Beat Basic _ES	4 / 4	4	120			:
GtPl	PopRk	1054	FA_8Beat Basic _ES	4 / 4	1	120			:
GtPl	PopRk	1055	FB_8Beat Basic _ES	4 / 4	1	120			:
GtPl	PopRk	1056	FC_8Beat Basic _ES	4 / 4	1	120			:
GtPl	PopRk	1057	BA_8Beat Basic _ES	4 / 4	1	120			:
GtPl	PopRk	1058	MA_8Beat Soft _XS	4 / 4	4	100			Acoustic Guitar
GtPl	PopRk	1059	MB_8Beat Soft _XS	4 / 4	4	100			:
GtPl	PopRk	1060	MC_8Beat Soft _XS	4 / 4	4	100			:
GtPl	PopRk	1061	FA_8Beat Soft _XS	4 / 4	1	100			:
GtPl	PopRk	1062	FB_8Beat Soft _XS	4 / 4	1	100			:
GtPl	PopRk	1063	FC_8Beat Soft _XS	4 / 4	1	100			:
GtPl	PopRk	1064	BA_8Beat Soft _XS	4 / 4	1	100			:
GtPl	PopRk	1065	MA_8Beat Soft _ES	4 / 4	4	100			:
GtPl	PopRk	1066	MB_8Beat Soft _ES	4 / 4	4	100			:
GtPl	PopRk	1067	MC_8Beat Soft _ES	4 / 4	4	100			:
GtPl	PopRk	1068	FA_8Beat Soft _ES	4 / 4	1	100			:
GtPl	PopRk	1069	FB_8Beat Soft _ES	4 / 4	1	100			:
GtPl	PopRk	1070	FC_8Beat Soft _ES	4 / 4	1	100			:
GtPl	PopRk	1071	BA_8Beat Soft _ES	4 / 4	1	100			:
GtPl	PopRk	1072	MA1_Soft Rock _ES	4 / 4	4	120			:
GtPl	PopRk	1073	MB1_Soft Rock _ES	4 / 4	4	120			:

Main Category	Sub Category	ARP No.	ARP Name	Time Signature	Length	Original Tempo	Accent	Random SFX	Voice Type
GtPl	PopRk	1074	MC1_Soft Rock _ES	4 / 4	2	120			Acoustic Guitar
GtPl	PopRk	1075	MD1_Soft Rock _ES	4 / 4	2	120			:
GtPl	PopRk	1076	IA1_Soft Rock _ES	4 / 4	1	120			:
GtPl	PopRk	1077	FA1_Soft Rock _ES	4 / 4	1	120			:
GtPl	PopRk	1078	FB1_Soft Rock _ES	4 / 4	1	120			:
GtPl	PopRk	1079	MD2_Soft Rock _ES	4 / 4	2	120			Od/Dist Guitar
GtPl	PopRk	1080	FB2_Soft Rock _ES	4 / 4	1	120			:
GtPl	PopRk	1081	MA_16BeatBasic1 _XS	4 / 4	4	90			Clean Guitar
GtPl	PopRk	1082	MB_16BeatBasic1 _XS	4 / 4	4	90			:
GtPl	PopRk	1083	MC_16BeatBasic1 _XS	4 / 4	4	90			:
GtPl	PopRk	1084	FA_16BeatBasic1 _XS	4 / 4	1	90			:
GtPl	PopRk	1085	FB_16BeatBasic1 _XS	4 / 4	1	90			:
GtPl	PopRk	1086	FC_16BeatBasic1 _XS	4 / 4	1	90			:
GtPl	PopRk	1087	BA_16BeatBasic1 _XS	4 / 4	1	90			:
GtPl	PopRk	1088	MA_16BeatBasic1 _ES	4 / 4	4	90			:
GtPl	PopRk	1089	MB_16BeatBasic1 _ES	4 / 4	4	90			:
GtPl	PopRk	1090	MC_16BeatBasic1 _ES	4 / 4	4	90			:
GtPl	PopRk	1091	FA_16BeatBasic1 _ES	4 / 4	1	90			:
GtPl	PopRk	1092	FB_16BeatBasic1 _ES	4 / 4	1	90			:
GtPl	PopRk	1093	FC_16BeatBasic1 _ES	4 / 4	1	90			:
GtPl	PopRk	1094	BA_16BeatBasic1 _ES	4 / 4	1	90			:
GtPl	PopRk	1095	MA_Analog Pop	4 / 4	2	93			:
GtPl	PopRk	1096	MC_Analog Pop	4 / 4	1	93			:
GtPl	PopRk	1097	IA_Analog Pop	4 / 4	1	93			:
GtPl	PopRk	1098	MA_6/8 Pop _XS	4 / 4	4	100			Od/Dist Guitar
GtPl	PopRk	1099	MB_6/8 Pop _XS	4 / 4	4	100			:
GtPl	PopRk	1100	MC_6/8 Pop _XS	4 / 4	4	100			:
GtPl	PopRk	1101	FA_6/8 Pop _XS	4 / 4	1	100			:
GtPl	PopRk	1102	FB_6/8 Pop _XS	4 / 4	1	100			:
GtPl	PopRk	1103	FC_6/8 Pop _XS	4 / 4	1	100			:
GtPl	PopRk	1104	BA_6/8 Pop _XS	4 / 4	1	100			:
GtPl	PopRk	1105	EA_6/8 Pop _XS	4 / 4	3	123			:
GtPl	PopRk	1106	MA_6/8 Pop _ES	4 / 4	4	100			:
GtPl	PopRk	1107	MB_6/8 Pop _ES	4 / 4	4	100			:
GtPl	PopRk	1108	MC_6/8 Pop _ES	4 / 4	4	100			:
GtPl	PopRk	1109	FA_6/8 Pop _ES	4 / 4	1	100			:
GtPl	PopRk	1110	FB_6/8 Pop _ES	4 / 4	1	100			:
GtPl	PopRk	1111	FC_6/8 Pop _ES	4 / 4	1	100			:
GtPl	PopRk	1112	BA_6/8 Pop _ES	4 / 4	1	100			:
GtPl	Balad	1113	MA_Unplugged 3 _XS	4 / 4	4	113			Acoustic Guitar
GtPl	Balad	1114	MB_Unplugged 3 _XS	4 / 4	4	113			:
GtPl	Balad	1115	MC_Unplugged 3 _XS	4 / 4	4	113			:
GtPl	Balad	1116	FA_Unplugged 3 _XS	4 / 4	1	113			:
GtPl	Balad	1117	FB_Unplugged 3 _XS	4 / 4	1	113			:
GtPl	Balad	1118	FC_Unplugged 3 _XS	4 / 4	1	113			:
GtPl	Balad	1119	BA_Unplugged 3 _XS	4 / 4	1	113			:
GtPl	Balad	1120	MA_Unplugged 3 _ES	4 / 4	4	113			:
GtPl	Balad	1121	MB_Unplugged 3 _ES	4 / 4	4	113			:
GtPl	Balad	1122	MC_Unplugged 3 _ES	4 / 4	4	113			:
GtPl	Balad	1123	FA_Unplugged 3 _ES	4 / 4	1	113			:
GtPl	Balad	1124	FB_Unplugged 3 _ES	4 / 4	1	113			:
GtPl	Balad	1125	FC_Unplugged 3 _ES	4 / 4	1	113			:
GtPl	Balad	1126	BA_Unplugged 3 _ES	4 / 4	1	113			:
GtPl	Balad	1127	MA_Unplugged 4	4 / 4	4	120			:
GtPl	Balad	1128	MB_Unplugged 4	4 / 4	2	120			:
GtPl	Balad	1129	MC_Unplugged 4	4 / 4	2	120			:
GtPl	Balad	1130	MD_Unplugged 4	4 / 4	2	120			:
GtPl	Balad	1131	FA_Unplugged 4	4 / 4	1	120			:
GtPl	Balad	1132	FB_Unplugged 4	4 / 4	1	120			:
GtPl	Balad	1133	EA_Unplugged 4	4 / 4	4	120			:
GtPl	Balad	1134	EB_Unplugged 4	4 / 4	3	120			:
GtPl	Balad	1135	MA_8Beat Ballad _XS	4 / 4	4	101			:
GtPl	Balad	1136	MB_8Beat Ballad _XS	4 / 4	4	101			:
GtPl	Balad	1137	MC_8Beat Ballad _XS	4 / 4	4	101			:
GtPl	Balad	1138	FA_8Beat Ballad _XS	4 / 4	1	101			:
GtPl	Balad	1139	FB_8Beat Ballad _XS	4 / 4	1	101			:
GtPl	Balad	1140	FC_8Beat Ballad _XS	4 / 4	1	101			:
GtPl	Balad	1141	BA_8Beat Ballad _XS	4 / 4	1	101			:
GtPl	Balad	1142	EA_8Beat Ballad _XS	4 / 4	5	101			:
GtPl	Balad	1143	EB_8Beat Ballad _XS	4 / 4	5	101			:
GtPl	Balad	1144	MA_8Beat Ballad	4 / 4	4	101			:
GtPl	Balad	1145	MB_8Beat Ballad	4 / 4	4	101			:
GtPl	Balad	1146	MC_8Beat Ballad	4 / 4	4	101			:
GtPl	Balad	1147	FA_8Beat Ballad	4 / 4	1	101			:
GtPl	Balad	1148	FB_8Beat Ballad	4 / 4	1	101			:
GtPl	Balad	1149	FC_8Beat Ballad	4 / 4	1	101			:
GtPl	Balad	1150	BA_8Beat Ballad	4 / 4	1	101			:
GtPl	Balad	1151	MA_Slowfeel	4 / 4	1	74			:
GtPl	Balad	1152	MB_Slowfeel	4 / 4	1	74			:
GtPl	Balad	1153	MC_Slowfeel	4 / 4	1	74			Clean Guitar
GtPl	Balad	1154	MA_16Bt Ballad1 _XS	4 / 4	4	75			:
GtPl	Balad	1155	MB_16Bt Ballad1 _XS	4 / 4	4	75			:
GtPl	Balad	1156	MC_16Bt Ballad1 _XS	4 / 4	4	75			:

Main Category	Sub Category	ARP No.	ARP Name	Time Signature	Length	Original Tempo	Accent	Random SFX	Voice Type
GtPl	Balad	1157	FA_16Bt Ballad1 _XS	4 / 4	1	75			Clean Guitar
GtPl	Balad	1158	FB_16Bt Ballad1 _XS	4 / 4	1	75			:
GtPl	Balad	1159	FC_16Bt Ballad1 _XS	4 / 4	1	75			:
GtPl	Balad	1160	BA_16Bt Ballad1 _XS	4 / 4	1	75			:
GtPl	Balad	1161	MA_16Bt Ballad1 _ES	4 / 4	4	75			:
GtPl	Balad	1162	MB_16Bt Ballad1 _ES	4 / 4	4	75			:
GtPl	Balad	1163	MC_16Bt Ballad1 _ES	4 / 4	4	75			:
GtPl	Balad	1164	FA_16Bt Ballad1 _ES	4 / 4	1	75			:
GtPl	Balad	1165	FB_16Bt Ballad1 _ES	4 / 4	1	75			:
GtPl	Balad	1166	FC_16Bt Ballad1 _ES	4 / 4	1	75			:
GtPl	Balad	1167	BA_16Bt Ballad1 _ES	4 / 4	1	75			:
GtPl	Balad	1168	MA_6/8 Ballad _XS	6 / 8	4	87			Od/Dist Guitar
GtPl	Balad	1169	MB_6/8 Ballad _XS	6 / 8	4	87			:
GtPl	Balad	1170	MC_6/8 Ballad _XS	6 / 8	4	87			:
GtPl	Balad	1171	FA_6/8 Ballad _XS	6 / 8	1	87			:
GtPl	Balad	1172	FB_6/8 Ballad _XS	6 / 8	1	87			:
GtPl	Balad	1173	FC_6/8 Ballad _XS	6 / 8	1	87			:
GtPl	Balad	1174	BA_6/8 Ballad _XS	6 / 8	1	87			:
GtPl	Balad	1175	EA_6/8 Ballad _XS	6 / 8	6	87			:
GtPl	Balad	1176	EB_6/8 Ballad _XS	6 / 8	6	87			:
GtPl	Balad	1177	MA_6/8 Ballad _ES	6 / 8	4	87			:
GtPl	Balad	1178	MB_6/8 Ballad _ES	6 / 8	4	87			:
GtPl	Balad	1179	MC_6/8 Ballad _ES	6 / 8	4	87			:
GtPl	Balad	1180	FA_6/8 Ballad _ES	6 / 8	1	87			:
GtPl	Balad	1181	FB_6/8 Ballad _ES	6 / 8	1	87			:
GtPl	Balad	1182	FC_6/8 Ballad _ES	6 / 8	1	87			:
GtPl	Balad	1183	BA_6/8 Ballad _ES	6 / 8	1	87			:
GtPl	HipHp	1184	MA_Hip Hop 2 _ES	4 / 4	2	94			Mute Guitar
GtPl	HipHp	1185	MC_Hip Hop 2 _ES	4 / 4	2	94			:
GtPl	HipHp	1186	MD_Hip Hop 2 _ES	4 / 4	2	94			:
GtPl	HipHp	1187	IA_Hip Hop 2 _ES	4 / 4	2	94			:
GtPl	HipHp	1188	MA1_Hip Hop 3	4 / 4	2	104			Acoustic Guitar
GtPl	HipHp	1189	MB1_Hip Hop 3	4 / 4	2	104			:
GtPl	HipHp	1190	MC1_Hip Hop 3	4 / 4	2	104			:
GtPl	HipHp	1191	MD1_Hip Hop 3	4 / 4	2	104			:
GtPl	HipHp	1192	FC1_Hip Hop 3	4 / 4	2	104			:
GtPl	HipHp	1193	MA2_Hip Hop 3 _ES	4 / 4	2	104			Mute Guitar
GtPl	HipHp	1194	MB2_Hip Hop 3 _ES	4 / 4	2	104			:
GtPl	HipHp	1195	MD2_Hip Hop 3 _ES	4 / 4	2	104			:
GtPl	HipHp	1196	FA2_Hip Hop 3 _ES	4 / 4	1	104			:
GtPl	HipHp	1197	FC2_Hip Hop 3 _ES	4 / 4	2	104			:
GtPl	HipHp	1198	MA1_Hip Hop 6 _XS	4 / 4	4	96			Acoustic Guitar
GtPl	HipHp	1199	MB1_Hip Hop 6 _XS	4 / 4	4	96			:
GtPl	HipHp	1200	MC1_Hip Hop 6 _XS	4 / 4	4	96			:
GtPl	HipHp	1201	FA1_Hip Hop 6 _XS	4 / 4	1	96			:
GtPl	HipHp	1202	FB1_Hip Hop 6 _XS	4 / 4	1	96			:
GtPl	HipHp	1203	FC1_Hip Hop 6 _XS	4 / 4	1	96			:
GtPl	HipHp	1204	BA1_Hip Hop 6 _XS	4 / 4	1	96			:
GtPl	HipHp	1205	MA2_Hip Hop 6 _XS	4 / 4	4	96			Od/Dist Guitar
GtPl	HipHp	1206	MB2_Hip Hop 6 _XS	4 / 4	4	96			:
GtPl	HipHp	1207	MC2_Hip Hop 6 _XS	4 / 4	4	96			:
GtPl	HipHp	1208	FA2_Hip Hop 6 _XS	4 / 4	1	96			:
GtPl	HipHp	1209	FB2_Hip Hop 6 _XS	4 / 4	1	96			:
GtPl	HipHp	1210	FC2_Hip Hop 6 _XS	4 / 4	1	96			:
GtPl	HipHp	1211	BA2_Hip Hop 6 _XS	4 / 4	1	96			:
GtPl	HipHp	1212	MA_Hip Rock 1 _XS	4 / 4	4	90			:
GtPl	HipHp	1213	MB_Hip Rock 1 _XS	4 / 4	4	90			:
GtPl	HipHp	1214	MC_Hip Rock 1 _XS	4 / 4	4	90			:
GtPl	HipHp	1215	FA_Hip Rock 1 _XS	4 / 4	1	90			:
GtPl	HipHp	1216	FB_Hip Rock 1 _XS	4 / 4	1	90			:
GtPl	HipHp	1217	FC_Hip Rock 1 _XS	4 / 4	1	90			:
GtPl	HipHp	1218	MA_Hip Rock 2 _XS	4 / 4	4	132			:
GtPl	HipHp	1219	MB_Hip Rock 2 _XS	4 / 4	4	132			:
GtPl	HipHp	1220	MC_Hip Rock 2 _XS	4 / 4	4	132			:
GtPl	HipHp	1221	FA_Hip Rock 2 _XS	4 / 4	1	132			:
GtPl	HipHp	1222	FB_Hip Rock 2 _XS	4 / 4	1	132			:
GtPl	HipHp	1223	FC_Hip Rock 2 _XS	4 / 4	1	132			:
GtPl	HipHp	1224	BA_Hip Rock 2 _XS	4 / 4	1	132			:
GtPl	HipHp	1225	MB1_ClasicHipHop _ES	4 / 4	2	90			Clean Guitar
GtPl	HipHp	1226	MC1_ClasicHipHop _ES	4 / 4	2	90			:
GtPl	HipHp	1227	MA2_ClasicHipHop	4 / 4	2	90			:
GtPl	HipHp	1228	MB2_ClasicHipHop	4 / 4	2	90			:
GtPl	HipHp	1229	MC2_ClasicHipHop	4 / 4	2	90			:
GtPl	HipHp	1230	IA2_ClasicHipHop	4 / 4	4	90			:
GtPl	HipHp	1231	MD3_ClasicHipHop	4 / 4	2	90			:
GtPl	HipHp	1232	FC3_ClasicHipHop _ES	4 / 4	2	90			:
GtPl	R&B-M	1233	MA_Pop Shuffle1 _XS	4 / 4	4	94			:
GtPl	R&B-M	1234	MB_Pop Shuffle1 _XS	4 / 4	4	94			:
GtPl	R&B-M	1235	MC_Pop Shuffle1 _XS	4 / 4	4	94			:
GtPl	R&B-M	1236	FA_Pop Shuffle1 _XS	4 / 4	1	94			:
GtPl	R&B-M	1237	FB_Pop Shuffle1 _XS	4 / 4	1	94			:
GtPl	R&B-M	1238	FC_Pop Shuffle1 _XS	4 / 4	1	94			:
GtPl	R&B-M	1239	BA_Pop Shuffle1 _XS	4 / 4	1	94			:

Main Category	Sub Category	ARP No.	ARP Name	Time Signature	Length	Original Tempo	Accent	Random SFX	Voice Type
GtPl	R&B-M	1240	MA_Pop Shuffle1 _ES	4 / 4	4	94			Clean Guitar
GtPl	R&B-M	1241	MB_Pop Shuffle1 _ES	4 / 4	4	94			:
GtPl	R&B-M	1242	MC_Pop Shuffle1 _ES	4 / 4	4	94			:
GtPl	R&B-M	1243	FA_Pop Shuffle1 _ES	4 / 4	1	94			:
GtPl	R&B-M	1244	FB_Pop Shuffle1 _ES	4 / 4	1	94			:
GtPl	R&B-M	1245	FC_Pop Shuffle1 _ES	4 / 4	1	94			:
GtPl	R&B-M	1246	BA_Pop Shuffle1 _ES	4 / 4	1	94			:
GtPl	R&B-M	1247	MB_R&B Disco _ES	4 / 4	2	110			Mute Guitar
GtPl	R&B-M	1248	MC_R&B Disco _ES	4 / 4	2	110			:
GtPl	R&B-M	1249	MD_R&B Disco _ES	4 / 4	2	110			:
GtPl	R&B-M	1250	FB_R&B Disco _ES	4 / 4	1	110			:
GtPl	R&B-M	1251	FC_R&B Disco _ES	4 / 4	2	110			:
GtPl	R&B-M	1252	MA_New R&B 2	4 / 4	1	97			Acoustic Guitar
GtPl	R&B-M	1253	MB_New R&B 2	4 / 4	1	123			:
GtPl	R&B-M	1254	MC_New R&B 2	4 / 4	1	97			:
GtPl	R&B-M	1255	IA_New R&B 2 _ES	4 / 4	2	97			:
GtPl	R&B-M	1256	FA_New R&B 2	4 / 4	1	97			:
GtPl	R&B-M	1257	FB_New R&B 2	4 / 4	1	97			:
GtPl	R&B-M	1258	MA_New R&B 3	4 / 4	2	90			:
GtPl	R&B-M	1259	MB_New R&B 3	4 / 4	2	90			:
GtPl	R&B-M	1260	MC_New R&B 3 _ES	4 / 4	2	90			:
GtPl	R&B-M	1261	MD_New R&B 3	4 / 4	2	90			:
GtPl	R&B-M	1262	MA_Pop R&B _XS	4 / 4	4	67			"Hip-Hop Nylon Guitar"
GtPl	R&B-M	1263	MB_Pop R&B _XS	4 / 4	4	67			:
GtPl	R&B-M	1264	MC_Pop R&B _XS	4 / 4	4	67			:
GtPl	R&B-M	1265	FA_Pop R&B _XS	4 / 4	1	67			:
GtPl	R&B-M	1266	FB_Pop R&B _XS	4 / 4	1	67			:
GtPl	R&B-M	1267	FC_Pop R&B _XS	4 / 4	1	67			:
GtPl	R&B-M	1268	MA_H-R&B Pop _XS	4 / 4	4	140			Acoustic Guitar
GtPl	R&B-M	1269	MB_H-R&B Pop _XS	4 / 4	4	140			:
GtPl	R&B-M	1270	MC_H-R&B Pop _XS	4 / 4	4	140			:
GtPl	R&B-M	1271	FC_H-R&B Pop _XS	4 / 4	1	140			:
GtPl	R&B-M	1272	MD_6/8 R&B	4 / 4	2	61			Clean Guitar
GtPl	R&B-M	1273	FA_6/8 R&B	4 / 4	1	61			:
GtPl	R&B-M	1274	FB_6/8 R&B	4 / 4	1	61			:
GtPl	R&B-M	1275	FC_6/8 R&B	4 / 4	2	61			:
GtPl	R&B-M	1276	MA_Smooth 1	4 / 4	2	115			Acoustic Guitar
GtPl	R&B-M	1277	MB_Smooth 1	4 / 4	2	115			:
GtPl	R&B-M	1278	MC_Smooth 1	4 / 4	2	115			:
GtPl	R&B-M	1279	MD_Smooth 1	4 / 4	2	115			:
GtPl	R&B-M	1280	IA_Smooth 1	4 / 4	1	115			:
GtPl	R&B-M	1281	FA_Smooth 1	4 / 4	1	115			:
GtPl	R&B-M	1282	FB_Smooth 1	4 / 4	1	115			:
GtPl	R&B-M	1283	FC_Smooth 1	4 / 4	2	115			:
GtPl	R&B-M	1284	MA1_Flip Hop 1	4 / 4	1	132			Clean Guitar
GtPl	R&B-M	1285	MB1_Flip Hop 1	4 / 4	2	132			:
GtPl	R&B-M	1286	MC1_Flip Hop 1	4 / 4	2	132			Mute Guitar
GtPl	R&B-M	1287	MD1_Flip Hop 1	4 / 4	2	132			:
GtPl	R&B-M	1288	FA1_Flip Hop 1	4 / 4	1	132			:
GtPl	R&B-M	1289	FC1_Flip Hop 1	4 / 4	1	132			:
GtPl	R&B-M	1290	FA2_Flip Hop 1	4 / 4	1	132			Acoustic Guitar
GtPl	R&B-M	1291	FB2_Flip Hop 1 _ES	4 / 4	1	132			:
GtPl	R&B-M	1292	FC2_Flip Hop 1	4 / 4	2	132			:
GtPl	R&B-M	1293	MA_New Gospel _ES	4 / 4	2	90			Mute Guitar
GtPl	R&B-M	1294	MB_New Gospel _ES	4 / 4	2	90			:
GtPl	R&B-M	1295	MC_New Gospel _ES	4 / 4	2	90			:
GtPl	R&B-M	1296	MD_New Gospel _ES	4 / 4	2	90			:
GtPl	R&B-M	1297	IA_New Gospel _ES	4 / 4	1	90			:
GtPl	R&B-M	1298	FA_New Gospel _ES	4 / 4	1	90			:
GtPl	R&B-M	1299	FB_New Gospel _ES	4 / 4	1	90			:
GtPl	R&B-M	1300	FC_New Gospel _ES	4 / 4	2	90			:
GtPl	R&B-C	1301	MA_Soul 2	4 / 4	1	120			Clean Guitar
GtPl	R&B-C	1302	MB_Soul 2	4 / 4	1	120			:
GtPl	R&B-C	1303	MC_Soul 2	4 / 4	1	120			:
GtPl	R&B-C	1304	MD_Soul 2	4 / 4	4	120			:
GtPl	R&B-C	1305	FC_Soul 2	4 / 4	4	120			:
GtPl	Funk	1306	MA_Funk 3	4 / 4	2	132			:
GtPl	Funk	1307	MB_Funk 3	4 / 4	1	132			:
GtPl	Funk	1308	MC_Funk 3	4 / 4	1	132			:
GtPl	Funk	1309	MD_Funk 3	4 / 4	4	132			:
GtPl	Funk	1310	IA_Funk 3	4 / 4	1	132			:
GtPl	Funk	1311	FB_Funk 3	4 / 4	1	132			:
GtPl	Funk	1312	FC_Funk 3	4 / 4	2	132			:
GtPl	Funk	1313	MA_Cool Funk _ES	4 / 4	2	96			:
GtPl	Funk	1314	MB_Cool Funk	4 / 4	1	96			:
GtPl	Funk	1315	MD_Cool Funk	4 / 4	2	96			:
GtPl	Funk	1316	IA_Cool Funk	4 / 4	2	96			:
GtPl	Funk	1317	FC_Cool Funk	4 / 4	1	96			:
GtPl	Funk	1318	MA_Jazz Funk 2	4 / 4	2	120			:
GtPl	Funk	1319	MB_Jazz Funk 2	4 / 4	2	120			:
GtPl	Funk	1320	MC_Jazz Funk 2	4 / 4	1	120			:
GtPl	Funk	1321	MD_Jazz Funk 2	4 / 4	2	120			:
GtPl	Funk	1322	IA_Jazz Funk 2	4 / 4	2	120			:

Main Category	Sub Category	ARP No.	ARP Name	Time Signature	Length	Original Tempo	Accent	Random SFX	Voice Type
GtPl	Funk	1323	FB_Jazz Funk 2	4 / 4	1	120			Clean Guitar
GtPl	Funk	1324	FC_Jazz Funk 2	4 / 4	1	120			:
GtPl	Funk	1325	MA_Funky1	4 / 4	2	120			:
GtPl	Funk	1326	MA_Funky2	4 / 4	2	120			:
GtPl	Funk	1327	MA_Funky3	4 / 4	2	120			:
GtPl	Funk	1328	MA_Funky4	4 / 4	1	120			:
GtPl	Funk	1329	MA_Funk Guitar	4 / 4	2	116			Mute Guitar
GtPl	Funk	1330	MA_CleanGuitrA1	4 / 4	2	120			Clean Guitar
GtPl	Funk	1331	MA_CleanGuitrA2	4 / 4	2	120			:
GtPl	Funk	1332	MA_CleanGuitrA3	4 / 4	2	120			:
GtPl	Funk	1333	MA_CleanGuitrA4	4 / 4	2	120			:
GtPl	Funk	1334	MA_CleanGuitrB1 _ES	4 / 4	4	127			:
GtPl	Funk	1335	MA_CleanGuitrB2 _ES	4 / 4	4	107			:
GtPl	Funk	1336	MA_CleanGuitrB3 _ES	4 / 4	4	107			:
GtPl	Funk	1337	MA_CleanGuitrB4 _ES	4 / 4	4	107			:
GtPl	Funk	1338	MA_CleanGuitrB5 _ES	4 / 4	4	107			:
GtPl	Funk	1339	MA_News1	4 / 4	2	120			:
GtPl	Funk	1340	MA_News2	4 / 4	2	120			Mute Guitar
GtPl	Funk	1341	MA_Spanky	4 / 4	2	105			Clean Guitar
GtPl	House	1342	MA1_Retro Pop _ES	4 / 4	2	126			Acoustic Guitar
GtPl	House	1343	MA2_Retro Pop _ES	4 / 4	2	126			Clean Guitar
GtPl	House	1344	MA_Disco House	4 / 4	2	128			:
GtPl	House	1345	MB_Disco House	4 / 4	2	128			:
GtPl	House	1346	MC_Disco House	4 / 4	2	128			:
GtPl	House	1347	MD_Disco House	4 / 4	2	128			:
GtPl	House	1348	IA_Disco House	4 / 4	4	128			:
GtPl	House	1349	FA_Disco House	4 / 4	1	128			:
GtPl	House	1350	FB_Disco House	4 / 4	1	128			:
GtPl	House	1351	FC_Disco House	4 / 4	4	128			:
GtPl	D&B	1352	MA_Big Beat 1 _ES	4 / 4	4	115			Od/Dist Guitar
GtPl	D&B	1353	MB_Big Beat 1 _ES	4 / 4	4	115			:
GtPl	D&B	1354	MC_Big Beat 1 _ES	4 / 4	4	115			:
GtPl	D&B	1355	FA_Big Beat 1 _ES	4 / 4	1	115			:
GtPl	D&B	1356	FB_Big Beat 1 _ES	4 / 4	1	115			:
GtPl	D&B	1357	FC_Big Beat 1 _ES	4 / 4	1	115			:
GtPl	D&B	1358	BA_Big Beat 1 _ES	4 / 4	1	115			:
GtPl	D&B	1359	MA_Big Beat 2 _ES	4 / 4	4	145			:
GtPl	D&B	1360	MB_Big Beat 2 _ES	4 / 4	8	145			:
GtPl	D&B	1361	MC_Big Beat 2 _ES	4 / 4	4	145			:
GtPl	D&B	1362	FA_Big Beat 2 _ES	4 / 4	1	145			:
GtPl	D&B	1363	FB_Big Beat 2 _ES	4 / 4	1	145			:
GtPl	D&B	1364	FC_Big Beat 2 _ES	4 / 4	1	145			:
GtPl	D&B	1365	BA_Big Beat 2 _ES	4 / 4	2	145			:
GtPl	Chill	1366	MA1_Chill Out	4 / 4	2	79			Clean Guitar
GtPl	Chill	1367	MA2_Chill Out	4 / 4	1	79			Acoustic Guitar
GtPl	Chill	1368	MB2_Chill Out	4 / 4	2	79			:
GtPl	Chill	1369	MC2_Chill Out	4 / 4	2	79			:
GtPl	Chill	1370	MD2_Chill Out	4 / 4	2	79			:
GtPl	Jazz	1371	MA_AcousticJazz _ES	4 / 4	4	204			Clean Guitar
GtPl	Jazz	1372	MB_AcousticJazz _ES	4 / 4	4	204			:
GtPl	Jazz	1373	MC_AcousticJazz _ES	4 / 4	4	204			:
GtPl	Jazz	1374	MD_AcousticJazz _ES	4 / 4	4	204			:
GtPl	Jazz	1375	IA_AcousticJazz _ES	4 / 4	4	204			:
GtPl	Jazz	1376	FA_AcousticJazz _ES	4 / 4	1	204			:
GtPl	Jazz	1377	FB_AcousticJazz _ES	4 / 4	1	204			:
GtPl	Jazz	1378	FC_AcousticJazz _ES	4 / 4	4	204			:
GtPl	Jazz	1379	MA_Modern Jazz _XS	4 / 4	16	218			:
GtPl	Jazz	1380	MB_Modern Jazz _XS	4 / 4	16	218			:
GtPl	Jazz	1381	MC_Modern Jazz _XS	4 / 4	16	218			:
GtPl	Jazz	1382	FA_Modern Jazz _XS	4 / 4	1	218			:
GtPl	Jazz	1383	FB_Modern Jazz _XS	4 / 4	1	218			:
GtPl	Jazz	1384	FC_Modern Jazz _XS	4 / 4	1	218			:
GtPl	Jazz	1385	BA_Modern Jazz _XS	4 / 4	1	218			:
GtPl	Jazz	1386	EA_Modern Jazz _XS	4 / 4	6	218			:
GtPl	Jazz	1387	EB_Modern Jazz _XS	4 / 4	7	218			:
GtPl	Jazz	1388	MA_R&R Shuffle _XS	4 / 4	4	192			:
GtPl	Jazz	1389	MB_R&R Shuffle _XS	4 / 4	4	192			:
GtPl	Jazz	1390	MC_R&R Shuffle _XS	4 / 4	4	192			:
GtPl	Jazz	1391	FA_R&R Shuffle _XS	4 / 4	1	192			:
GtPl	Jazz	1392	FB_R&R Shuffle _XS	4 / 4	1	192			:
GtPl	Jazz	1393	FC_R&R Shuffle _XS	4 / 4	1	192			:
GtPl	Jazz	1394	BA_R&R Shuffle _XS	4 / 4	1	192			:
GtPl	Jazz	1395	EA_R&R Shuffle _XS	4 / 4	5	192			:
GtPl	Jazz	1396	EB_R&R Shuffle _XS	4 / 4	5	192			:
GtPl	Jazz	1397	MA_Slow Blues 2 _XS	4 / 4	4	72			"Mid Drive (2handGtr)"
GtPl	Jazz	1398	MB_Slow Blues 2 _XS	4 / 4	4	72			:
GtPl	Jazz	1399	MC_Slow Blues 2 _XS	4 / 4	4	72			:
GtPl	Jazz	1400	FA_Slow Blues 2 _XS	4 / 4	1	72			:
GtPl	Jazz	1401	FB_Slow Blues 2 _XS	4 / 4	1	72			:
GtPl	Jazz	1402	FC_Slow Blues 2 _XS	4 / 4	1	72			:
GtPl	Jazz	1403	BA_Slow Blues 2 _XS	4 / 4	1	72			:
GtPl	Jazz	1404	MA_Slow Blues 2 _ES	4 / 4	4	72			:
GtPl	Jazz	1405	MB_Slow Blues 2 _ES	4 / 4	4	72			:

Main Category	Sub Category	ARP No.	ARP Name	Time Signature	Length	Original Tempo	Accent	Random SFX	Voice Type
GtPl	Jazz	1406	MC_Slow Blues 2 _ES	4 / 4	4	72			"Mid Drive (2handGtr)"
GtPl	Jazz	1407	FA_Slow Blues 2 _ES	4 / 4	1	72			:
GtPl	Jazz	1408	FB_Slow Blues 2 _ES	4 / 4	1	72			:
GtPl	Jazz	1409	FC_Slow Blues 2 _ES	4 / 4	1	72			:
GtPl	Jazz	1410	BA_Slow Blues 2 _ES	4 / 4	1	72			:
GtPl	Latin	1411	MA_Montuno _ES	4 / 4	2	100			Acoustic Guitar
GtPl	Latin	1412	MB_Montuno _ES	4 / 4	2	100			:
GtPl	Latin	1413	MC_Montuno/1 _ES	4 / 4	2	100			:
GtPl	Latin	1414	MC_Montuno/2 _ES	4 / 4	4	100			:
GtPl	Latin	1415	MD_Montuno/1 _ES	4 / 4	2	100			:
GtPl	Latin	1416	MD_Montuno/2 _ES	4 / 4	2	100			:
GtPl	Latin	1417	IA_Montuno _ES	4 / 4	2	100			:
GtPl	Latin	1418	FA_Montuno _ES	4 / 4	1	100			:
GtPl	Latin	1419	FC_Montuno _ES	4 / 4	1	100			:
GtPl	Latin	1420	MA_Samba	4 / 4	4	120			:
GtPl	Latin	1421	MB_Samba	4 / 4	4	120			:
GtPl	Latin	1422	MD_Samba	4 / 4	4	120			:
GtPl	Latin	1423	IA_Samba	4 / 4	2	120			:
GtPl	Latin	1424	MA_Bomba _XS	4 / 4	4	99			:
GtPl	Latin	1425	MB_Bomba _XS	4 / 4	4	99			:
GtPl	Latin	1426	MC_Bomba _XS	4 / 4	4	99			:
GtPl	Latin	1427	FA_Bomba _XS	4 / 4	1	99			:
GtPl	Latin	1428	FB_Bomba _XS	4 / 4	1	99			:
GtPl	Latin	1429	FC_Bomba _XS	4 / 4	1	99			:
GtPl	Latin	1430	BA_Bomba _XS	4 / 4	1	99			:
GtPl	Latin	1431	EA_Bomba _XS	4 / 4	3	99			:
GtPl	Latin	1432	EB_Bomba _XS	4 / 4	3	99			:
GtPl	Latin	1433	MA_Bomba _ES	4 / 4	4	99			:
GtPl	Latin	1434	MB_Bomba	4 / 4	4	99			:
GtPl	Latin	1435	MC_Bomba _ES	4 / 4	4	99			:
GtPl	Latin	1436	FA_Bomba	4 / 4	1	99			:
GtPl	Latin	1437	FB_Bomba	4 / 4	1	99			:
GtPl	Latin	1438	FC_Bomba _ES	4 / 4	1	99			:
GtPl	Latin	1439	BA_Bomba	4 / 4	1	99			:
GtPl	Latin	1440	MA_Guaguanco _XS	4 / 4	4	120			:
GtPl	Latin	1441	MB_Guaguanco _XS	4 / 4	4	120			:
GtPl	Latin	1442	MC_Guaguanco _XS	4 / 4	4	120			:
GtPl	Latin	1443	FA_Guaguanco _XS	4 / 4	1	120			:
GtPl	Latin	1444	FB_Guaguanco _XS	4 / 4	1	120			:
GtPl	Latin	1445	FC_Guaguanco _XS	4 / 4	1	120			:
GtPl	Latin	1446	BA_Guaguanco _XS	4 / 4	1	120			:
GtPl	Latin	1447	EA_Guaguanco _XS	4 / 4	3	120			:
GtPl	Latin	1448	EB_Guaguanco _XS	4 / 4	3	120			:
GtPl	Latin	1449	MC1_Latin Rock	4 / 4	2	120			Clean Guitar
GtPl	Latin	1450	FB1_Latin Rock	4 / 4	1	120			:
GtPl	Latin	1451	MB2_Latin Rock	4 / 4	1	120			Acoustic Guitar
GtPl	Latin	1452	MC2_Latin Rock	4 / 4	2	120			:
GtPl	Latin	1453	MA_LatinPhrase1	4 / 4	2	120			:
GtPl	Latin	1454	MA_LatinPhrase2	4 / 4	2	120			:
GtPl	Latin	1455	MA_LatinPhrase3	4 / 4	1	120			:
GtPl	Latin	1456	MA_SteelGuitar1 _ES	4 / 4	4	120			:
GtPl	Latin	1457	MA_SteelGuitar2 _ES	4 / 4	4	120			:
GtPl	Latin	1458	MA_SteelGuitar3 _ES	4 / 4	4	120			:
GtPl	Latin	1459	MA_SteelGuitar4 _ES	4 / 4	4	120			:
GtPl	World	1460	MA1_Reggae 1	4 / 4	1	102			Clean Guitar
GtPl	World	1461	MB1_Reggae 1	4 / 4	2	102			:
GtPl	World	1462	MD1_Reggae 1	4 / 4	2	90			:
GtPl	World	1463	IA1_Reggae 1	4 / 4	1	102			:
GtPl	World	1464	FC1_Reggae 1	4 / 4	2	96			:
GtPl	World	1465	MA2_Reggae 1	4 / 4	4	102			Mute Guitar
GtPl	World	1466	MB2_Reggae 1	4 / 4	4	102			:
GtPl	World	1467	MA_Reggae 2	4 / 4	2	92			Clean Guitar
GtPl	World	1468	MB_Reggae 2	4 / 4	1	92			:
GtPl	World	1469	IA_Reggae 2	4 / 4	2	92			:
GtPl	World	1470	MA1_Spanish Pop	4 / 4	2	120			Acoustic Guitar
GtPl	World	1471	MB1_Spanish Pop	4 / 4	2	120			:
GtPl	World	1472	MD1_Spanish Pop	4 / 4	2	120			:
GtPl	World	1473	FA1_Spanish Pop	4 / 4	1	120			:
GtPl	World	1474	FB1_Spanish Pop	4 / 4	1	120			:
GtPl	World	1475	IA2_Spanish Pop	4 / 4	4	120			:
GtPl	World	1476	FC2_Spanish Pop	4 / 4	3	120			:
GtPl	World	1477	MA3_Spanish Pop	4 / 4	2	120			:
GtPl	World	1478	MB3_Spanish Pop	4 / 4	2	120			:
GtPl	World	1479	MC3_Spanish Pop	4 / 4	2	120			:
GtPl	World	1480	MD3_Spanish Pop	4 / 4	2	120			:
GtPl	World	1481	IA3_Spanish Pop	4 / 4	4	120			:
GtPl	World	1482	FA3_Spanish Pop	4 / 4	1	120			:
GtPl	World	1483	FB3_Spanish Pop	4 / 4	1	120			:
GtPl	World	1484	MA_ModBluegrass _XS	4 / 4	4	121			Banjo
GtPl	World	1485	MB_ModBluegrass _XS	4 / 4	4	121			:
GtPl	World	1486	MC_ModBluegrass _XS	4 / 4	4	121			:
GtPl	World	1487	FA_ModBluegrass _XS	4 / 4	1	121			:
GtPl	World	1488	FB_ModBluegrass _XS	4 / 4	1	121			:

Main Category	Sub Category	ARP No.	ARP Name	Time Signature	Length	Original Tempo	Accent	Random SFX	Voice Type
GtPl	World	1489	FC_ModBluegrass _XS	4 / 4	1	121			Banjo
GtPl	World	1490	BA_ModBluegrass _XS	4 / 4	1	121			:
GtPl	World	1491	EA_ModBluegrass _XS	4 / 4	6	121			:
GtPl	World	1492	MB1_Turkish _ES	4 / 4	2	105			Kotoun
GtPl	World	1493	MD1_Turkish _ES	9 / 8	2	125			:
GtPl	World	1494	ME1_Turkish _ES	4 / 4	2	105			:
GtPl	World	1495	IA1_Turkish _ES	4 / 4	2	86			:
GtPl	World	1496	MF2_Turkish _ES	4 / 4	2	105			Kanun
GtPl	World	1497	MA3_Turkish _ES	4 / 4	2	105			Bouzuki
GtPl	World	1498	MA_Sitar _ES	4 / 4	2	140			Sitar
GtPl	World	1499	MB_Sitar _ES	4 / 4	2	140			:
GtPl	World	1500	MC_Sitar _ES	4 / 4	2	140			:
GtPl	World	1501	MD_Sitar _ES	4 / 4	2	140			:
GtPl	World	1502	ME_Sitar _ES	4 / 4	2	140			:
GtPl	World	1503	MA_Sitar Gliss _ES	4 / 4	3	120			:
GtPl	World	1504	MB_Sitar Gliss _ES	4 / 4	3	120			:
GtPl	World	1505	MA_Berimbau _ES	4 / 4	4	110			"Berimbau"
GtPl	World	1506	MB_Berimbau _ES	4 / 4	2	110			:
GtPl	World	1507	MC_Berimbau _ES	4 / 4	4	110			:
GtPl	World	1508	MD_Berimbau _ES	4 / 4	4	110			:
GtPl	World	1509	ME_Berimbau _ES	4 / 4	2	110			:
GtPl	Genrl	1510	MA_Strum1	4 / 4	1	120			Acoustic Guitar
GtPl	Genrl	1511	MA_Strum2	4 / 4	2	120			:
GtPl	Genrl	1512	MA_Strum3	4 / 4	4	120			:
GtPl	Genrl	1513	MA_Strum4	4 / 4	2	120			:
GtPl	Genrl	1514	MA_Strum5	4 / 4	2	120			:
GtPl	Genrl	1515	MA_Strum6	4 / 4	2	120			:
GtPl	Genrl	1516	MA_Strum7	4 / 4	2	120			:
GtPl	Genrl	1517	MA_Strum8	4 / 4	2	120			:
GtPl	Genrl	1518	MA_Strum9	4 / 4	2	120			:
GtPl	Genrl	1519	MA_Strum10	4 / 4	2	120			:
GtPl	Genrl	1520	MA_Guitar Arp1	4 / 4	1	120			:
GtPl	Genrl	1521	MA_Guitar Arp2	4 / 4	1	120			:
GtPl	Genrl	1522	MA_Guitar Arp3	4 / 4	1	120			:
GtPl	Genrl	1523	MA_Guitar Arp4	4 / 4	1	120			:
GtPl	Genrl	1524	MA_RolliArp	4 / 4	4	60			:
GtPl	Genrl	1525	Tremolo	4 / 4	1	100			:
GtPl	Genrl	1526	Lick1	4 / 4	4	120			Od/Dist Guitar
GtPl	Genrl	1527	Lick2	4 / 4	4	120			:
GtPl	Genrl	1528	Lick3	4 / 4	4	120			:
GtPl	Genrl	1529	Lick4	4 / 4	2	120			:
GtPl	Genrl	1530	Lick5	4 / 4	4	120			:
GtPl	Genrl	1531	Lick6	4 / 4	1	120			:
GtMG	Rock	1532	MA1_StandardRock _XS	4 / 4	4	131		●	"Mega 60s Tube Tone"
GtMG	Rock	1533	MB1_StandardRock _XS	4 / 4	4	131		●	:
GtMG	Rock	1534	MC1_StandardRock _XS	4 / 4	4	131		●	:
GtMG	Rock	1535	FA1_StandardRock _XS	4 / 4	1	131		●	:
GtMG	Rock	1536	FB1_StandardRock _XS	4 / 4	1	131		●	:
GtMG	Rock	1537	FC1_StandardRock _XS	4 / 4	1	131		●	:
GtMG	Rock	1538	BA1_StandardRock _XS	4 / 4	1	131		●	:
GtMG	Rock	1539	EA1_StandardRock _XS	4 / 4	4	131		●	:
GtMG	Rock	1540	EB1_StandardRock _XS	4 / 4	6	131		●	:
GtMG	Rock	1541	MA2_StandardRock _XS	4 / 4	4	131		●	"Mega 1coil Slap Dist"
GtMG	Rock	1542	MB2_StandardRock _XS	4 / 4	4	131		●	:
GtMG	Rock	1543	MC2_StandardRock _XS	4 / 4	4	131		●	:
GtMG	Rock	1544	FA2_StandardRock _XS	4 / 4	1	131		●	:
GtMG	Rock	1545	FB2_StandardRock _XS	4 / 4	1	131		●	:
GtMG	Rock	1546	FC2_StandardRock _XS	4 / 4	1	131		●	:
GtMG	Rock	1547	BA2_StandardRock _XS	4 / 4	1	131		●	:
GtMG	Rock	1548	EA2_StandardRock _XS	4 / 4	4	131		●	:
GtMG	Rock	1549	EB2_StandardRock _XS	4 / 4	6	131		●	:
GtMG	Rock	1550	MA1_Ovdr PowerRk _XS	4 / 4	4	120		●	"Mega Ovdr Distortion"
GtMG	Rock	1551	MB1_Ovdr PowerRk _XS	4 / 4	4	120		●	:
GtMG	Rock	1552	MC1_Ovdr PowerRk _XS	4 / 4	4	120		●	:
GtMG	Rock	1553	FA1_Ovdr PowerRk _XS	4 / 4	1	120		●	:
GtMG	Rock	1554	FB1_Ovdr PowerRk _XS	4 / 4	1	120		●	:
GtMG	Rock	1555	FC1_Ovdr PowerRk _XS	4 / 4	1	120		●	:
GtMG	Rock	1556	BA1_Ovdr PowerRk _XS	4 / 4	1	120		●	:
GtMG	Rock	1557	EA1_Ovdr PowerRk _XS	4 / 4	4	120		●	:
GtMG	Rock	1558	EB1_Ovdr PowerRk _XS	4 / 4	7	120		●	:
GtMG	Rock	1559	MA1_Ovdr PowerRk	4 / 4	4	120		●	:
GtMG	Rock	1560	MB1_Ovdr PowerRk	4 / 4	4	120		●	:
GtMG	Rock	1561	MC1_Ovdr PowerRk	4 / 4	4	120		●	:
GtMG	Rock	1562	FA1_Ovdr PowerRk	4 / 4	1	120		●	:
GtMG	Rock	1563	FB1_Ovdr PowerRk	4 / 4	1	120		●	:
GtMG	Rock	1564	FC1_Ovdr PowerRk	4 / 4	1	120		●	:
GtMG	Rock	1565	BA1_Ovdr PowerRk	4 / 4	1	120		●	:
GtMG	Rock	1566	MA2_Ovdr PowerRk _XS	4 / 4	4	120		●	"Mega Ovdr Fuzz"
GtMG	Rock	1567	MB2_Ovdr PowerRk _XS	4 / 4	4	120		●	:
GtMG	Rock	1568	MC2_Ovdr PowerRk _XS	4 / 4	4	120		●	:
GtMG	Rock	1569	FA2_Ovdr PowerRk _XS	4 / 4	1	120		●	:
GtMG	Rock	1570	FB2_Ovdr PowerRk _XS	4 / 4	1	120		●	:
GtMG	Rock	1571	FC2_Ovdr PowerRk _XS	4 / 4	1	120		●	:

Main Category	Sub Category	ARP No.	ARP Name	Time Signature	Length	Original Tempo	Accent	Random SFX	Voice Type
GtMG	Rock	1572	BA2_Ovdr PowerRk _XS	4 / 4	1	120		●	"Mega Ovdr Fuzz"
GtMG	Rock	1573	EA2_Ovdr PowerRk _XS	4 / 4	4	120		●	:
GtMG	Rock	1574	EB2_Ovdr PowerRk _XS	4 / 4	7	120		●	:
GtMG	Rock	1575	MA2_Ovdr PowerRk	4 / 4	4	120		●	:
GtMG	Rock	1576	MB2_Ovdr PowerRk	4 / 4	4	120		●	:
GtMG	Rock	1577	MC2_Ovdr PowerRk	4 / 4	4	120		●	:
GtMG	Rock	1578	FA2_Ovdr PowerRk	4 / 4	1	120		●	:
GtMG	Rock	1579	FB2_Ovdr PowerRk	4 / 4	1	120		●	:
GtMG	Rock	1580	FC2_Ovdr PowerRk	4 / 4	1	120		●	:
GtMG	Rock	1581	BA2_Ovdr PowerRk	4 / 4	1	120		●	:
GtMG	Rock	1582	MA_ContempRock _XS	4 / 4	4	126		●	"Mega 1coil Slap Dist"
GtMG	Rock	1583	MB_ContempRock _XS	4 / 4	4	126		●	:
GtMG	Rock	1584	MC_ContempRock _XS	4 / 4	4	126		●	:
GtMG	Rock	1585	FA_ContempRock _XS	4 / 4	1	126		●	:
GtMG	Rock	1586	FB_ContempRock _XS	4 / 4	1	126		●	:
GtMG	Rock	1587	FC_ContempRock _XS	4 / 4	1	126		●	:
GtMG	Rock	1588	BA_ContempRock _XS	4 / 4	1	126		●	:
GtMG	Rock	1589	EA_ContempRock _XS	4 / 4	4	126		●	:
GtMG	Rock	1590	EB_ContempRock _XS	4 / 4	4	126		●	:
GtMG	Rock	1591	MA1_Hard Rock _XS	4 / 4	4	120		●	"Mega 60s Tube Tone"
GtMG	Rock	1592	MB1_Hard Rock _XS	4 / 4	4	120		●	:
GtMG	Rock	1593	MC1_Hard Rock _XS	4 / 4	4	120		●	:
GtMG	Rock	1594	FA1_Hard Rock _XS	4 / 4	1	120		●	:
GtMG	Rock	1595	FB1_Hard Rock _XS	4 / 4	1	120		●	:
GtMG	Rock	1596	FC1_Hard Rock _XS	4 / 4	1	120		●	:
GtMG	Rock	1597	BA1_Hard Rock _XS	4 / 4	1	120		●	:
GtMG	Rock	1598	EA1_Hard Rock _XS	4 / 4	3	120		●	:
GtMG	Rock	1599	EB1_Hard Rock _XS	4 / 4	6	120		●	:
GtMG	Rock	1600	MA2_Hard Rock _XS	4 / 4	4	120		●	:
GtMG	Rock	1601	MB2_Hard Rock _XS	4 / 4	4	120		●	:
GtMG	Rock	1602	MC2_Hard Rock _XS	4 / 4	4	120		●	:
GtMG	Rock	1603	FA2_Hard Rock _XS	4 / 4	1	120		●	:
GtMG	Rock	1604	FB2_Hard Rock _XS	4 / 4	1	120		●	:
GtMG	Rock	1605	FC2_Hard Rock _XS	4 / 4	1	120		●	:
GtMG	Rock	1606	BA2_Hard Rock _XS	4 / 4	1	120		●	:
GtMG	Rock	1607	EA2_Hard Rock _XS	4 / 4	3	120		●	:
GtMG	Rock	1608	EB2_Hard Rock _XS	4 / 4	6	120		●	:
GtMG	Rock	1609	MA1_Blues Rock _XS	4 / 4	4	120		●	"Mega 60s Dist Stack"
GtMG	Rock	1610	MB1_Blues Rock _XS	4 / 4	4	120		●	:
GtMG	Rock	1611	MC1_Blues Rock _XS	4 / 4	4	120		●	:
GtMG	Rock	1612	FA1_Blues Rock _XS	4 / 4	1	120		●	:
GtMG	Rock	1613	FB1_Blues Rock _XS	4 / 4	1	120		●	:
GtMG	Rock	1614	FC1_Blues Rock _XS	4 / 4	1	120		●	:
GtMG	Rock	1615	BA1_Blues Rock _XS	4 / 4	1	120		●	:
GtMG	Rock	1616	EA1_Blues Rock _XS	4 / 4	3	120		●	:
GtMG	Rock	1617	EB1_Blues Rock _XS	4 / 4	5	120		●	:
GtMG	Rock	1618	MA2_Blues Rock _XS	4 / 4	4	120		●	"Mega 60s Tube Tone"
GtMG	Rock	1619	MB2_Blues Rock _XS	4 / 4	4	120		●	:
GtMG	Rock	1620	MC2_Blues Rock _XS	4 / 4	4	120		●	:
GtMG	Rock	1621	FA2_Blues Rock _XS	4 / 4	1	120		●	:
GtMG	Rock	1622	FB2_Blues Rock _XS	4 / 4	1	120		●	:
GtMG	Rock	1623	FC2_Blues Rock _XS	4 / 4	1	120		●	:
GtMG	Rock	1624	BA2_Blues Rock _XS	4 / 4	1	120		●	:
GtMG	Rock	1625	EA2_Blues Rock _XS	4 / 4	3	120		●	:
GtMG	Rock	1626	EB2_Blues Rock _XS	4 / 4	5	120		●	:
GtMG	Rock	1627	MA1_RockShuffle _XS	4 / 4	4	121		●	"Mega 1coil Old R&R"
GtMG	Rock	1628	MB1_RockShuffle _XS	4 / 4	4	121		●	:
GtMG	Rock	1629	MC1_RockShuffle _XS	4 / 4	4	121		●	:
GtMG	Rock	1630	FA1_RockShuffle _XS	4 / 4	1	121		●	:
GtMG	Rock	1631	FB1_RockShuffle _XS	4 / 4	1	121		●	:
GtMG	Rock	1632	FC1_RockShuffle _XS	4 / 4	1	121		●	:
GtMG	Rock	1633	BA1_RockShuffle _XS	4 / 4	1	121		●	:
GtMG	Rock	1634	EA1_RockShuffle _XS	4 / 4	6	121		●	:
GtMG	Rock	1635	MA2_RockShuffle _XS	4 / 4	4	121		●	"Mega 60s Blues Tone"
GtMG	Rock	1636	MB2_RockShuffle _XS	4 / 4	4	121		●	:
GtMG	Rock	1637	MC2_RockShuffle _XS	4 / 4	4	121		●	:
GtMG	Rock	1638	FA2_RockShuffle _XS	4 / 4	1	121		●	:
GtMG	Rock	1639	FB2_RockShuffle _XS	4 / 4	1	121		●	:
GtMG	Rock	1640	FC2_RockShuffle _XS	4 / 4	1	121		●	:
GtMG	Rock	1641	BA2_RockShuffle _XS	4 / 4	1	121		●	:
GtMG	Rock	1642	EA2_RockShuffle _XS	4 / 4	6	121		●	:
GtMG	Rock	1643	MA_Rock & Roll _XS	4 / 4	4	172		●	"Mega 60s Clean"
GtMG	Rock	1644	MB_Rock & Roll _XS	4 / 4	4	172		●	:
GtMG	Rock	1645	MC_Rock & Roll _XS	4 / 4	4	172		●	:
GtMG	Rock	1646	FA_Rock & Roll _XS	4 / 4	1	172		●	:
GtMG	Rock	1647	FB_Rock & Roll _XS	4 / 4	1	172		●	:
GtMG	Rock	1648	FC_Rock & Roll _XS	4 / 4	1	172		●	:
GtMG	Rock	1649	BA_Rock & Roll _XS	4 / 4	1	172		●	:
GtMG	Rock	1650	EA_Rock & Roll _XS	4 / 4	5	172		●	:
GtMG	Rock	1651	EB_Rock & Roll _XS	4 / 4	6	172		●	:
GtMG	PopRk	1652	MA_Guitar Pop 1 _XS	4 / 4	4	100		●	"Mega 60s ChorusCombo"
GtMG	PopRk	1653	MB_Guitar Pop 1 _XS	4 / 4	4	100		●	:
GtMG	PopRk	1654	MC_Guitar Pop 1 _XS	4 / 4	4	100		●	:

Main Category	Sub Category	ARP No.	ARP Name	Time Signature	Length	Original Tempo	Accent	Random SFX	Voice Type
GtMG	PopRk	1655	FA_Guitar Pop 1 _XS	4 / 4	1	100		●	"Mega 60s ChorusCombo"
GtMG	PopRk	1656	FB_Guitar Pop 1 _XS	4 / 4	1	100		●	:
GtMG	PopRk	1657	FC_Guitar Pop 1 _XS	4 / 4	1	100		●	:
GtMG	PopRk	1658	BA_Guitar Pop 1 _XS	4 / 4	1	100		●	:
GtMG	PopRk	1659	EA_Guitar Pop 1 _XS	4 / 4	3	100		●	:
GtMG	PopRk	1660	EB_Guitar Pop 1 _XS	4 / 4	3	100		●	:
GtMG	PopRk	1661	MA1_Acoustic Pop _XS	4 / 4	4	110		●	"Mega Steel"
GtMG	PopRk	1662	MB1_Acoustic Pop _XS	4 / 4	4	110		●	:
GtMG	PopRk	1663	MC1_Acoustic Pop _XS	4 / 4	4	110		●	:
GtMG	PopRk	1664	FA1_Acoustic Pop _XS	4 / 4	1	110		●	:
GtMG	PopRk	1665	FB1_Acoustic Pop _XS	4 / 4	1	110		●	:
GtMG	PopRk	1666	FC1_Acoustic Pop _XS	4 / 4	1	110		●	:
GtMG	PopRk	1667	MA2_Acoustic Pop _XS	4 / 4	4	110		●	"Mega 60s Clean"
GtMG	PopRk	1668	MB2_Acoustic Pop _XS	4 / 4	4	110		●	:
GtMG	PopRk	1669	MC2_Acoustic Pop _XS	4 / 4	4	110		●	:
GtMG	PopRk	1670	FA2_Acoustic Pop _XS	4 / 4	1	110		●	:
GtMG	PopRk	1671	FB2_Acoustic Pop _XS	4 / 4	1	110		●	:
GtMG	PopRk	1672	FC2_Acoustic Pop _XS	4 / 4	1	110		●	:
GtMG	PopRk	1673	MA1_Worship Slow _XS	4 / 4	4	75		●	"Mega Steel"
GtMG	PopRk	1674	MB1_Worship Slow _XS	4 / 4	4	75		●	:
GtMG	PopRk	1675	MC1_Worship Slow _XS	4 / 4	4	75		●	:
GtMG	PopRk	1676	FA1_Worship Slow _XS	4 / 4	1	75		●	:
GtMG	PopRk	1677	FB1_Worship Slow _XS	4 / 4	1	75		●	:
GtMG	PopRk	1678	FC1_Worship Slow _XS	4 / 4	1	75		●	:
GtMG	PopRk	1679	BA1_Worship Slow _XS	4 / 4	1	75		●	:
GtMG	PopRk	1680	EA1_Worship Slow _XS	4 / 4	4	75		●	:
GtMG	PopRk	1681	EB1_Worship Slow _XS	4 / 4	4	75		●	:
GtMG	PopRk	1682	MA2_Worship Slow _XS	4 / 4	4	75		●	"Mega Nylon"
GtMG	PopRk	1683	MB2_Worship Slow _XS	4 / 4	4	75		●	:
GtMG	PopRk	1684	MC2_Worship Slow _XS	4 / 4	4	75		●	:
GtMG	PopRk	1685	FA2_Worship Slow _XS	4 / 4	1	75		●	:
GtMG	PopRk	1686	FB2_Worship Slow _XS	4 / 4	1	75		●	:
GtMG	PopRk	1687	FC2_Worship Slow _XS	4 / 4	1	75		●	:
GtMG	PopRk	1688	BA2_Worship Slow _XS	4 / 4	1	75		●	:
GtMG	PopRk	1689	MA1_Worship Med _XS	4 / 4	8	140		●	"Mega Steel"
GtMG	PopRk	1690	MB1_Worship Med _XS	4 / 4	4	140		●	:
GtMG	PopRk	1691	MC1_Worship Med _XS	4 / 4	4	140		●	:
GtMG	PopRk	1692	FA1_Worship Med _XS	4 / 4	1	140		●	:
GtMG	PopRk	1693	FB1_Worship Med _XS	4 / 4	1	140		●	:
GtMG	PopRk	1694	FC1_Worship Med _XS	4 / 4	1	140		●	:
GtMG	PopRk	1695	BA1_Worship Med _XS	4 / 4	1	140		●	:
GtMG	PopRk	1696	EA1_Worship Med _XS	4 / 4	4	140		●	:
GtMG	PopRk	1697	EB1_Worship Med _XS	4 / 4	4	140		●	:
GtMG	PopRk	1698	MA2_Worship Med _XS	4 / 4	8	140		●	"Mega Nylon"
GtMG	PopRk	1699	MB2_Worship Med _XS	4 / 4	4	140		●	:
GtMG	PopRk	1700	MC2_Worship Med _XS	4 / 4	4	140		●	:
GtMG	PopRk	1701	FA2_Worship Med _XS	4 / 4	1	140		●	:
GtMG	PopRk	1702	FB2_Worship Med _XS	4 / 4	1	140		●	:
GtMG	PopRk	1703	FC2_Worship Med _XS	4 / 4	1	140		●	:
GtMG	PopRk	1704	BA2_Worship Med _XS	4 / 4	1	140		●	:
GtMG	PopRk	1705	EA2_Worship Med _XS	4 / 4	4	140		●	:
GtMG	PopRk	1706	EB2_Worship Med _XS	4 / 4	4	140		●	:
GtMG	PopRk	1707	MA_Worship Fast _XS	4 / 4	8	114		●	"Mega Steel"
GtMG	PopRk	1708	MB_Worship Fast _XS	4 / 4	4	114		●	:
GtMG	PopRk	1709	MC_Worship Fast _XS	4 / 4	4	114		●	:
GtMG	PopRk	1710	FA_Worship Fast _XS	4 / 4	1	114		●	:
GtMG	PopRk	1711	FB_Worship Fast _XS	4 / 4	1	114		●	:
GtMG	PopRk	1712	FC_Worship Fast _XS	4 / 4	1	114		●	:
GtMG	PopRk	1713	BA_Worship Fast _XS	4 / 4	1	114		●	:
GtMG	PopRk	1714	EA_Worship Fast _XS	4 / 4	4	114		●	:
GtMG	PopRk	1715	EB_Worship Fast _XS	4 / 4	2	114		●	:
GtMG	PopRk	1716	MA_New Country _XS	4 / 4	2	118		●	"Mega 60s Clean"
GtMG	PopRk	1717	MB_New Country _XS	4 / 4	4	118		●	:
GtMG	PopRk	1718	MC_New Country _XS	4 / 4	2	118		●	:
GtMG	PopRk	1719	FA_New Country _XS	4 / 4	1	118		●	:
GtMG	PopRk	1720	FB_New Country _XS	4 / 4	1	118		●	:
GtMG	PopRk	1721	FC_New Country _XS	4 / 4	1	118		●	:
GtMG	PopRk	1722	BA_New Country _XS	4 / 4	1	118		●	:
GtMG	PopRk	1723	EA_New Country _XS	4 / 4	4	118		●	:
GtMG	PopRk	1724	EB_New Country _XS	4 / 4	4	118		●	:
GtMG	PopRk	1725	MA_New Country	4 / 4	2	118		●	:
GtMG	PopRk	1726	MB_New Country	4 / 4	4	118		●	:
GtMG	PopRk	1727	MC_New Country	4 / 4	2	118		●	:
GtMG	PopRk	1728	FA_New Country	4 / 4	1	118		●	:
GtMG	PopRk	1729	FB_New Country	4 / 4	1	118		●	:
GtMG	PopRk	1730	FC_New Country	4 / 4	1	118		●	:
GtMG	PopRk	1731	BA_New Country	4 / 4	1	118		●	:
GtMG	PopRk	1732	MA1_VintageGtPop _XS	4 / 4	4	148		●	"Mega Steel"
GtMG	PopRk	1733	MB1_VintageGtPop _XS	4 / 4	4	148		●	:
GtMG	PopRk	1734	MC1_VintageGtPop _XS	4 / 4	4	148		●	:
GtMG	PopRk	1735	FA1_VintageGtPop _XS	4 / 4	1	148		●	:
GtMG	PopRk	1736	FB1_VintageGtPop _XS	4 / 4	1	148		●	:
GtMG	PopRk	1737	FC1_VintageGtPop _XS	4 / 4	1	148		●	:

Main Category	Sub Category	ARP No.	ARP Name	Time Signature	Length	Original Tempo	Accent	Random SFX	Voice Type
GtMG	PopRk	1738	BA1_VintageGtPop _XS	4 / 4	1	148		●	"Mega Steel"
GtMG	PopRk	1739	EA1_VintageGtPop _XS	4 / 4	4	148		●	:
GtMG	PopRk	1740	EB1_VintageGtPop _XS	4 / 4	4	148		●	:
GtMG	PopRk	1741	MA2_VintageGtPop _XS	4 / 4	4	148		●	"Mega 60s Clean"
GtMG	PopRk	1742	MB2_VintageGtPop _XS	4 / 4	4	148		●	:
GtMG	PopRk	1743	MC2_VintageGtPop _XS	4 / 4	4	148		●	:
GtMG	PopRk	1744	FA2_VintageGtPop _XS	4 / 4	1	148		●	:
GtMG	PopRk	1745	FB2_VintageGtPop _XS	4 / 4	1	148		●	:
GtMG	PopRk	1746	FC2_VintageGtPop _XS	4 / 4	1	148		●	:
GtMG	PopRk	1747	BA2_VintageGtPop _XS	4 / 4	1	148		●	:
GtMG	PopRk	1748	EA2_VintageGtPop _XS	4 / 4	4	148		●	:
GtMG	PopRk	1749	EB2_VintageGtPop _XS	4 / 4	4	148		●	:
GtMG	PopRk	1750	MA1_WestCoastPop _XS	4 / 4	4	100		●	"Mega Steel"
GtMG	PopRk	1751	MB1_WestCoastPop _XS	4 / 4	4	100		●	:
GtMG	PopRk	1752	MC1_WestCoastPop _XS	4 / 4	4	100		●	:
GtMG	PopRk	1753	FA1_WestCoastPop _XS	4 / 4	1	100		●	:
GtMG	PopRk	1754	FB1_WestCoastPop _XS	4 / 4	1	100		●	:
GtMG	PopRk	1755	FC1_WestCoastPop _XS	4 / 4	1	100		●	:
GtMG	PopRk	1756	BA1_WestCoastPop _XS	4 / 4	1	100		●	:
GtMG	PopRk	1757	EA1_WestCoastPop _XS	4 / 4	4	100		●	:
GtMG	PopRk	1758	EB1_WestCoastPop _XS	4 / 4	4	100		●	:
GtMG	PopRk	1759	MA2_WestCoastPop _XS	4 / 4	4	100		●	"Mega 60s Tube Tone"
GtMG	PopRk	1760	MB2_WestCoastPop _XS	4 / 4	4	100		●	:
GtMG	PopRk	1761	MC2_WestCoastPop _XS	4 / 4	4	100		●	:
GtMG	PopRk	1762	FA2_WestCoastPop _XS	4 / 4	1	100		●	:
GtMG	PopRk	1763	FB2_WestCoastPop _XS	4 / 4	1	100		●	:
GtMG	PopRk	1764	FC2_WestCoastPop _XS	4 / 4	1	100		●	:
GtMG	PopRk	1765	BA2_WestCoastPop _XS	4 / 4	1	100		●	:
GtMG	PopRk	1766	EA2_WestCoastPop _XS	4 / 4	4	100		●	:
GtMG	PopRk	1767	EB2_WestCoastPop _XS	4 / 4	4	100		●	:
GtMG	PopRk	1768	MA1_Brit Pop _XS	4 / 4	2	86		●	"Mega Steel"
GtMG	PopRk	1769	MB1_Brit Pop _XS	4 / 4	2	86		●	:
GtMG	PopRk	1770	MC1_Brit Pop _XS	4 / 4	2	86		●	:
GtMG	PopRk	1771	FA1_Brit Pop _XS	4 / 4	1	86		●	:
GtMG	PopRk	1772	FB1_Brit Pop _XS	4 / 4	1	86		●	:
GtMG	PopRk	1773	FC1_Brit Pop _XS	4 / 4	1	86		●	:
GtMG	PopRk	1774	BA1_Brit Pop _XS	4 / 4	1	86		●	:
GtMG	PopRk	1775	EA1_Brit Pop _XS	4 / 4	4	86		●	:
GtMG	PopRk	1776	EB1_Brit Pop _XS	4 / 4	4	86		●	:
GtMG	PopRk	1777	MA1_Brit Pop	4 / 4	2	86		●	:
GtMG	PopRk	1778	MB1_Brit Pop	4 / 4	2	86		●	:
GtMG	PopRk	1779	MC1_Brit Pop	4 / 4	2	86		●	:
GtMG	PopRk	1780	FA1_Brit Pop	4 / 4	1	86		●	:
GtMG	PopRk	1781	FB1_Brit Pop	4 / 4	1	86		●	:
GtMG	PopRk	1782	FC1_Brit Pop	4 / 4	1	86		●	:
GtMG	PopRk	1783	BA1_Brit Pop	4 / 4	1	86		●	:
GtMG	PopRk	1784	MA2_Brit Pop _XS	4 / 4	2	86		●	"Mega 1coil SlapClean"
GtMG	PopRk	1785	MB2_Brit Pop _XS	4 / 4	2	86		●	:
GtMG	PopRk	1786	MC2_Brit Pop _XS	4 / 4	2	86		●	:
GtMG	PopRk	1787	FA2_Brit Pop _XS	4 / 4	1	86		●	:
GtMG	PopRk	1788	FB2_Brit Pop _XS	4 / 4	1	86		●	:
GtMG	PopRk	1789	FC2_Brit Pop _XS	4 / 4	1	86		●	:
GtMG	PopRk	1790	BA2_Brit Pop _XS	4 / 4	1	86		●	:
GtMG	PopRk	1791	EA2_Brit Pop _XS	4 / 4	4	86		●	:
GtMG	PopRk	1792	EB2_Brit Pop _XS	4 / 4	4	86		●	:
GtMG	PopRk	1793	MA2_Brit Pop	4 / 4	2	86		●	:
GtMG	PopRk	1794	MB2_Brit Pop	4 / 4	2	86		●	:
GtMG	PopRk	1795	MC2_Brit Pop	4 / 4	2	86		●	:
GtMG	PopRk	1796	FA2_Brit Pop	4 / 4	1	86		●	:
GtMG	PopRk	1797	FB2_Brit Pop	4 / 4	1	86		●	:
GtMG	PopRk	1798	FC2_Brit Pop	4 / 4	1	86		●	:
GtMG	PopRk	1799	BA2_Brit Pop	4 / 4	1	86		●	:
GtMG	PopRk	1800	MA_BritPopSwing _XS	4 / 4	2	110		●	"Mega Steel"
GtMG	PopRk	1801	MB_BritPopSwing _XS	4 / 4	2	110		●	:
GtMG	PopRk	1802	MC_BritPopSwing _XS	4 / 4	2	110		●	:
GtMG	PopRk	1803	FA_BritPopSwing _XS	4 / 4	1	110		●	:
GtMG	PopRk	1804	FB_BritPopSwing _XS	4 / 4	1	110		●	:
GtMG	PopRk	1805	FC_BritPopSwing _XS	4 / 4	1	110		●	:
GtMG	PopRk	1806	BA_BritPopSwing _XS	4 / 4	1	110		●	:
GtMG	PopRk	1807	EA_BritPopSwing _XS	4 / 4	4	110		●	:
GtMG	PopRk	1808	EB_BritPopSwing _XS	4 / 4	4	110		●	:
GtMG	PopRk	1809	MA_BritPopSwing	4 / 4	2	110		●	:
GtMG	PopRk	1810	MB_BritPopSwing	4 / 4	2	110		●	:
GtMG	PopRk	1811	MC_BritPopSwing	4 / 4	2	110		●	:
GtMG	PopRk	1812	FA_BritPopSwing	4 / 4	1	110		●	:
GtMG	PopRk	1813	FB_BritPopSwing	4 / 4	1	110		●	:
GtMG	PopRk	1814	FC_BritPopSwing	4 / 4	1	110		●	:
GtMG	PopRk	1815	BA_BritPopSwing	4 / 4	1	110		●	:
GtMG	PopRk	1816	MA_Cool 8Beat _XS	4 / 4	2	100		●	"Mega 60s ChorusCombo"
GtMG	PopRk	1817	MB_Cool 8Beat _XS	4 / 4	2	100		●	:
GtMG	PopRk	1818	MC_Cool 8Beat _XS	4 / 4	2	100		●	:
GtMG	PopRk	1819	FA_Cool 8Beat _XS	4 / 4	1	100		●	:
GtMG	PopRk	1820	FB_Cool 8Beat _XS	4 / 4	1	100		●	:

Main Category	Sub Category	ARP No.	ARP Name	Time Signature	Length	Original Tempo	Accent	Random SFX	Voice Type
GtMG	PopRk	1821	FC_Cool 8Beat _XS	4 / 4	1	100		●	"Mega 60s ChorusCombo"
GtMG	PopRk	1822	BA_Cool 8Beat _XS	4 / 4	1	100		●	:
GtMG	PopRk	1823	EA_Cool 8Beat _XS	4 / 4	4	100		●	:
GtMG	PopRk	1824	EB_Cool 8Beat _XS	4 / 4	4	100		●	:
GtMG	PopRk	1825	MA1_BritRockPop _XS	4 / 4	4	123		●	"Mega 1coil Old R&R"
GtMG	PopRk	1826	MB1_BritRockPop _XS	4 / 4	4	123		●	:
GtMG	PopRk	1827	MC1_BritRockPop _XS	4 / 4	4	123		●	:
GtMG	PopRk	1828	FA1_BritRockPop _XS	4 / 4	1	123		●	:
GtMG	PopRk	1829	FB1_BritRockPop _XS	4 / 4	1	123		●	:
GtMG	PopRk	1830	FC1_BritRockPop _XS	4 / 4	1	123		●	:
GtMG	PopRk	1831	BA1_BritRockPop _XS	4 / 4	1	123		●	:
GtMG	PopRk	1832	EA1_BritRockPop _XS	4 / 4	6	123		●	:
GtMG	PopRk	1833	MA2_BritRockPop _XS	4 / 4	4	123		●	"Mega 60s Clean"
GtMG	PopRk	1834	MB2_BritRockPop _XS	4 / 4	4	123		●	:
GtMG	PopRk	1835	MC2_BritRockPop _XS	4 / 4	4	123		●	:
GtMG	PopRk	1836	FA2_BritRockPop _XS	4 / 4	1	123		●	:
GtMG	PopRk	1837	FB2_BritRockPop _XS	4 / 4	1	123		●	:
GtMG	PopRk	1838	FC2_BritRockPop _XS	4 / 4	1	123		●	:
GtMG	PopRk	1839	BA2_BritRockPop _XS	4 / 4	1	123		●	:
GtMG	PopRk	1840	EA2_BritRockPop _XS	4 / 4	6	123		●	:
GtMG	PopRk	1841	MA1_80'sPopRock _XS	4 / 4	4	111		●	"Mega 1coil Old R&R"
GtMG	PopRk	1842	MB1_80'sPopRock _XS	4 / 4	4	111		●	:
GtMG	PopRk	1843	MC1_80'sPopRock _XS	4 / 4	4	111		●	:
GtMG	PopRk	1844	FA1_80'sPopRock _XS	4 / 4	1	111		●	:
GtMG	PopRk	1845	FB1_80'sPopRock _XS	4 / 4	1	111		●	:
GtMG	PopRk	1846	FC1_80'sPopRock _XS	4 / 4	1	111		●	:
GtMG	PopRk	1847	BA1_80'sPopRock _XS	4 / 4	1	111		●	:
GtMG	PopRk	1848	EA1_80'sPopRock _XS	4 / 4	7	111		●	:
GtMG	PopRk	1849	MA2_80'sPopRock _XS	4 / 4	4	111		●	"Mega 60s Clean"
GtMG	PopRk	1850	MB2_80'sPopRock _XS	4 / 4	4	111		●	:
GtMG	PopRk	1851	MC2_80'sPopRock _XS	4 / 4	4	111		●	:
GtMG	PopRk	1852	FA2_80'sPopRock _XS	4 / 4	1	111		●	:
GtMG	PopRk	1853	FB2_80'sPopRock _XS	4 / 4	1	111		●	:
GtMG	PopRk	1854	FC2_80'sPopRock _XS	4 / 4	1	111		●	:
GtMG	PopRk	1855	BA2_80'sPopRock _XS	4 / 4	1	111		●	:
GtMG	PopRk	1856	EA2_80'sPopRock _XS	4 / 4	7	111		●	:
GtMG	PopRk	1857	MA_80'sSynthRock _XS	4 / 4	4	96		●	"Mega 1coil Old R&R"
GtMG	PopRk	1858	MB_80'sSynthRock _XS	4 / 4	4	96		●	:
GtMG	PopRk	1859	MC_80'sSynthRock _XS	4 / 4	8	96		●	:
GtMG	PopRk	1860	FA_80'sSynthRock _XS	4 / 4	1	96		●	:
GtMG	PopRk	1861	FB_80'sSynthRock _XS	4 / 4	1	96		●	:
GtMG	PopRk	1862	FC_80'sSynthRock _XS	4 / 4	1	96		●	:
GtMG	PopRk	1863	BA_80'sSynthRock _XS	4 / 4	1	96		●	:
GtMG	PopRk	1864	EA_80'sSynthRock _XS	4 / 4	3	96		●	:
GtMG	PopRk	1865	MA_60sVintagePop _XS	4 / 4	4	132		●	:
GtMG	PopRk	1866	MB_60sVintagePop _XS	4 / 4	4	132		●	:
GtMG	PopRk	1867	MC_60sVintagePop _XS	4 / 4	4	132		●	:
GtMG	PopRk	1868	FA_60sVintagePop _XS	4 / 4	1	132		●	:
GtMG	PopRk	1869	FB_60sVintagePop _XS	4 / 4	1	132		●	:
GtMG	PopRk	1870	FC_60sVintagePop _XS	4 / 4	1	132		●	:
GtMG	PopRk	1871	BA_60sVintagePop _XS	4 / 4	1	132		●	:
GtMG	PopRk	1872	EA_60sVintagePop _XS	4 / 4	2	132		●	:
GtMG	PopRk	1873	MA_60sChartSwing _XS	4 / 4	4	123		●	"Mega 12 Steel"
GtMG	PopRk	1874	MB_60sChartSwing _XS	4 / 4	4	123		●	:
GtMG	PopRk	1875	MC_60sChartSwing _XS	4 / 4	4	123		●	:
GtMG	PopRk	1876	FA_60sChartSwing _XS	4 / 4	1	123		●	:
GtMG	PopRk	1877	FB_60sChartSwing _XS	4 / 4	1	123		●	:
GtMG	PopRk	1878	FC_60sChartSwing _XS	4 / 4	1	123		●	:
GtMG	PopRk	1879	BA_60sChartSwing _XS	4 / 4	1	123		●	:
GtMG	PopRk	1880	EA_60sChartSwing _XS	4 / 4	4	123		●	:
GtMG	Balad	1881	MA1_GuitarBallad _XS	4 / 4	8	94		●	"Mega Steel"
GtMG	Balad	1882	MB1_GuitarBallad _XS	4 / 4	8	94		●	:
GtMG	Balad	1883	MC1_GuitarBallad _XS	4 / 4	8	94		●	:
GtMG	Balad	1884	FA1_GuitarBallad _XS	4 / 4	1	94		●	:
GtMG	Balad	1885	FB1_GuitarBallad _XS	4 / 4	1	94		●	:
GtMG	Balad	1886	FC1_GuitarBallad _XS	4 / 4	1	94		●	:
GtMG	Balad	1887	BA1_GuitarBallad _XS	4 / 4	1	94		●	:
GtMG	Balad	1888	EA1_GuitarBallad _XS	4 / 4	4	94		●	:
GtMG	Balad	1889	EB1_GuitarBallad _XS	4 / 4	4	94		●	:
GtMG	Balad	1890	MA1_GuitarBallad	4 / 4	8	94		●	:
GtMG	Balad	1891	MB1_GuitarBallad	4 / 4	8	94		●	:
GtMG	Balad	1892	MC1_GuitarBallad	4 / 4	8	94		●	:
GtMG	Balad	1893	FA1_GuitarBallad	4 / 4	1	94		●	:
GtMG	Balad	1894	FB1_GuitarBallad	4 / 4	1	94		●	:
GtMG	Balad	1895	FC1_GuitarBallad	4 / 4	1	94		●	:
GtMG	Balad	1896	BA1_GuitarBallad	4 / 4	1	94		●	:
GtMG	Balad	1897	MA2_GuitarBallad _XS	4 / 4	8	94		●	"Mega Nylon"
GtMG	Balad	1898	MB2_GuitarBallad _XS	4 / 4	8	94		●	:
GtMG	Balad	1899	MC2_GuitarBallad _XS	4 / 4	8	94		●	:
GtMG	Balad	1900	FA2_GuitarBallad _XS	4 / 4	1	94		●	:
GtMG	Balad	1901	FB2_GuitarBallad _XS	4 / 4	1	94		●	:
GtMG	Balad	1902	FC2_GuitarBallad _XS	4 / 4	1	94		●	:
GtMG	Balad	1903	BA2_GuitarBallad _XS	4 / 4	1	94		●	:

Main Category	Sub Category	ARP No.	ARP Name	Time Signature	Length	Original Tempo	Accent	Random SFX	Voice Type
GtMG	Balad	1904	EA2_GuitarBallad _XS	4 / 4	4	94		●	"Mega Nylon"
GtMG	Balad	1905	EB2_GuitarBallad _XS	4 / 4	4	94		●	:
GtMG	Balad	1906	MA2_GuitarBallad	4 / 4	8	94		●	:
GtMG	Balad	1907	MB2_GuitarBallad	4 / 4	8	94		●	:
GtMG	Balad	1908	MC2_GuitarBallad	4 / 4	8	94		●	:
GtMG	Balad	1909	FA2_GuitarBallad	4 / 4	1	94		●	:
GtMG	Balad	1910	FB2_GuitarBallad	4 / 4	1	94		●	:
GtMG	Balad	1911	FC2_GuitarBallad	4 / 4	1	94		●	:
GtMG	Balad	1912	BA2_GuitarBallad	4 / 4	1	94		●	:
GtMG	Balad	1913	MA_Unplugged 1 _XS	4 / 4	4	120		●	"Mega Steel"
GtMG	Balad	1914	MB_Unplugged 1 _XS	4 / 4	4	120		●	:
GtMG	Balad	1915	MC_Unplugged 1 _XS	4 / 4	4	120		●	:
GtMG	Balad	1916	FA_Unplugged 1 _XS	4 / 4	1	120		●	:
GtMG	Balad	1917	FB_Unplugged 1 _XS	4 / 4	1	120		●	:
GtMG	Balad	1918	FC_Unplugged 1 _XS	4 / 4	1	120		●	:
GtMG	Balad	1919	BA_Unplugged 1 _XS	4 / 4	1	120		●	:
GtMG	Balad	1920	MA_Unplugged 1	4 / 4	4	120		●	:
GtMG	Balad	1921	MB_Unplugged 1	4 / 4	4	120		●	:
GtMG	Balad	1922	MC_Unplugged 1	4 / 4	4	120		●	:
GtMG	Balad	1923	FA_Unplugged 1	4 / 4	1	120		●	:
GtMG	Balad	1924	FB_Unplugged 1	4 / 4	1	120		●	:
GtMG	Balad	1925	FC_Unplugged 1	4 / 4	1	120		●	:
GtMG	Balad	1926	BA_Unplugged 1	4 / 4	1	120		●	:
GtMG	Balad	1927	MA_Unplugged 2 _XS	4 / 4	8	120		●	:
GtMG	Balad	1928	MB_Unplugged 2 _XS	4 / 4	8	120		●	:
GtMG	Balad	1929	MC_Unplugged 2 _XS	4 / 4	8	120		●	:
GtMG	Balad	1930	FA_Unplugged 2 _XS	4 / 4	1	120		●	:
GtMG	Balad	1931	FB_Unplugged 2 _XS	4 / 4	1	120		●	:
GtMG	Balad	1932	FC_Unplugged 2 _XS	4 / 4	1	120		●	:
GtMG	Balad	1933	BA_Unplugged 2 _XS	4 / 4	1	120		●	:
GtMG	Balad	1934	EA_Unplugged 2 _XS	4 / 4	5	120		●	:
GtMG	Balad	1935	EB_Unplugged 2 _XS	4 / 4	4	120		●	:
GtMG	Balad	1936	MA_Unplugged 2	4 / 4	8	120		●	:
GtMG	Balad	1937	MB_Unplugged 2	4 / 4	8	120		●	:
GtMG	Balad	1938	MC_Unplugged 2	4 / 4	8	120		●	:
GtMG	Balad	1939	FA_Unplugged 2	4 / 4	1	120		●	:
GtMG	Balad	1940	FB_Unplugged 2	4 / 4	1	120		●	:
GtMG	Balad	1941	FC_Unplugged 2	4 / 4	1	120		●	:
GtMG	Balad	1942	BA_Unplugged 2	4 / 4	1	120		●	:
GtMG	Balad	1943	MA_EP Ballad _XS	4 / 4	2	60		●	"Mega 1coil SlapClean"
GtMG	Balad	1944	MB_EP Ballad _XS	4 / 4	2	60		●	:
GtMG	Balad	1945	MC_EP Ballad _XS	4 / 4	2	60		●	:
GtMG	Balad	1946	FA_EP Ballad _XS	4 / 4	1	60		●	:
GtMG	Balad	1947	FB_EP Ballad _XS	4 / 4	1	60		●	:
GtMG	Balad	1948	FC_EP Ballad _XS	4 / 4	1	60		●	:
GtMG	Balad	1949	BA_EP Ballad _XS	4 / 4	1	60		●	:
GtMG	Balad	1950	EA_EP Ballad _XS	4 / 4	4	60		●	:
GtMG	Balad	1951	EB_EP Ballad _XS	4 / 4	4	60		●	:
GtMG	HipHp	1952	MA_Dancehall _XS	4 / 4	4	103		●	"Mega 1coil Old R&R"
GtMG	HipHp	1953	MB_Dancehall _XS	4 / 4	4	103		●	:
GtMG	HipHp	1954	MD_Dancehall _XS	4 / 4	4	103		●	:
GtMG	HipHp	1955	FA_Dancehall _XS	4 / 4	1	103		●	:
GtMG	HipHp	1956	FB_Dancehall _XS	4 / 4	1	103		●	:
GtMG	HipHp	1957	FD_Dancehall _XS	4 / 4	1	103		●	:
GtMG	HipHp	1958	BA_Dancehall _XS	4 / 4	1	103		●	:
GtMG	HipHp	1959	EA_Dancehall _XS	4 / 4	3	103		●	:
GtMG	R&B-M	1960	MA_Slow & Easy _XS	4 / 4	4	72		●	"Mega 60s Clean"
GtMG	R&B-M	1961	MB_Slow & Easy _XS	4 / 4	4	72		●	:
GtMG	R&B-M	1962	MC_Slow & Easy _XS	4 / 4	4	72		●	:
GtMG	R&B-M	1963	FA_Slow & Easy _XS	4 / 4	1	72		●	:
GtMG	R&B-M	1964	FB_Slow & Easy _XS	4 / 4	1	72		●	:
GtMG	R&B-M	1965	FC_Slow & Easy _XS	4 / 4	1	72		●	:
GtMG	R&B-M	1966	BA_Slow & Easy _XS	4 / 4	1	72		●	:
GtMG	R&B-M	1967	EA_Slow & Easy _XS	4 / 4	3	72		●	:
GtMG	R&B-M	1968	EB_Slow & Easy _XS	4 / 4	4	72		●	:
GtMG	R&B-M	1969	MA_R&B _XS	4 / 4	2	83		●	"Mega 60s Tube Tone"
GtMG	R&B-M	1970	MB_R&B _XS	4 / 4	2	83		●	:
GtMG	R&B-M	1971	MC_R&B _XS	4 / 4	2	83		●	:
GtMG	R&B-M	1972	FA_R&B _XS	4 / 4	1	83		●	:
GtMG	R&B-M	1973	FB_R&B _XS	4 / 4	1	83		●	:
GtMG	R&B-M	1974	FC_R&B _XS	4 / 4	1	83		●	:
GtMG	R&B-M	1975	BA_R&B _XS	4 / 4	1	83		●	:
GtMG	R&B-M	1976	EA_R&B _XS	4 / 4	4	83		●	:
GtMG	R&B-M	1977	EB_R&B _XS	4 / 4	4	83		●	:
GtMG	R&B-M	1978	MA_New R&B 1 _XS	4 / 4	2	98		●	"Mega Steel"
GtMG	R&B-M	1979	MB_New R&B 1 _XS	4 / 4	2	98		●	:
GtMG	R&B-M	1980	MC_New R&B 1 _XS	4 / 4	2	98		●	:
GtMG	R&B-M	1981	FA_New R&B 1 _XS	4 / 4	1	98		●	:
GtMG	R&B-M	1982	FB_New R&B 1 _XS	4 / 4	1	98		●	:
GtMG	R&B-M	1983	FC_New R&B 1 _XS	4 / 4	1	98		●	:
GtMG	R&B-M	1984	BA_New R&B 1 _XS	4 / 4	1	98		●	:
GtMG	R&B-M	1985	EA_New R&B 1 _XS	4 / 4	3	98		●	:
GtMG	R&B-M	1986	EB_New R&B 1 _XS	4 / 4	4	98		●	:

Main Category	Sub Category	ARP No.	ARP Name	Time Signature	Length	Original Tempo	Accent	Random SFX	Voice Type
GtMG	R&B-M	1987	MA_R&B Ballad 1 _XS	4 / 4	4	70		●	"Mega 60s Slap Clean"
GtMG	R&B-M	1988	MB_R&B Ballad 1 _XS	4 / 4	4	70		●	:
GtMG	R&B-M	1989	MC_R&B Ballad 1 _XS	4 / 4	4	70		●	:
GtMG	R&B-M	1990	FA_R&B Ballad 1 _XS	4 / 4	1	70		●	:
GtMG	R&B-M	1991	FB_R&B Ballad 1 _XS	4 / 4	1	70		●	:
GtMG	R&B-M	1992	FC_R&B Ballad 1 _XS	4 / 4	1	70		●	:
GtMG	R&B-M	1993	BA_R&B Ballad 1 _XS	4 / 4	1	70		●	:
GtMG	R&B-C	1994	MA_StandrdDisco _XS	4 / 4	4	120		●	"Mega 60s Clean"
GtMG	R&B-C	1995	MB_StandrdDisco _XS	4 / 4	4	120		●	:
GtMG	R&B-C	1996	MC_StandrdDisco _XS	4 / 4	4	120		●	:
GtMG	R&B-C	1997	FA_StandrdDisco _XS	4 / 4	1	120		●	:
GtMG	R&B-C	1998	FB_StandrdDisco _XS	4 / 4	1	120		●	:
GtMG	R&B-C	1999	FC_StandrdDisco _XS	4 / 4	1	120		●	:
GtMG	R&B-C	2000	BA_StandrdDisco _XS	4 / 4	1	120		●	:
GtMG	R&B-C	2001	EA_StandrdDisco _XS	4 / 4	3	120		●	:
GtMG	R&B-C	2002	EB_StandrdDisco _XS	4 / 4	3	120		●	:
GtMG	R&B-C	2003	MA_Retro Disco _XS	4 / 4	4	108		●	"Mega1coilSlpPedalWah"
GtMG	R&B-C	2004	MB_Retro Disco _XS	4 / 4	4	108		●	:
GtMG	R&B-C	2005	MC_Retro Disco _XS	4 / 4	4	108		●	:
GtMG	R&B-C	2006	FA_Retro Disco _XS	4 / 4	1	108		●	:
GtMG	R&B-C	2007	FB_Retro Disco _XS	4 / 4	1	108		●	:
GtMG	R&B-C	2008	FC_Retro Disco _XS	4 / 4	1	108		●	:
GtMG	R&B-C	2009	BA_Retro Disco _XS	4 / 4	1	108		●	:
GtMG	R&B-C	2010	EA_Retro Disco _XS	4 / 4	4	108		●	:
GtMG	R&B-C	2011	EB_Retro Disco _XS	4 / 4	4	108		●	:
GtMG	R&B-C	2012	MA_70sCoolDisco _XS	4 / 4	4	114		●	"Mega 60s ChorusCombo"
GtMG	R&B-C	2013	MB_70sCoolDisco _XS	4 / 4	4	114		●	:
GtMG	R&B-C	2014	MC_70sCoolDisco _XS	4 / 4	4	114		●	:
GtMG	R&B-C	2015	FA_70sCoolDisco _XS	4 / 4	1	114		●	:
GtMG	R&B-C	2016	FB_70sCoolDisco _XS	4 / 4	1	114		●	:
GtMG	R&B-C	2017	FC_70sCoolDisco _XS	4 / 4	1	114		●	:
GtMG	R&B-C	2018	BA_70sCoolDisco _XS	4 / 4	1	114		●	:
GtMG	R&B-C	2019	EA_70sCoolDisco _XS	4 / 4	4	114		●	:
GtMG	R&B-C	2020	EB_70sCoolDisco _XS	4 / 4	3	114		●	:
GtMG	R&B-C	2021	MA_Philadelphia _XS	4 / 4	2	100		●	"Mega 60s Pedal Wah"
GtMG	R&B-C	2022	MB_Philadelphia _XS	4 / 4	2	100		●	:
GtMG	R&B-C	2023	MC_Philadelphia _XS	4 / 4	2	100		●	:
GtMG	R&B-C	2024	FA_Philadelphia _XS	4 / 4	1	100		●	:
GtMG	R&B-C	2025	FB_Philadelphia _XS	4 / 4	1	100		●	:
GtMG	R&B-C	2026	FC_Philadelphia _XS	4 / 4	1	100		●	:
GtMG	R&B-C	2027	BA_Philadelphia _XS	4 / 4	1	100		●	:
GtMG	R&B-C	2028	MA_Philadelphia	4 / 4	2	100		●	:
GtMG	R&B-C	2029	MB_Philadelphia	4 / 4	2	100		●	:
GtMG	R&B-C	2030	MC_Philadelphia	4 / 4	2	100		●	:
GtMG	R&B-C	2031	FA_Philadelphia	4 / 4	1	100		●	:
GtMG	R&B-C	2032	FB_Philadelphia	4 / 4	1	100		●	:
GtMG	R&B-C	2033	FC_Philadelphia	4 / 4	1	100		●	:
GtMG	R&B-C	2034	BA_Philadelphia	4 / 4	1	100		●	:
GtMG	R&B-C	2035	EA_Philadelphia _XS	4 / 4	4	100		●	:
GtMG	R&B-C	2036	EB_Philadelphia _XS	4 / 4	3	100		●	:
GtMG	R&B-C	2037	MA_Soul 1 _XS	4 / 4	2	116		●	"Mega 1coil Slap Dist"
GtMG	R&B-C	2038	MB_Soul 1 _XS	4 / 4	2	116		●	:
GtMG	R&B-C	2039	MC_Soul 1 _XS	4 / 4	2	116		●	:
GtMG	R&B-C	2040	FA_Soul 1 _XS	4 / 4	1	116		●	:
GtMG	R&B-C	2041	FB_Soul 1 _XS	4 / 4	1	116		●	:
GtMG	R&B-C	2042	FC_Soul 1 _XS	4 / 4	1	116		●	:
GtMG	R&B-C	2043	BA_Soul 1 _XS	4 / 4	1	116		●	:
GtMG	R&B-C	2044	EA_Soul 1 _XS	4 / 4	4	116		●	:
GtMG	R&B-C	2045	EB_Soul 1 _XS	4 / 4	3	116		●	:
GtMG	R&B-C	2046	MA_70sChartSoul _XS	4 / 4	2	108		●	"Mega 60s ChorusCombo"
GtMG	R&B-C	2047	MB_70sChartSoul _XS	4 / 4	2	108		●	:
GtMG	R&B-C	2048	MC_70sChartSoul _XS	4 / 4	2	108		●	:
GtMG	R&B-C	2049	FA_70sChartSoul _XS	4 / 4	1	108		●	:
GtMG	R&B-C	2050	FB_70sChartSoul _XS	4 / 4	1	108		●	:
GtMG	R&B-C	2051	FC_70sChartSoul _XS	4 / 4	1	108		●	:
GtMG	R&B-C	2052	BA_70sChartSoul _XS	4 / 4	1	108		●	:
GtMG	R&B-C	2053	EA_70sChartSoul _XS	4 / 4	5	108		●	:
GtMG	R&B-C	2054	EB_70sChartSoul _XS	4 / 4	3	108		●	:
GtMG	R&B-C	2055	MA_Frankly Soul _XS	4 / 4	4	120		●	"Mega 60s Clean"
GtMG	R&B-C	2056	MB_Frankly Soul _XS	4 / 4	4	120		●	:
GtMG	R&B-C	2057	MC_Frankly Soul _XS	4 / 4	4	120		●	:
GtMG	R&B-C	2058	FA_Frankly Soul _XS	4 / 4	1	120		●	:
GtMG	R&B-C	2059	FB_Frankly Soul _XS	4 / 4	1	120		●	:
GtMG	R&B-C	2060	FC_Frankly Soul _XS	4 / 4	1	120		●	:
GtMG	R&B-C	2061	BA_Frankly Soul _XS	4 / 4	1	120		●	:
GtMG	R&B-C	2062	MA_Frankly Soul	4 / 4	4	120		●	:
GtMG	R&B-C	2063	MB_Frankly Soul	4 / 4	4	120		●	:
GtMG	R&B-C	2064	MC_Frankly Soul	4 / 4	4	120		●	:
GtMG	R&B-C	2065	FA_Frankly Soul	4 / 4	1	120		●	:
GtMG	R&B-C	2066	FB_Frankly Soul	4 / 4	1	120		●	:
GtMG	R&B-C	2067	FC_Frankly Soul	4 / 4	1	120		●	:
GtMG	R&B-C	2068	BA_Frankly Soul	4 / 4	1	120		●	:
GtMG	R&B-C	2069	EA_Frankly Soul _XS	4 / 4	3	120		●	:

Main Category	Sub Category	ARP No.	ARP Name	Time Signature	Length	Original Tempo	Accent	Random SFX	Voice Type
GtMG	R&B-C	2070	EB_Frankly Soul _XS	4 / 4	4	120		●	"Mega 60s Clean"
GtMG	R&B-C	2071	MA_Soul Beat _XS	4 / 4	4	124		●	:
GtMG	R&B-C	2072	MB_Soul Beat _XS	4 / 4	4	124		●	:
GtMG	R&B-C	2073	MC_Soul Beat _XS	4 / 4	4	124		●	:
GtMG	R&B-C	2074	FA_Soul Beat _XS	4 / 4	1	124		●	:
GtMG	R&B-C	2075	FB_Soul Beat _XS	4 / 4	1	124		●	:
GtMG	R&B-C	2076	FC_Soul Beat _XS	4 / 4	1	124		●	:
GtMG	R&B-C	2077	BA_Soul Beat _XS	4 / 4	1	124		●	:
GtMG	R&B-C	2078	EA_Soul Beat _XS	4 / 4	3	123		●	:
GtMG	R&B-C	2079	EB_Soul Beat _XS	4 / 4	3	123		●	:
GtMG	R&B-C	2080	MA1_Soul Band _XS	4 / 4	4	129		●	"Mega Steel"
GtMG	R&B-C	2081	MB1_Soul Band _XS	4 / 4	4	129		●	:
GtMG	R&B-C	2082	MC1_Soul Band _XS	4 / 4	4	129		●	:
GtMG	R&B-C	2083	FA1_Soul Band _XS	4 / 4	1	129		●	:
GtMG	R&B-C	2084	FB1_Soul Band _XS	4 / 4	1	129		●	:
GtMG	R&B-C	2085	FC1_Soul Band _XS	4 / 4	1	129		●	:
GtMG	R&B-C	2086	BA1_Soul Band _XS	4 / 4	1	129		●	:
GtMG	R&B-C	2087	MA2_Soul Band _XS	4 / 4	4	129		●	"Mega 60s Tube Tone"
GtMG	R&B-C	2088	MB2_Soul Band _XS	4 / 4	4	129		●	:
GtMG	R&B-C	2089	MC2_Soul Band _XS	4 / 4	4	129		●	:
GtMG	R&B-C	2090	FA2_Soul Band _XS	4 / 4	1	129		●	:
GtMG	R&B-C	2091	FB2_Soul Band _XS	4 / 4	1	129		●	:
GtMG	R&B-C	2092	FC2_Soul Band _XS	4 / 4	1	129		●	:
GtMG	R&B-C	2093	BA2_Soul Band _XS	4 / 4	1	129		●	:
GtMG	R&B-C	2094	MA_Soul Shuffle _XS	4 / 4	4	98		●	"Mega 60s Clean"
GtMG	R&B-C	2095	MB_Soul Shuffle _XS	4 / 4	4	98		●	:
GtMG	R&B-C	2096	MC_Soul Shuffle _XS	4 / 4	4	98		●	:
GtMG	R&B-C	2097	FA_Soul Shuffle _XS	4 / 4	1	98		●	:
GtMG	R&B-C	2098	FB_Soul Shuffle _XS	4 / 4	1	98		●	:
GtMG	R&B-C	2099	FC_Soul Shuffle _XS	4 / 4	1	98		●	:
GtMG	R&B-C	2100	BA_Soul Shuffle _XS	4 / 4	1	98		●	:
GtMG	R&B-C	2101	EA_Soul Shuffle _XS	4 / 4	3	98		●	:
GtMG	R&B-C	2102	EB_Soul Shuffle _XS	4 / 4	3	98		●	:
GtMG	R&B-C	2103	MA_Soul Swing _XS	4 / 4	4	124		●	:
GtMG	R&B-C	2104	MB_Soul Swing _XS	4 / 4	4	124		●	:
GtMG	R&B-C	2105	MC_Soul Swing _XS	4 / 4	4	124		●	:
GtMG	R&B-C	2106	FA_Soul Swing _XS	4 / 4	1	124		●	:
GtMG	R&B-C	2107	FB_Soul Swing _XS	4 / 4	1	124		●	:
GtMG	R&B-C	2108	FC_Soul Swing _XS	4 / 4	1	124		●	:
GtMG	R&B-C	2109	BA_Soul Swing _XS	4 / 4	1	124		●	:
GtMG	R&B-C	2110	EA_Soul Swing _XS	4 / 4	3	123		●	:
GtMG	R&B-C	2111	EB_Soul Swing _XS	4 / 4	5	123		●	:
GtMG	R&B-C	2112	MA_GospelBrothr _XS	4 / 4	4	108		●	"Mega 60s ChorusCombo"
GtMG	R&B-C	2113	MB_GospelBrothr _XS	4 / 4	4	108		●	:
GtMG	R&B-C	2114	MC_GospelBrothr _XS	4 / 4	4	108		●	:
GtMG	R&B-C	2115	FA_GospelBrothr _XS	4 / 4	1	108		●	:
GtMG	R&B-C	2116	FB_GospelBrothr _XS	4 / 4	1	108		●	:
GtMG	R&B-C	2117	FC_GospelBrothr _XS	4 / 4	1	108		●	:
GtMG	R&B-C	2118	BA_GospelBrothr _XS	4 / 4	1	108		●	:
GtMG	R&B-C	2119	EA_GospelBrothr _XS	4 / 4	4	108		●	:
GtMG	R&B-C	2120	EB_GospelBrothr _XS	4 / 4	3	108		●	:
GtMG	Funk	2121	MA_Funk 1 _XS	4 / 4	8	104		●	"Mega 1coil SlapClean"
GtMG	Funk	2122	MB_Funk 1 _XS	4 / 4	8	104		●	:
GtMG	Funk	2123	MC_Funk 1 _XS	4 / 4	8	104		●	:
GtMG	Funk	2124	FA_Funk 1 _XS	4 / 4	1	104		●	:
GtMG	Funk	2125	FB_Funk 1 _XS	4 / 4	1	104		●	:
GtMG	Funk	2126	FC_Funk 1 _XS	4 / 4	1	104		●	:
GtMG	Funk	2127	BA_Funk 1 _XS	4 / 4	1	104		●	:
GtMG	Funk	2128	EA_Funk 1 _XS	4 / 4	9	104		●	:
GtMG	Funk	2129	EB_Funk 1 _XS	4 / 4	4	104		●	:
GtMG	Funk	2130	MA1_Funk PopRock _XS	4 / 4	4	95		●	"Mega 60s Clean"
GtMG	Funk	2131	MB1_Funk PopRock _XS	4 / 4	4	95		●	:
GtMG	Funk	2132	MC1_Funk PopRock _XS	4 / 4	4	95		●	:
GtMG	Funk	2133	FA1_Funk PopRock _XS	4 / 4	1	95		●	:
GtMG	Funk	2134	FB1_Funk PopRock _XS	4 / 4	1	95		●	:
GtMG	Funk	2135	FC1_Funk PopRock _XS	4 / 4	1	95		●	:
GtMG	Funk	2136	BA1_Funk PopRock _XS	4 / 4	1	95		●	:
GtMG	Funk	2137	EA1_Funk PopRock _XS	4 / 4	4	94		●	:
GtMG	Funk	2138	EB1_Funk PopRock _XS	4 / 4	3	94		●	:
GtMG	Funk	2139	MA1_Funk PopRock	4 / 4	4	94		●	:
GtMG	Funk	2140	MB1_Funk PopRock	4 / 4	4	94		●	:
GtMG	Funk	2141	MC1_Funk PopRock	4 / 4	4	94		●	:
GtMG	Funk	2142	FA1_Funk PopRock	4 / 4	1	94		●	:
GtMG	Funk	2143	FB1_Funk PopRock	4 / 4	1	94		●	:
GtMG	Funk	2144	FC1_Funk PopRock	4 / 4	1	94		●	:
GtMG	Funk	2145	BA1_Funk PopRock	4 / 4	1	94		●	:
GtMG	Funk	2146	MA2_Funk PopRock _XS	4 / 4	4	95		●	"Mega 1coil Slap Dist"
GtMG	Funk	2147	MB2_Funk PopRock _XS	4 / 4	4	95		●	:
GtMG	Funk	2148	MC2_Funk PopRock _XS	4 / 4	4	95		●	:
GtMG	Funk	2149	FA2_Funk PopRock _XS	4 / 4	1	95		●	:
GtMG	Funk	2150	FB2_Funk PopRock _XS	4 / 4	1	95		●	:
GtMG	Funk	2151	FC2_Funk PopRock _XS	4 / 4	1	95		●	:
GtMG	Funk	2152	BA2_Funk PopRock _XS	4 / 4	1	95		●	:

Main Category	Sub Category	ARP No.	ARP Name	Time Signature	Length	Original Tempo	Accent	Random SFX	Voice Type
GtMG	Funk	2153	MA2_Funk PopRock	4 / 4	4	94		●	"Mega 1coil Slap Dist"
GtMG	Funk	2154	MB2_Funk PopRock	4 / 4	4	94		●	:
GtMG	Funk	2155	MC2_Funk PopRock	4 / 4	4	94		●	:
GtMG	Funk	2156	FA2_Funk PopRock	4 / 4	1	94		●	:
GtMG	Funk	2157	FB2_Funk PopRock	4 / 4	1	94		●	:
GtMG	Funk	2158	FC2_Funk PopRock	4 / 4	1	94		●	:
GtMG	Funk	2159	BA2_Funk PopRock	4 / 4	1	94		●	:
GtMG	Funk	2160	MA_Jazz Funk 1 _XS	4 / 4	4	120		●	"Mega 60s Clean"
GtMG	Funk	2161	MB_Jazz Funk 1 _XS	4 / 4	4	120		●	:
GtMG	Funk	2162	MC_Jazz Funk 1 _XS	4 / 4	4	120		●	:
GtMG	Funk	2163	FA_Jazz Funk 1 _XS	4 / 4	1	120		●	:
GtMG	Funk	2164	FB_Jazz Funk 1 _XS	4 / 4	1	120		●	:
GtMG	Funk	2165	FC_Jazz Funk 1 _XS	4 / 4	1	120		●	:
GtMG	Funk	2166	BA_Jazz Funk 1 _XS	4 / 4	1	120		●	:
GtMG	Funk	2167	EA_Jazz Funk 1 _XS	4 / 4	3	120		●	:
GtMG	Funk	2168	EB_Jazz Funk 1 _XS	4 / 4	3	120		●	:
GtMG	Funk	2169	MA_Jazz Funk 1	4 / 4	4	120		●	:
GtMG	Funk	2170	MB_Jazz Funk 1	4 / 4	4	120		●	:
GtMG	Funk	2171	MC_Jazz Funk 1	4 / 4	4	120		●	:
GtMG	Funk	2172	FA_Jazz Funk 1	4 / 4	1	120		●	:
GtMG	Funk	2173	FB_Jazz Funk 1	4 / 4	1	120		●	:
GtMG	Funk	2174	FC_Jazz Funk 1	4 / 4	1	120		●	:
GtMG	Funk	2175	BA_Jazz Funk 1	4 / 4	1	120		●	:
GtMG	Funk	2176	MA_Jazz Pop _XS	4 / 4	2	102		●	"Mega 60s ChorusCombo"
GtMG	Funk	2177	MB_Jazz Pop _XS	4 / 4	2	102		●	:
GtMG	Funk	2178	MC_Jazz Pop _XS	4 / 4	2	102		●	:
GtMG	Funk	2179	FA_Jazz Pop _XS	4 / 4	1	102		●	:
GtMG	Funk	2180	FB_Jazz Pop _XS	4 / 4	1	102		●	:
GtMG	Funk	2181	FC_Jazz Pop _XS	4 / 4	1	102		●	:
GtMG	Funk	2182	BA_Jazz Pop _XS	4 / 4	1	102		●	:
GtMG	Funk	2183	MA_Jazz Pop	4 / 4	2	102		●	:
GtMG	Funk	2184	MB_Jazz Pop	4 / 4	2	102		●	:
GtMG	Funk	2185	MC_Jazz Pop	4 / 4	2	102		●	:
GtMG	Funk	2186	FA_Jazz Pop	4 / 4	1	102		●	:
GtMG	Funk	2187	FB_Jazz Pop	4 / 4	1	102		●	:
GtMG	Funk	2188	FC_Jazz Pop	4 / 4	1	102		●	:
GtMG	Funk	2189	BA_Jazz Pop	4 / 4	1	102		●	:
GtMG	Funk	2190	MA_Gospel Funk _XS	4 / 4	4	106		●	"Mega 60s Clean"
GtMG	Funk	2191	MB_Gospel Funk _XS	4 / 4	4	106		●	:
GtMG	Funk	2192	MC_Gospel Funk _XS	4 / 4	4	106		●	:
GtMG	Funk	2193	FA_Gospel Funk _XS	4 / 4	1	106		●	:
GtMG	Funk	2194	FB_Gospel Funk _XS	4 / 4	1	106		●	:
GtMG	Funk	2195	FC_Gospel Funk _XS	4 / 4	1	106		●	:
GtMG	Funk	2196	BA_Gospel Funk _XS	4 / 4	1	106		●	:
GtMG	Funk	2197	EA_Gospel Funk _XS	4 / 4	4	106		●	:
GtMG	Funk	2198	EB_Gospel Funk _XS	4 / 4	3	106		●	:
GtMG	Funk	2199	MA_Funk Disco _XS	4 / 4	2	126		●	"Mega 60s Small Blues"
GtMG	Funk	2200	MB_Funk Disco _XS	4 / 4	2	126		●	:
GtMG	Funk	2201	MC_Funk Disco _XS	4 / 4	2	126		●	:
GtMG	Funk	2202	FA_Funk Disco _XS	4 / 4	1	126		●	:
GtMG	Funk	2203	FB_Funk Disco _XS	4 / 4	1	126		●	:
GtMG	Funk	2204	FC_Funk Disco _XS	4 / 4	1	126		●	:
GtMG	Funk	2205	BA_Funk Disco _XS	4 / 4	1	126		●	:
GtMG	Funk	2206	EA_Funk Disco _XS	4 / 4	4	126		●	:
GtMG	Funk	2207	EB_Funk Disco _XS	4 / 4	3	126		●	:
GtMG	Funk	2208	MA_70sDiscoFunk _XS	4 / 4	4	112		●	"Mega 1coil Slap Dist"
GtMG	Funk	2209	MB_70sDiscoFunk _XS	4 / 4	4	112		●	:
GtMG	Funk	2210	MC_70sDiscoFunk _XS	4 / 4	4	112		●	:
GtMG	Funk	2211	FA_70sDiscoFunk _XS	4 / 4	1	112		●	:
GtMG	Funk	2212	FB_70sDiscoFunk _XS	4 / 4	1	112		●	:
GtMG	Funk	2213	FC_70sDiscoFunk _XS	4 / 4	1	112		●	:
GtMG	Funk	2214	BA_70sDiscoFunk _XS	4 / 4	1	112		●	:
GtMG	Funk	2215	EA_70sDiscoFunk _XS	4 / 4	4	112		●	:
GtMG	Funk	2216	EB_70sDiscoFunk _XS	4 / 4	3	112		●	:
GtMG	House	2217	MA_Disco House _XS	4 / 4	4	126		●	"Mega 60s ChorusCombo"
GtMG	House	2218	MB_Disco House _XS	4 / 4	4	126		●	:
GtMG	House	2219	MC_Disco House _XS	4 / 4	4	126		●	:
GtMG	House	2220	FA_Disco House _XS	4 / 4	1	126		●	:
GtMG	House	2221	FB_Disco House _XS	4 / 4	1	126		●	:
GtMG	House	2222	FC_Disco House _XS	4 / 4	1	126		●	:
GtMG	House	2223	BA_Disco House _XS	4 / 4	1	126		●	:
GtMG	Jazz	2224	MA_JazzGtrClub _XS	4 / 4	8	142		●	"Mega Jazz Guitar"
GtMG	Jazz	2225	MB_JazzGtrClub _XS	4 / 4	8	142		●	:
GtMG	Jazz	2226	MC_JazzGtrClub _XS	4 / 4	8	142		●	:
GtMG	Jazz	2227	FA_JazzGtrClub _XS	4 / 4	1	142		●	:
GtMG	Jazz	2228	FB_JazzGtrClub _XS	4 / 4	1	142		●	:
GtMG	Jazz	2229	FC_JazzGtrClub _XS	4 / 4	1	142		●	:
GtMG	Jazz	2230	BA_JazzGtrClub _XS	4 / 4	1	142		●	:
GtMG	Jazz	2231	EA_JazzGtrClub _XS	4 / 4	6	142		●	:
GtMG	Jazz	2232	MA_JazzWaltzMed _XS	3 / 4	8	180		●	:
GtMG	Jazz	2233	MB_JazzWaltzMed _XS	3 / 4	8	180		●	:
GtMG	Jazz	2234	MC_JazzWaltzMed _XS	3 / 4	8	180		●	:
GtMG	Jazz	2235	FA_JazzWaltzMed _XS	3 / 4	1	180		●	:

Main Category	Sub Category	ARP No.	ARP Name	Time Signature	Length	Original Tempo	Accent	Random SFX	Voice Type
GtMG	Jazz	2236	FB_JazzWaltzMed _XS	3 / 4	1	180		●	"Mega Jazz Guitar"
GtMG	Jazz	2237	FC_JazzWaltzMed _XS	3 / 4	1	180		●	:
GtMG	Jazz	2238	BA_JazzWaltzMed _XS	3 / 4	1	180		●	:
GtMG	Jazz	2239	EA_JazzWaltzMed _XS	3 / 4	7	180		●	:
GtMG	Jazz	2240	MA_ShuffleBlues _XS	4 / 4	4	115		●	"Mega 60s Tube Tone"
GtMG	Jazz	2241	MB_ShuffleBlues _XS	4 / 4	4	115		●	:
GtMG	Jazz	2242	MC_ShuffleBlues _XS	4 / 4	4	115		●	:
GtMG	Jazz	2243	FA_ShuffleBlues _XS	4 / 4	1	115		●	:
GtMG	Jazz	2244	FB_ShuffleBlues _XS	4 / 4	1	115		●	:
GtMG	Jazz	2245	FC_ShuffleBlues _XS	4 / 4	1	115		●	:
GtMG	Jazz	2246	BA_ShuffleBlues _XS	4 / 4	1	115		●	:
GtMG	Jazz	2247	EA_ShuffleBlues _XS	4 / 4	5	115		●	:
GtMG	Jazz	2248	EB_ShuffleBlues _XS	4 / 4	6	115		●	:
GtMG	Jazz	2249	MA_Slow Blues 1 _XS	4 / 4	2	49		●	:
GtMG	Jazz	2250	MB_Slow Blues 1 _XS	4 / 4	2	49		●	:
GtMG	Jazz	2251	MC_Slow Blues 1 _XS	4 / 4	2	49		●	:
GtMG	Jazz	2252	FA_Slow Blues 1 _XS	4 / 4	1	49		●	:
GtMG	Jazz	2253	FB_Slow Blues 1 _XS	4 / 4	1	49		●	:
GtMG	Jazz	2254	FC_Slow Blues 1 _XS	4 / 4	1	49		●	:
GtMG	Jazz	2255	BA_Slow Blues 1 _XS	4 / 4	1	49		●	:
GtMG	Jazz	2256	EA_Slow Blues 1 _XS	4 / 4	3	49		●	:
GtMG	Jazz	2257	EB_Slow Blues 1 _XS	4 / 4	3	49		●	:
GtMG	Jazz	2258	MA_Piano Boogie _XS	4 / 4	8	160		●	"Mega 60s ChorusCombo"
GtMG	Jazz	2259	MB_Piano Boogie _XS	4 / 4	4	160		●	:
GtMG	Jazz	2260	MC_Piano Boogie _XS	4 / 4	4	160		●	:
GtMG	Jazz	2261	FA_Piano Boogie _XS	4 / 4	1	160		●	:
GtMG	Jazz	2262	FB_Piano Boogie _XS	4 / 4	1	160		●	:
GtMG	Jazz	2263	FC_Piano Boogie _XS	4 / 4	1	160		●	:
GtMG	Jazz	2264	BA_Piano Boogie _XS	4 / 4	1	160		●	:
GtMG	Jazz	2265	EA_Piano Boogie _XS	4 / 4	5	160		●	:
GtMG	Jazz	2266	EB_Piano Boogie _XS	4 / 4	5	160		●	:
GtMG	Latin	2267	MA_Brazil Samba _XS	4 / 4	4	96		●	"Mega Nylon"
GtMG	Latin	2268	MB_Brazil Samba _XS	4 / 4	4	96		●	:
GtMG	Latin	2269	MC_Brazil Samba _XS	4 / 4	4	96		●	:
GtMG	Latin	2270	FA_Brazil Samba _XS	4 / 4	1	96		●	:
GtMG	Latin	2271	FB_Brazil Samba _XS	4 / 4	1	96		●	:
GtMG	Latin	2272	FC_Brazil Samba _XS	4 / 4	1	96		●	:
GtMG	Latin	2273	BA_Brazil Samba _XS	4 / 4	1	96		●	:
GtMG	Latin	2274	EA_Brazil Samba _XS	4 / 4	4	96		●	:
GtMG	Latin	2275	EB_Brazil Samba _XS	4 / 4	4	96		●	:
GtMG	Latin	2276	MA_Bossa _XS	4 / 4	4	124		●	:
GtMG	Latin	2277	MB_Bossa _XS	4 / 4	4	124		●	:
GtMG	Latin	2278	MC_Bossa _XS	4 / 4	4	124		●	:
GtMG	Latin	2279	FA_Bossa _XS	4 / 4	1	124		●	:
GtMG	Latin	2280	FB_Bossa _XS	4 / 4	1	124		●	:
GtMG	Latin	2281	FC_Bossa _XS	4 / 4	1	124		●	:
GtMG	Latin	2282	BA_Bossa _XS	4 / 4	1	124		●	:
GtMG	Latin	2283	EA_Bossa _XS	4 / 4	4	123		●	:
GtMG	Latin	2284	EB_Bossa _XS	4 / 4	4	123		●	:
GtMG	Latin	2285	MA_Bossa	4 / 4	4	123		●	:
GtMG	Latin	2286	MB_Bossa	4 / 4	4	123		●	:
GtMG	Latin	2287	MC_Bossa	4 / 4	4	123		●	:
GtMG	Latin	2288	FA_Bossa	4 / 4	1	123		●	:
GtMG	Latin	2289	FB_Bossa	4 / 4	1	123		●	:
GtMG	Latin	2290	FC_Bossa	4 / 4	1	123		●	:
GtMG	Latin	2291	BA_Bossa	4 / 4	1	123		●	:
GtMG	Latin	2292	MA_Merengue _XS	4 / 4	4	130		●	"Mega Steel"
GtMG	Latin	2293	MB_Merengue _XS	4 / 4	4	130		●	:
GtMG	Latin	2294	MC_Merengue _XS	4 / 4	4	130		●	:
GtMG	Latin	2295	FA_Merengue _XS	4 / 4	1	130		●	:
GtMG	Latin	2296	FB_Merengue _XS	4 / 4	1	130		●	:
GtMG	Latin	2297	FC_Merengue _XS	4 / 4	1	130		●	:
GtMG	Latin	2298	BA_Merengue _XS	4 / 4	1	130		●	:
GtMG	Latin	2299	EA_Merengue _XS	4 / 4	3	130		●	:
GtMG	Latin	2300	EB_Merengue _XS	4 / 4	3	130		●	:
GtMG	Latin	2301	MA_Merengue	4 / 4	4	130		●	:
GtMG	Latin	2302	MB_Merengue	4 / 4	4	130		●	:
GtMG	Latin	2303	MC_Merengue	4 / 4	4	130		●	:
GtMG	Latin	2304	FA_Merengue	4 / 4	1	130		●	:
GtMG	Latin	2305	FB_Merengue	4 / 4	1	130		●	:
GtMG	Latin	2306	FC_Merengue	4 / 4	1	130		●	:
GtMG	Latin	2307	BA_Merengue	4 / 4	1	130		●	:
GtMG	World	2308	MA1_ReggaeShffle _XS	4 / 4	4	90		●	"Mega 60s Clean"
GtMG	World	2309	MB1_ReggaeShffle _XS	4 / 4	4	90		●	:
GtMG	World	2310	MC1_ReggaeShffle _XS	4 / 4	4	90		●	:
GtMG	World	2311	FA1_ReggaeShffle _XS	4 / 4	1	90		●	:
GtMG	World	2312	FB1_ReggaeShffle _XS	4 / 4	1	90		●	:
GtMG	World	2313	FC1_ReggaeShffle _XS	4 / 4	1	90		●	:
GtMG	World	2314	BA1_ReggaeShffle _XS	4 / 4	1	90		●	:
GtMG	World	2315	EA1_ReggaeShffle _XS	4 / 4	3	90		●	:
GtMG	World	2316	EB1_ReggaeShffle _XS	4 / 4	4	90		●	:
GtMG	World	2317	MA2_ReggaeShffle _XS	4 / 4	4	90		●	"Mega 1coil SlapClean"
GtMG	World	2318	MB2_ReggaeShffle _XS	4 / 4	4	90		●	:

Main Category	Sub Category	ARP No.	ARP Name	Time Signature	Length	Original Tempo	Accent	Random SFX	Voice Type
GtMG	World	2319	MC2_ReggaeShffle _XS	4 / 4	4	90		●	"Mega 1coil SlapClean"
GtMG	World	2320	FA2_ReggaeShffle _XS	4 / 4	1	90		●	:
GtMG	World	2321	FB2_ReggaeShffle _XS	4 / 4	1	90		●	:
GtMG	World	2322	FC2_ReggaeShffle _XS	4 / 4	1	90		●	:
GtMG	World	2323	BA2_ReggaeShffle _XS	4 / 4	1	90		●	:
GtMG	World	2324	EA2_ReggaeShffle _XS	4 / 4	3	90		●	:
GtMG	World	2325	EB2_ReggaeShffle _XS	4 / 4	4	90		●	:
GtMG	World	2326	MA_Jumbo Reggae _XS	4 / 4	4	100		●	"Mega 60s Clean"
GtMG	World	2327	MB_Jumbo Reggae _XS	4 / 4	4	100		●	:
GtMG	World	2328	MC_Jumbo Reggae _XS	4 / 4	4	100		●	:
GtMG	World	2329	FA_Jumbo Reggae _XS	4 / 4	1	100		●	:
GtMG	World	2330	FB_Jumbo Reggae _XS	4 / 4	1	100		●	:
GtMG	World	2331	FC_Jumbo Reggae _XS	4 / 4	1	100		●	:
GtMG	World	2332	BA_Jumbo Reggae _XS	4 / 4	1	100		●	:
GtMG	World	2333	EA_Jumbo Reggae _XS	4 / 4	3	100		●	:
GtMG	World	2334	EB_Jumbo Reggae _XS	4 / 4	3	100		●	:
GtMG	World	2335	MA_RumbaFlamenc _XS	4 / 4	4	106		●	"Mega Nylon"
GtMG	World	2336	MB_RumbaFlamenc _XS	4 / 4	4	106		●	:
GtMG	World	2337	MC_RumbaFlamenc _XS	4 / 4	4	106		●	:
GtMG	World	2338	FA_RumbaFlamenc _XS	4 / 4	1	106		●	:
GtMG	World	2339	FB_RumbaFlamenc _XS	4 / 4	1	106		●	:
GtMG	World	2340	FC_RumbaFlamenc _XS	4 / 4	1	106		●	:
GtMG	World	2341	BA_RumbaFlamenc _XS	4 / 4	1	106		●	:
GtMG	World	2342	EA_RumbaFlamenc _XS	4 / 4	3	106		●	:
GtMG	World	2343	EB_RumbaFlamenc _XS	4 / 4	3	106		●	:
GtMG	World	2344	MA_ModBluegrass _XS	4 / 4	4	121		●	"Mega 1coil Old R&R"
GtMG	World	2345	MB_ModBluegrass _XS	4 / 4	4	121		●	:
GtMG	World	2346	MC_ModBluegrass _XS	4 / 4	4	121		●	:
GtMG	World	2347	FA_ModBluegrass _XS	4 / 4	1	121		●	:
GtMG	World	2348	FB_ModBluegrass _XS	4 / 4	1	121		●	:
GtMG	World	2349	FC_ModBluegrass _XS	4 / 4	1	121		●	:
GtMG	World	2350	BA_ModBluegrass _XS	4 / 4	1	121		●	:
GtMG	World	2351	EA_ModBluegrass _XS	4 / 4	6	121		●	:
GtMG	World	2352	MA_Irish Hymn _XS	3 / 4	4	70		●	"Mega Steel"
GtMG	World	2353	MB_Irish Hymn _XS	3 / 4	4	70		●	:
GtMG	World	2354	MC_Irish Hymn _XS	3 / 4	4	70		●	:
GtMG	World	2355	FA_Irish Hymn _XS	3 / 4	1	70		●	:
GtMG	World	2356	FB_Irish Hymn _XS	3 / 4	1	70		●	:
GtMG	World	2357	FC_Irish Hymn _XS	3 / 4	1	70		●	:
GtMG	World	2358	BA_Irish Hymn _XS	3 / 4	1	70		●	:
GtMG	World	2359	EA_Irish Hymn _XS	3 / 4	5	70		●	:
GtMG	World	2360	EB_Irish Hymn _XS	3 / 4	5	70		●	:
GtMG	World	2361	MA_TurkishEuro1 _XS	4 / 4	4	112		●	:
GtMG	World	2362	MB_TurkishEuro1 _XS	4 / 4	4	112		●	:
GtMG	World	2363	MC_TurkishEuro1 _XS	4 / 4	4	112		●	:
GtMG	World	2364	FA_TurkishEuro1 _XS	4 / 4	1	112		●	:
GtMG	World	2365	FB_TurkishEuro1 _XS	4 / 4	1	112		●	:
GtMG	World	2366	FC_TurkishEuro1 _XS	4 / 4	1	112		●	:
GtMG	World	2367	BA_TurkishEuro1 _XS	4 / 4	1	112		●	:
GtMG	World	2368	EA_TurkishEuro1 _XS	4 / 4	3	112		●	:
Bass	Rock	2369	MA_AlternaRock1 _ES	4 / 4	4	97			Finger Bass
Bass	Rock	2370	MB_AlternaRock1 _ES	4 / 4	4	97			:
Bass	Rock	2371	MC_AlternaRock1 _ES	4 / 4	4	97			:
Bass	Rock	2372	FA_AlternaRock1 _ES	4 / 4	1	97			:
Bass	Rock	2373	FB_AlternaRock1 _ES	4 / 4	1	97			:
Bass	Rock	2374	FC_AlternaRock1 _ES	4 / 4	1	97			:
Bass	Rock	2375	BA_AlternaRock1 _ES	4 / 4	1	97			:
Bass	Rock	2376	MA_AlternaRock2 _ES	4 / 4	4	100			:
Bass	Rock	2377	MB_AlternaRock2 _ES	4 / 4	4	100			:
Bass	Rock	2378	MC_AlternaRock2 _ES	4 / 4	4	100			:
Bass	Rock	2379	FA_AlternaRock2 _ES	4 / 4	1	100			:
Bass	Rock	2380	FB_AlternaRock2 _ES	4 / 4	1	100			:
Bass	Rock	2381	FC_AlternaRock2 _ES	4 / 4	1	100			:
Bass	Rock	2382	BA_AlternaRock2 _ES	4 / 4	1	100			:
Bass	Rock	2383	MA_Xover Rock _ES	4 / 4	1	100			:
Bass	Rock	2384	MB_Xover Rock _ES	4 / 4	1	100			:
Bass	Rock	2385	MC_Xover Rock _ES	4 / 4	2	100			:
Bass	Rock	2386	MD_Xover Rock _ES	4 / 4	2	100			:
Bass	Rock	2387	IA_Xover Rock _ES	4 / 4	2	100			:
Bass	Rock	2388	FB_Xover Rock _ES	4 / 4	1	100			:
Bass	Rock	2389	FC_Xover Rock _ES	4 / 4	2	100			:
Bass	Rock	2390	MA_8Beat Rock _XS	4 / 4	4	75			:
Bass	Rock	2391	MB_8Beat Rock _XS	4 / 4	4	75			:
Bass	Rock	2392	MC_8Beat Rock _XS	4 / 4	4	75			:
Bass	Rock	2393	FA_8Beat Rock _XS	4 / 4	1	75			:
Bass	Rock	2394	FB_8Beat Rock _XS	4 / 4	1	75			:
Bass	Rock	2395	FC_8Beat Rock _XS	4 / 4	1	75			:
Bass	Rock	2396	BA_8Beat Rock _XS	4 / 4	1	75			:
Bass	Rock	2397	MA_8Beat Rock _ES	4 / 4	4	75			:
Bass	Rock	2398	MB_8Beat Rock _ES	4 / 4	4	75			:
Bass	Rock	2399	MC_8Beat Rock _ES	4 / 4	4	75			:
Bass	Rock	2400	FA_8Beat Rock _ES	4 / 4	1	75			:
Bass	Rock	2401	FB_8Beat Rock _ES	4 / 4	1	75			:

Main Category	Sub Category	ARP No.	ARP Name	Time Signature	Length	Original Tempo	Accent	Random SFX	Voice Type
Bass	Rock	2402	FC_8Beat Rock _ES	4 / 4	1	75			Finger Bass
Bass	Rock	2403	BA_8Beat Rock _ES	4 / 4	1	75			:
Bass	Rock	2404	MA_ProgresRock1 _XS	4 / 4	4	110			Synth Bass
Bass	Rock	2405	MB_ProgresRock1 _XS	4 / 4	3	110			:
Bass	Rock	2406	MC_ProgresRock1 _XS	4 / 4	4	110			:
Bass	Rock	2407	FA_ProgresRock1 _XS	4 / 4	1	110			:
Bass	Rock	2408	FB_ProgresRock1 _XS	4 / 4	1	110			:
Bass	Rock	2409	FC_ProgresRock1 _XS	4 / 4	1	110			:
Bass	Rock	2410	BA_ProgresRock1 _XS	4 / 4	1	110			:
Bass	Rock	2411	MA_ProgresRock1 _ES	4 / 4	4	110			:
Bass	Rock	2412	MB_ProgresRock1 _ES	4 / 4	3	110			:
Bass	Rock	2413	MC_ProgresRock1 _ES	4 / 4	4	110			:
Bass	Rock	2414	FA_ProgresRock1 _ES	4 / 4	1	110			:
Bass	Rock	2415	FB_ProgresRock1 _ES	4 / 4	1	110			:
Bass	Rock	2416	FC_ProgresRock1 _ES	4 / 4	1	110			:
Bass	Rock	2417	BA_ProgresRock1 _ES	4 / 4	1	110			:
Bass	Rock	2418	MA_ProgresRock2 _XS	4 / 4	4	120			Finger Bass
Bass	Rock	2419	MB_ProgresRock2 _XS	4 / 4	4	120			:
Bass	Rock	2420	MC_ProgresRock2 _XS	4 / 4	4	120			:
Bass	Rock	2421	FA_ProgresRock2 _XS	4 / 4	1	120			:
Bass	Rock	2422	FB_ProgresRock2 _XS	4 / 4	1	120			:
Bass	Rock	2423	FC_ProgresRock2 _XS	4 / 4	1	120			:
Bass	Rock	2424	BA_ProgresRock2 _XS	4 / 4	1	120			:
Bass	Rock	2425	MA_ProgresRock2 _ES	4 / 4	4	120			:
Bass	Rock	2426	MB_ProgresRock2 _ES	4 / 4	4	120			:
Bass	Rock	2427	MC_ProgresRock2 _ES	4 / 4	4	120			:
Bass	Rock	2428	FA_ProgresRock2 _ES	4 / 4	1	120			:
Bass	Rock	2429	FB_ProgresRock2 _ES	4 / 4	1	120			:
Bass	Rock	2430	FC_ProgresRock2 _ES	4 / 4	1	120			:
Bass	Rock	2431	BA_ProgresRock2 _ES	4 / 4	1	120			:
Bass	Rock	2432	MA_Pick Bass1 _ES	4 / 4	4	120			Pick Bass
Bass	Rock	2433	MA_Pick Bass2 _ES	4 / 4	4	120			:
Bass	Rock	2434	MA_Pick Bass3 _ES	4 / 4	4	120			:
Bass	Rock	2435	MA_Pick Bass4 _ES	4 / 4	4	120			:
Bass	Rock	2436	MA_Pick Bass5 _ES	4 / 4	4	120			:
Bass	PopRk	2437	MA_Guitar Pop 2 _ES	4 / 4	2	90			Finger Bass
Bass	PopRk	2438	MB_Guitar Pop 2 _ES	4 / 4	1	90			:
Bass	PopRk	2439	MC_Guitar Pop 2 _ES	4 / 4	2	90			:
Bass	PopRk	2440	MD_Guitar Pop 2 _ES	4 / 4	2	90			:
Bass	PopRk	2441	FB_Guitar Pop 2 _ES	4 / 4	1	90			:
Bass	PopRk	2442	FC_Guitar Pop 2 _ES	4 / 4	2	90			:
Bass	PopRk	2443	MA_FingerPickin _ES	4 / 4	1	120			:
Bass	PopRk	2444	MB_FingerPickin _ES	4 / 4	2	120			:
Bass	PopRk	2445	MC_FingerPickin _ES	4 / 4	1	120			:
Bass	PopRk	2446	MD_FingerPickin _ES	4 / 4	1	120			:
Bass	PopRk	2447	FA_FingerPickin _ES	4 / 4	1	120			:
Bass	PopRk	2448	FB_FingerPickin _ES	4 / 4	1	120			:
Bass	PopRk	2449	FC_FingerPickin _ES	4 / 4	1	120			:
Bass	PopRk	2450	MB_Folk Rock _ES	4 / 4	1	120			:
Bass	PopRk	2451	MC_Folk Rock _ES	4 / 4	1	120			:
Bass	PopRk	2452	MD_Folk Rock _ES	4 / 4	1	120			:
Bass	PopRk	2453	FA_Folk Rock _ES	4 / 4	1	120			:
Bass	PopRk	2454	FC_Folk Rock _ES	4 / 4	1	120			:
Bass	PopRk	2455	MB_70s Rock _ES	4 / 4	4	130			:
Bass	PopRk	2456	MC_70s Rock _ES	4 / 4	2	130			:
Bass	PopRk	2457	MD_70s Rock _ES	4 / 4	4	130			:
Bass	PopRk	2458	FA_70s Rock _ES	4 / 4	1	130			:
Bass	PopRk	2459	MA_8Beat Basic _XS	4 / 4	4	120			:
Bass	PopRk	2460	MB_8Beat Basic _XS	4 / 4	4	120			:
Bass	PopRk	2461	MC_8Beat Basic _XS	4 / 4	4	120			:
Bass	PopRk	2462	FA_8Beat Basic _XS	4 / 4	1	120			:
Bass	PopRk	2463	FB_8Beat Basic _XS	4 / 4	1	120			:
Bass	PopRk	2464	FC_8Beat Basic _XS	4 / 4	1	120			:
Bass	PopRk	2465	BA_8Beat Basic _XS	4 / 4	1	120			:
Bass	PopRk	2466	MA_8Beat Basic _ES	4 / 4	4	120			:
Bass	PopRk	2467	MB_8Beat Basic _ES	4 / 4	4	120			:
Bass	PopRk	2468	MC_8Beat Basic _ES	4 / 4	4	120			:
Bass	PopRk	2469	FA_8Beat Basic _ES	4 / 4	1	120			:
Bass	PopRk	2470	FB_8Beat Basic _ES	4 / 4	1	120			:
Bass	PopRk	2471	FC_8Beat Basic _ES	4 / 4	1	120			:
Bass	PopRk	2472	BA_8Beat Basic _ES	4 / 4	1	120			:
Bass	PopRk	2473	MA_8Beat Soft _XS	4 / 4	4	100			:
Bass	PopRk	2474	MB_8Beat Soft _XS	4 / 4	4	100			:
Bass	PopRk	2475	MC_8Beat Soft _XS	4 / 4	4	100			:
Bass	PopRk	2476	FA_8Beat Soft _XS	4 / 4	1	100			:
Bass	PopRk	2477	FB_8Beat Soft _XS	4 / 4	1	100			:
Bass	PopRk	2478	FC_8Beat Soft _XS	4 / 4	1	100			:
Bass	PopRk	2479	BA_8Beat Soft _XS	4 / 4	1	100			:
Bass	PopRk	2480	MA_8Beat Soft _ES	4 / 4	4	100			:
Bass	PopRk	2481	MB_8Beat Soft _ES	4 / 4	4	100			:
Bass	PopRk	2482	MC_8Beat Soft _ES	4 / 4	4	100			:
Bass	PopRk	2483	FA_8Beat Soft _ES	4 / 4	1	100			:
Bass	PopRk	2484	FB_8Beat Soft _ES	4 / 4	1	100			:

Main Category	Sub Category	ARP No.	ARP Name	Time Signature	Length	Original Tempo	Accent	Random SFX	Voice Type
Bass	PopRk	2485	FC_8Beat Soft _ES	4 / 4	1	100			Finger Bass
Bass	PopRk	2486	BA_8Beat Soft _ES	4 / 4	1	100			:
Bass	PopRk	2487	MA_Soft Rock _ES	4 / 4	1	120			:
Bass	PopRk	2488	MB_Soft Rock _ES	4 / 4	1	120			:
Bass	PopRk	2489	MC_Soft Rock _ES	4 / 4	1	120			:
Bass	PopRk	2490	MD_Soft Rock _ES	4 / 4	1	120			:
Bass	PopRk	2491	IA_Soft Rock _ES	4 / 4	1	120			:
Bass	PopRk	2492	FA_Soft Rock _ES	4 / 4	1	120			:
Bass	PopRk	2493	FB_Soft Rock _ES	4 / 4	1	120			:
Bass	PopRk	2494	MA_16BeatBasic1 _XS	4 / 4	4	90			Finger/Slap Bass
Bass	PopRk	2495	MB_16BeatBasic1 _XS	4 / 4	4	90			:
Bass	PopRk	2496	MC_16BeatBasic1 _XS	4 / 4	4	90			:
Bass	PopRk	2497	FA_16BeatBasic1 _XS	4 / 4	1	90			:
Bass	PopRk	2498	FB_16BeatBasic1 _XS	4 / 4	1	90			:
Bass	PopRk	2499	FC_16BeatBasic1 _XS	4 / 4	1	90			:
Bass	PopRk	2500	BA_16BeatBasic1 _XS	4 / 4	1	90			:
Bass	PopRk	2501	MA_16BeatBasic1 _ES	4 / 4	4	90			:
Bass	PopRk	2502	MB_16BeatBasic1 _ES	4 / 4	4	90			:
Bass	PopRk	2503	MC_16BeatBasic1 _ES	4 / 4	4	90			:
Bass	PopRk	2504	FA_16BeatBasic1 _ES	4 / 4	1	90			:
Bass	PopRk	2505	FB_16BeatBasic1 _ES	4 / 4	1	90			:
Bass	PopRk	2506	FC_16BeatBasic1 _ES	4 / 4	1	90			:
Bass	PopRk	2507	BA_16BeatBasic1 _ES	4 / 4	1	90			:
Bass	PopRk	2508	MA_16BeatBasic2 _XS	4 / 4	4	77			Synth Bass
Bass	PopRk	2509	MB_16BeatBasic2 _XS	4 / 4	4	77			:
Bass	PopRk	2510	MC_16BeatBasic2 _XS	4 / 4	4	77			:
Bass	PopRk	2511	FA_16BeatBasic2 _XS	4 / 4	1	77			:
Bass	PopRk	2512	FB_16BeatBasic2 _XS	4 / 4	1	77			:
Bass	PopRk	2513	FC_16BeatBasic2 _XS	4 / 4	1	77			:
Bass	PopRk	2514	BA_16BeatBasic2 _XS	4 / 4	1	77			:
Bass	PopRk	2515	MA_16BeatBasic2 _ES	4 / 4	3	77			:
Bass	PopRk	2516	MB_16BeatBasic2 _ES	4 / 4	4	77			:
Bass	PopRk	2517	MC_16BeatBasic2 _ES	4 / 4	4	77			:
Bass	PopRk	2518	FA_16BeatBasic2 _ES	4 / 4	1	77			:
Bass	PopRk	2519	FB_16BeatBasic2 _ES	4 / 4	1	77			:
Bass	PopRk	2520	FC_16BeatBasic2 _ES	4 / 4	1	77			:
Bass	PopRk	2521	BA_16BeatBasic2 _ES	4 / 4	1	77			:
Bass	PopRk	2522	MA_16Beat Pop 2 _XS	4 / 4	4	94			:
Bass	PopRk	2523	MB_16Beat Pop 2 _XS	4 / 4	4	94			:
Bass	PopRk	2524	MC_16Beat Pop 2 _XS	4 / 4	4	94			:
Bass	PopRk	2525	FA_16Beat Pop 2 _XS	4 / 4	1	94			:
Bass	PopRk	2526	FB_16Beat Pop 2 _XS	4 / 4	1	94			:
Bass	PopRk	2527	FC_16Beat Pop 2 _XS	4 / 4	1	94			:
Bass	PopRk	2528	BA_16Beat Pop 2 _XS	4 / 4	1	94			:
Bass	PopRk	2529	MA_16Beat Pop 2 _ES	4 / 4	4	94			:
Bass	PopRk	2530	MB_16Beat Pop 2 _ES	4 / 4	4	94			:
Bass	PopRk	2531	MC_16Beat Pop 2 _ES	4 / 4	4	94			:
Bass	PopRk	2532	FA_16Beat Pop 2 _ES	4 / 4	1	94			:
Bass	PopRk	2533	FB_16Beat Pop 2 _ES	4 / 4	1	94			:
Bass	PopRk	2534	FC_16Beat Pop 2 _ES	4 / 4	1	94			:
Bass	PopRk	2535	BA_16Beat Pop 2 _ES	4 / 4	1	94			:
Bass	PopRk	2536	MA_16Beat Rock _XS	4 / 4	4	86			:
Bass	PopRk	2537	MB_16Beat Rock _XS	4 / 4	4	86			:
Bass	PopRk	2538	MC_16Beat Rock _XS	4 / 4	4	86			:
Bass	PopRk	2539	FA_16Beat Rock _XS	4 / 4	1	86			:
Bass	PopRk	2540	FB_16Beat Rock _XS	4 / 4	1	86			:
Bass	PopRk	2541	FC_16Beat Rock _XS	4 / 4	1	86			:
Bass	PopRk	2542	BA_16Beat Rock _XS	4 / 4	1	86			:
Bass	PopRk	2543	MA_16Beat Rock _ES	4 / 4	4	86			:
Bass	PopRk	2544	MB_16Beat Rock _ES	4 / 4	4	86			:
Bass	PopRk	2545	MC_16Beat Rock _ES	4 / 4	4	86			:
Bass	PopRk	2546	FA_16Beat Rock _ES	4 / 4	1	86			:
Bass	PopRk	2547	FB_16Beat Rock _ES	4 / 4	1	86			:
Bass	PopRk	2548	FC_16Beat Rock _ES	4 / 4	1	86			:
Bass	PopRk	2549	BA_16Beat Rock _ES	4 / 4	1	86			:
Bass	PopRk	2550	MA_Piano Club _ES	4 / 4	2	96			Finger Bass
Bass	PopRk	2551	MB_Piano Club _ES	4 / 4	2	96			:
Bass	PopRk	2552	MC_Piano Club _ES	4 / 4	2	96			:
Bass	PopRk	2553	MD_Piano Club _ES	4 / 4	1	96			:
Bass	PopRk	2554	IA_Piano Club _ES	4 / 4	2	96			:
Bass	PopRk	2555	FA_Piano Club _ES	4 / 4	1	96			:
Bass	PopRk	2556	FB_Piano Club _ES	4 / 4	1	96			:
Bass	PopRk	2557	FC_Piano Club _ES	4 / 4	4	96			:
Bass	PopRk	2558	MA_Analog Pop _ES	4 / 4	2	93			Pick Bass
Bass	PopRk	2559	MB_Analog Pop _ES	4 / 4	2	93			:
Bass	PopRk	2560	MC_Analog Pop _ES	4 / 4	2	93			:
Bass	PopRk	2561	MD_Analog Pop _ES	4 / 4	4	93			:
Bass	PopRk	2562	IA_Analog Pop _ES	4 / 4	2	93			:
Bass	PopRk	2563	FA_Analog Pop _ES	4 / 4	1	93			:
Bass	PopRk	2564	FB_Analog Pop _ES	4 / 4	1	93			:
Bass	PopRk	2565	FC_Analog Pop _ES	4 / 4	2	93			:
Bass	PopRk	2566	MA_6/8 Pop _XS	4 / 4	4	100			Finger/Slap Bass
Bass	PopRk	2567	MB_6/8 Pop _XS	4 / 4	4	100			:

Main Category	Sub Category	ARP No.	ARP Name	Time Signature	Length	Original Tempo	Accent	Random SFX	Voice Type
Bass	PopRk	2568	MC_6/8 Pop _XS	4 / 4	4	100			Finger/Slap Bass
Bass	PopRk	2569	FA_6/8 Pop _XS	4 / 4	1	100			:
Bass	PopRk	2570	FB_6/8 Pop _XS	4 / 4	1	100			:
Bass	PopRk	2571	FC_6/8 Pop _XS	4 / 4	1	100			:
Bass	PopRk	2572	BA_6/8 Pop _XS	4 / 4	1	100			:
Bass	PopRk	2573	EA_6/8 Pop _XS	4 / 4	3	123			:
Bass	PopRk	2574	MA_6/8 Pop _ES	4 / 4	4	100			:
Bass	PopRk	2575	MB_6/8 Pop _ES	4 / 4	4	100			:
Bass	PopRk	2576	MC_6/8 Pop _ES	4 / 4	4	100			:
Bass	PopRk	2577	FA_6/8 Pop _ES	4 / 4	1	100			:
Bass	PopRk	2578	FB_6/8 Pop _ES	4 / 4	1	100			:
Bass	PopRk	2579	FC_6/8 Pop _ES	4 / 4	1	100			:
Bass	PopRk	2580	BA_6/8 Pop _ES	4 / 4	1	100			:
Bass	Balad	2581	MA_Unplugged 3 _XS	4 / 4	4	113			Acoustic Bass
Bass	Balad	2582	MB_Unplugged 3 _XS	4 / 4	4	113			:
Bass	Balad	2583	MC_Unplugged 3 _XS	4 / 4	4	113			:
Bass	Balad	2584	FA_Unplugged 3 _XS	4 / 4	1	113			:
Bass	Balad	2585	FB_Unplugged 3 _XS	4 / 4	1	113			:
Bass	Balad	2586	FC_Unplugged 3 _XS	4 / 4	1	113			:
Bass	Balad	2587	BA_Unplugged 3 _XS	4 / 4	1	113			:
Bass	Balad	2588	MA_Unplugged 3 _ES	4 / 4	4	113			:
Bass	Balad	2589	MB_Unplugged 3 _ES	4 / 4	4	113			:
Bass	Balad	2590	MC_Unplugged 3 _ES	4 / 4	4	113			:
Bass	Balad	2591	FA_Unplugged 3 _ES	4 / 4	1	113			:
Bass	Balad	2592	FB_Unplugged 3 _ES	4 / 4	1	113			:
Bass	Balad	2593	FC_Unplugged 3 _ES	4 / 4	1	113			:
Bass	Balad	2594	BA_Unplugged 3 _ES	4 / 4	1	113			:
Bass	Balad	2595	MA_8Beat Slow _XS	4 / 4	4	78			Finger Bass
Bass	Balad	2596	MB_8Beat Slow _XS	4 / 4	4	78			:
Bass	Balad	2597	MC_8Beat Slow _XS	4 / 4	4	78			:
Bass	Balad	2598	FA_8Beat Slow _XS	4 / 4	1	78			:
Bass	Balad	2599	FB_8Beat Slow _XS	4 / 4	1	78			:
Bass	Balad	2600	FC_8Beat Slow _XS	4 / 4	1	78			:
Bass	Balad	2601	BA_8Beat Slow _XS	4 / 4	1	78			:
Bass	Balad	2602	MA_8Beat Slow _ES	4 / 4	4	78			:
Bass	Balad	2603	MB_8Beat Slow _ES	4 / 4	4	78			:
Bass	Balad	2604	MC_8Beat Slow _ES	4 / 4	4	78			:
Bass	Balad	2605	FA_8Beat Slow _ES	4 / 4	1	78			:
Bass	Balad	2606	FB_8Beat Slow _ES	4 / 4	1	78			:
Bass	Balad	2607	FC_8Beat Slow _ES	4 / 4	1	78			:
Bass	Balad	2608	BA_8Beat Slow _ES	4 / 4	1	78			:
Bass	Balad	2609	MA_Slowfeel _ES	4 / 4	1	74			Fretless Bass
Bass	Balad	2610	MB_Slowfeel _ES	4 / 4	1	74			:
Bass	Balad	2611	MC_Slowfeel _ES	4 / 4	1	74			:
Bass	Balad	2612	MD_Slowfeel _ES	4 / 4	1	74			:
Bass	Balad	2613	IA_Slowfeel _ES	4 / 4	2	74			:
Bass	Balad	2614	FA_Slowfeel _ES	4 / 4	1	74			:
Bass	Balad	2615	FB_Slowfeel _ES	4 / 4	1	74			:
Bass	Balad	2616	FC_Slowfeel _ES	4 / 4	2	74			:
Bass	Balad	2617	MA_16Bt Ballad1 _XS	4 / 4	4	75			Finger Bass
Bass	Balad	2618	MB_16Bt Ballad1 _XS	4 / 4	4	75			:
Bass	Balad	2619	MC_16Bt Ballad1 _XS	4 / 4	4	75			:
Bass	Balad	2620	FA_16Bt Ballad1 _XS	4 / 4	1	75			:
Bass	Balad	2621	FB_16Bt Ballad1 _XS	4 / 4	1	75			:
Bass	Balad	2622	FC_16Bt Ballad1 _XS	4 / 4	1	75			:
Bass	Balad	2623	BA_16Bt Ballad1 _XS	4 / 4	1	75			:
Bass	Balad	2624	MA_16Bt Ballad1 _ES	4 / 4	4	75			:
Bass	Balad	2625	MB_16Bt Ballad1 _ES	4 / 4	4	75			:
Bass	Balad	2626	MC_16Bt Ballad1 _ES	4 / 4	4	75			:
Bass	Balad	2627	FA_16Bt Ballad1 _ES	4 / 4	1	75			:
Bass	Balad	2628	FB_16Bt Ballad1 _ES	4 / 4	1	75			:
Bass	Balad	2629	FC_16Bt Ballad1 _ES	4 / 4	1	75			:
Bass	Balad	2630	BA_16Bt Ballad1 _ES	4 / 4	1	75			:
Bass	Balad	2631	MA_6/8 Ballad _XS	6 / 8	4	87			Finger/Slap Bass
Bass	Balad	2632	MB_6/8 Ballad _XS	6 / 8	4	87			:
Bass	Balad	2633	MC_6/8 Ballad _XS	6 / 8	4	87			:
Bass	Balad	2634	FA_6/8 Ballad _XS	6 / 8	1	87			:
Bass	Balad	2635	FB_6/8 Ballad _XS	6 / 8	1	87			:
Bass	Balad	2636	FC_6/8 Ballad _XS	6 / 8	1	87			:
Bass	Balad	2637	BA_6/8 Ballad _XS	6 / 8	1	87			:
Bass	Balad	2638	EA_6/8 Ballad _XS	6 / 8	6	87			:
Bass	Balad	2639	EB_6/8 Ballad _XS	6 / 8	6	87			:
Bass	Balad	2640	MA_6/8 Ballad _ES	6 / 8	4	87			:
Bass	Balad	2641	MB_6/8 Ballad _ES	6 / 8	4	87			:
Bass	Balad	2642	MC_6/8 Ballad _ES	6 / 8	4	87			:
Bass	Balad	2643	FA_6/8 Ballad _ES	6 / 8	1	87			:
Bass	Balad	2644	FB_6/8 Ballad _ES	6 / 8	1	87			:
Bass	Balad	2645	FC_6/8 Ballad _ES	6 / 8	1	87			:
Bass	Balad	2646	BA_6/8 Ballad _ES	6 / 8	1	87			:
Bass	HipHp	2647	MA_New Hip Hop _XS	4 / 4	2	85			Synth Bass
Bass	HipHp	2648	MB_New Hip Hop _XS	4 / 4	2	85			:
Bass	HipHp	2649	MC_New Hip Hop _XS	4 / 4	2	85			:
Bass	HipHp	2650	FA_New Hip Hop _XS	4 / 4	1	85			:

Main Category	Sub Category	ARP No.	ARP Name	Time Signature	Length	Original Tempo	Accent	Random SFX	Voice Type
Bass	HipHp	2651	FB_New Hip Hop _XS	4 / 4	1	85			Synth Bass
Bass	HipHp	2652	FC_New Hip Hop _XS	4 / 4	1	85			:
Bass	HipHp	2653	BA_New Hip Hop _XS	4 / 4	1	85			:
Bass	HipHp	2654	EA_New Hip Hop _XS	4 / 4	3	85			:
Bass	HipHp	2655	EB_New Hip Hop _XS	4 / 4	3	85			:
Bass	HipHp	2656	MA_East Coast _XS	4 / 4	2	103			:
Bass	HipHp	2657	MB_East Coast _XS	4 / 4	2	103			:
Bass	HipHp	2658	MC_East Coast _XS	4 / 4	2	103			:
Bass	HipHp	2659	MD_East Coast _XS	4 / 4	2	103			:
Bass	HipHp	2660	MA_East Coast _ES	4 / 4	2	103			:
Bass	HipHp	2661	MB_East Coast _ES	4 / 4	2	103			:
Bass	HipHp	2662	MC_East Coast _ES	4 / 4	2	103			:
Bass	HipHp	2663	MD_East Coast _ES	4 / 4	2	103			:
Bass	HipHp	2664	MA_West Coast _XS	4 / 4	2	97			:
Bass	HipHp	2665	MB_West Coast _XS	4 / 4	2	97			:
Bass	HipHp	2666	MC_West Coast _XS	4 / 4	2	97			:
Bass	HipHp	2667	MD_West Coast _XS	4 / 4	2	97			:
Bass	HipHp	2668	MA_West Coast _ES	4 / 4	2	97			:
Bass	HipHp	2669	MB_West Coast _ES	4 / 4	2	97			:
Bass	HipHp	2670	MC_West Coast _ES	4 / 4	2	97			:
Bass	HipHp	2671	MD_West Coast _ES	4 / 4	2	97			:
Bass	HipHp	2672	MA_South Rap 1 _XS	4 / 4	4	98			:
Bass	HipHp	2673	MB_South Rap 1 _XS	4 / 4	4	98			:
Bass	HipHp	2674	MC_South Rap 1 _XS	4 / 4	4	98			:
Bass	HipHp	2675	MD_South Rap 1 _XS	4 / 4	4	98			:
Bass	HipHp	2676	MA_South Rap 1 _ES	4 / 4	4	98			:
Bass	HipHp	2677	MB_South Rap 1 _ES	4 / 4	4	98			:
Bass	HipHp	2678	MC_South Rap 1 _ES	4 / 4	4	98			:
Bass	HipHp	2679	MD_South Rap 1 _ES	4 / 4	4	98			:
Bass	HipHp	2680	MA_South Rap 2 _XS	4 / 4	2	90			:
Bass	HipHp	2681	MB_South Rap 2 _XS	4 / 4	2	90			:
Bass	HipHp	2682	MC_South Rap 2 _XS	4 / 4	2	90			:
Bass	HipHp	2683	MD_South Rap 2 _XS	4 / 4	2	90			:
Bass	HipHp	2684	MA_South Rap 2 _ES	4 / 4	2	90			:
Bass	HipHp	2685	MB_South Rap 2 _ES	4 / 4	2	90			:
Bass	HipHp	2686	MC_South Rap 2 _ES	4 / 4	2	90			:
Bass	HipHp	2687	MD_South Rap 2 _ES	4 / 4	2	90			:
Bass	HipHp	2688	MA_Hip Hop 1 _ES	4 / 4	2	105			:
Bass	HipHp	2689	MB_Hip Hop 1 _ES	4 / 4	2	105			:
Bass	HipHp	2690	MC_Hip Hop 1 _ES	4 / 4	2	105			:
Bass	HipHp	2691	MD_Hip Hop 1 _ES	4 / 4	2	105			:
Bass	HipHp	2692	FA_Hip Hop 1 _ES	4 / 4	1	105			:
Bass	HipHp	2693	FB_Hip Hop 1 _ES	4 / 4	1	105			:
Bass	HipHp	2694	FC_Hip Hop 1 _ES	4 / 4	2	105			:
Bass	HipHp	2695	MA_Hip Hop 2	4 / 4	2	94			:
Bass	HipHp	2696	MB_Hip Hop 2	4 / 4	2	94			:
Bass	HipHp	2697	MC_Hip Hop 2	4 / 4	2	94			:
Bass	HipHp	2698	MD_Hip Hop 2 _ES	4 / 4	2	94			:
Bass	HipHp	2699	FA_Hip Hop 2	4 / 4	1	94			:
Bass	HipHp	2700	FB_Hip Hop 2 _ES	4 / 4	1	94			:
Bass	HipHp	2701	FC_Hip Hop 2 _ES	4 / 4	2	94			:
Bass	HipHp	2702	MA_Hip Hop 3 _ES	4 / 4	2	104			:
Bass	HipHp	2703	MB_Hip Hop 3 _ES	4 / 4	2	104			:
Bass	HipHp	2704	MC_Hip Hop 3 _ES	4 / 4	2	104			:
Bass	HipHp	2705	MD_Hip Hop 3 _ES	4 / 4	2	104			:
Bass	HipHp	2706	FC_Hip Hop 3 _ES	4 / 4	2	104			:
Bass	HipHp	2707	MA_Hip Hop 5 _XS	4 / 4	2	103			:
Bass	HipHp	2708	MB_Hip Hop 5 _XS	4 / 4	4	103			:
Bass	HipHp	2709	MC_Hip Hop 5 _XS	4 / 4	2	103			:
Bass	HipHp	2710	MD_Hip Hop 5 _XS	4 / 4	2	103			:
Bass	HipHp	2711	MA_Hip Hop 5 _ES	4 / 4	2	103			:
Bass	HipHp	2712	MB_Hip Hop 5 _ES	4 / 4	4	103			:
Bass	HipHp	2713	MC_Hip Hop 5 _ES	4 / 4	2	103			:
Bass	HipHp	2714	MD_Hip Hop 5 _ES	4 / 4	2	103			:
Bass	HipHp	2715	MA_Hip Hop 6 _XS	4 / 4	4	96			:
Bass	HipHp	2716	MB_Hip Hop 6 _XS	4 / 4	4	96			:
Bass	HipHp	2717	MC_Hip Hop 6 _XS	4 / 4	4	96			:
Bass	HipHp	2718	FA_Hip Hop 6 _XS	4 / 4	1	96			:
Bass	HipHp	2719	FB_Hip Hop 6 _XS	4 / 4	1	96			:
Bass	HipHp	2720	FC_Hip Hop 6 _XS	4 / 4	1	96			:
Bass	HipHp	2721	BA_Hip Hop 6 _XS	4 / 4	1	96			:
Bass	HipHp	2722	MA_Hip Break _XS	4 / 4	4	98			:
Bass	HipHp	2723	MB_Hip Break _XS	4 / 4	4	98			:
Bass	HipHp	2724	MC_Hip Break _XS	4 / 4	4	98			:
Bass	HipHp	2725	FA_Hip Break _XS	4 / 4	1	98			:
Bass	HipHp	2726	FB_Hip Break _XS	4 / 4	1	98			:
Bass	HipHp	2727	FC_Hip Break _XS	4 / 4	1	98			:
Bass	HipHp	2728	BA_Hip Break _XS	4 / 4	1	98			:
Bass	HipHp	2729	MA_Hip Rock 1 _XS	4 / 4	4	90			:
Bass	HipHp	2730	MB_Hip Rock 1 _XS	4 / 4	4	90			:
Bass	HipHp	2731	MC_Hip Rock 1 _XS	4 / 4	4	90			:
Bass	HipHp	2732	FA_Hip Rock 1 _XS	4 / 4	1	90			:
Bass	HipHp	2733	FB_Hip Rock 1 _XS	4 / 4	1	90			:

Main Category	Sub Category	ARP No.	ARP Name	Time Signature	Length	Original Tempo	Accent	Random SFX	Voice Type
Bass	HipHp	2734	MA_Hip Rock 2 _XS	4 / 4	4	132			Finger Bass
Bass	HipHp	2735	MB_Hip Rock 2 _XS	4 / 4	4	132			:
Bass	HipHp	2736	MC_Hip Rock 2 _XS	4 / 4	4	132			:
Bass	HipHp	2737	FA_Hip Rock 2 _XS	4 / 4	1	132			:
Bass	HipHp	2738	FB_Hip Rock 2 _XS	4 / 4	1	132			:
Bass	HipHp	2739	FC_Hip Rock 2 _XS	4 / 4	1	132			:
Bass	HipHp	2740	BA_Hip Rock 2 _XS	4 / 4	1	132			:
Bass	HipHp	2741	MA_Hip Reggae _XS	4 / 4	4	92			Synth Bass
Bass	HipHp	2742	MB_Hip Reggae _XS	4 / 4	4	92			:
Bass	HipHp	2743	MC_Hip Reggae _XS	4 / 4	4	92			:
Bass	HipHp	2744	FA_Hip Reggae _XS	4 / 4	1	92			:
Bass	HipHp	2745	FB_Hip Reggae _XS	4 / 4	1	92			:
Bass	HipHp	2746	FC_Hip Reggae _XS	4 / 4	1	92			:
Bass	HipHp	2747	MA_Regeton _XS	4 / 4	4	98			:
Bass	HipHp	2748	MB_Regeton _XS	4 / 4	4	98			:
Bass	HipHp	2749	MC_Regeton _XS	4 / 4	4	98			:
Bass	HipHp	2750	FA_Regeton _XS	4 / 4	1	98			:
Bass	HipHp	2751	FB_Regeton _XS	4 / 4	1	98			:
Bass	HipHp	2752	FC_Regeton _XS	4 / 4	1	98			:
Bass	HipHp	2753	BA_Regeton _XS	4 / 4	1	98			:
Bass	HipHp	2754	MA_Dancehall _XS	4 / 4	4	103			:
Bass	HipHp	2755	MB_Dancehall _XS	4 / 4	4	103			:
Bass	HipHp	2756	MD_Dancehall _XS	4 / 4	4	103			:
Bass	HipHp	2757	FA_Dancehall _XS	4 / 4	1	103			:
Bass	HipHp	2758	FB_Dancehall _XS	4 / 4	1	103			:
Bass	HipHp	2759	FD_Dancehall _XS	4 / 4	1	103			:
Bass	HipHp	2760	BA_Dancehall _XS	4 / 4	1	103			:
Bass	HipHp	2761	EA_Dancehall _XS	4 / 4	3	103			:
Bass	HipHp	2762	MA_ClasicHipHop _ES	4 / 4	2	90			:
Bass	HipHp	2763	MB_ClasicHipHop _ES	4 / 4	2	90			:
Bass	HipHp	2764	MC_ClasicHipHop _ES	4 / 4	2	90			:
Bass	HipHp	2765	MD_ClasicHipHop _ES	4 / 4	2	90			:
Bass	HipHp	2766	FC_ClasicHipHop _ES	4 / 4	1	90			:
Bass	HipHp	2767	MA_ElectroHipBs	4 / 4	4	70			:
Bass	HipHp	2768	MA_GruvBass	4 / 4	2	120			:
Bass	R&B-M	2769	MA_Pop Shuffle1 _XS	4 / 4	4	94			Finger/Slap Bass
Bass	R&B-M	2770	MB_Pop Shuffle1 _XS	4 / 4	4	94			:
Bass	R&B-M	2771	MC_Pop Shuffle1 _XS	4 / 4	4	94			:
Bass	R&B-M	2772	FA_Pop Shuffle1 _XS	4 / 4	1	94			:
Bass	R&B-M	2773	FB_Pop Shuffle1 _XS	4 / 4	1	94			:
Bass	R&B-M	2774	FC_Pop Shuffle1 _XS	4 / 4	1	94			:
Bass	R&B-M	2775	BA_Pop Shuffle1 _XS	4 / 4	1	94			:
Bass	R&B-M	2776	MA_Pop Shuffle1 _ES	4 / 4	4	94			:
Bass	R&B-M	2777	MB_Pop Shuffle1 _ES	4 / 4	4	94			:
Bass	R&B-M	2778	MC_Pop Shuffle1 _ES	4 / 4	4	94			:
Bass	R&B-M	2779	FA_Pop Shuffle1 _ES	4 / 4	1	94			:
Bass	R&B-M	2780	FB_Pop Shuffle1 _ES	4 / 4	1	94			:
Bass	R&B-M	2781	FC_Pop Shuffle1 _ES	4 / 4	1	94			:
Bass	R&B-M	2782	BA_Pop Shuffle1 _ES	4 / 4	1	94			:
Bass	R&B-M	2783	MA_Pop Shuffle2 _XS	4 / 4	4	80			Pick Bass
Bass	R&B-M	2784	MB_Pop Shuffle2 _XS	4 / 4	4	80			:
Bass	R&B-M	2785	MC_Pop Shuffle2 _XS	4 / 4	4	80			:
Bass	R&B-M	2786	FA_Pop Shuffle2 _XS	4 / 4	1	80			:
Bass	R&B-M	2787	FB_Pop Shuffle2 _XS	4 / 4	1	80			:
Bass	R&B-M	2788	FC_Pop Shuffle2 _XS	4 / 4	1	80			:
Bass	R&B-M	2789	BA_Pop Shuffle2 _XS	4 / 4	1	80			:
Bass	R&B-M	2790	MA_Pop Shuffle2 _ES	4 / 4	4	80			:
Bass	R&B-M	2791	MB_Pop Shuffle2 _ES	4 / 4	4	80			:
Bass	R&B-M	2792	MC_Pop Shuffle2 _ES	4 / 4	4	80			:
Bass	R&B-M	2793	FA_Pop Shuffle2 _ES	4 / 4	1	80			:
Bass	R&B-M	2794	FB_Pop Shuffle2 _ES	4 / 4	1	80			:
Bass	R&B-M	2795	FC_Pop Shuffle2 _ES	4 / 4	1	80			:
Bass	R&B-M	2796	BA_Pop Shuffle2 _ES	4 / 4	1	80			:
Bass	R&B-M	2797	MA_R&B Disco _ES	4 / 4	2	110			Synth Bass
Bass	R&B-M	2798	MB_R&B Disco _ES	4 / 4	2	110			:
Bass	R&B-M	2799	MC_R&B Disco _ES	4 / 4	2	110			:
Bass	R&B-M	2800	MD_R&B Disco _ES	4 / 4	2	110			:
Bass	R&B-M	2801	FA_R&B Disco _ES	4 / 4	1	110			:
Bass	R&B-M	2802	FB_R&B Disco _ES	4 / 4	1	110			:
Bass	R&B-M	2803	FC_R&B Disco _ES	4 / 4	2	110			:
Bass	R&B-M	2804	MA_Chart R&B _XS	4 / 4	4	130			:
Bass	R&B-M	2805	MB_Chart R&B _XS	4 / 4	4	130			:
Bass	R&B-M	2806	MC_Chart R&B _XS	4 / 4	4	130			:
Bass	R&B-M	2807	FA_Chart R&B _XS	4 / 4	1	130			:
Bass	R&B-M	2808	FB_Chart R&B _XS	4 / 4	1	130			:
Bass	R&B-M	2809	FC_Chart R&B _XS	4 / 4	1	130			:
Bass	R&B-M	2810	BA_Chart R&B _XS	4 / 4	1	130			:
Bass	R&B-M	2811	EA_Chart R&B _XS	4 / 4	5	130			:
Bass	R&B-M	2812	EB_Chart R&B _XS	4 / 4	10	130			:
Bass	R&B-M	2813	MA_ChartPop1 _XS	4 / 4	4	92			:
Bass	R&B-M	2814	MB_ChartPop1 _XS	4 / 4	4	92			:
Bass	R&B-M	2815	MC_ChartPop1 _XS	4 / 4	4	92			:
Bass	R&B-M	2816	FA_ChartPop1 _XS	4 / 4	1	92			:

Main Category	Sub Category	ARP No.	ARP Name	Time Signature	Length	Original Tempo	Accent	Random SFX	Voice Type
Bass	R&B-M	2817	FB_ChartPop1 _XS	4 / 4	1	92			Synth Bass
Bass	R&B-M	2818	FC_ChartPop1 _XS	4 / 4	1	92			:
Bass	R&B-M	2819	BA_ChartPop1 _XS	4 / 4	1	92			:
Bass	R&B-M	2820	EA_ChartPop1 _XS	4 / 4	3	92			:
Bass	R&B-M	2821	EB_ChartPop1 _XS	4 / 4	3	92			:
Bass	R&B-M	2822	MA_ChartPop2 _XS	4 / 4	2	92			:
Bass	R&B-M	2823	MB_ChartPop2 _XS	4 / 4	2	92			:
Bass	R&B-M	2824	MC_ChartPop2 _XS	4 / 4	2	92			:
Bass	R&B-M	2825	MD_ChartPop2 _XS	4 / 4	2	92			:
Bass	R&B-M	2826	MA_ChartPop2 _ES	4 / 4	2	92			:
Bass	R&B-M	2827	MB_ChartPop2 _ES	4 / 4	2	92			:
Bass	R&B-M	2828	MC_ChartPop2 _ES	4 / 4	2	92			:
Bass	R&B-M	2829	MD_ChartPop2 _ES	4 / 4	2	92			:
Bass	R&B-M	2830	MA_R&B _XS	4 / 4	2	83			:
Bass	R&B-M	2831	MB_R&B _XS	4 / 4	2	83			:
Bass	R&B-M	2832	MC_R&B _XS	4 / 4	2	83			:
Bass	R&B-M	2833	FA_R&B _XS	4 / 4	1	83			:
Bass	R&B-M	2834	FB_R&B _XS	4 / 4	1	83			:
Bass	R&B-M	2835	FC_R&B _XS	4 / 4	1	83			:
Bass	R&B-M	2836	BA_R&B _XS	4 / 4	1	83			:
Bass	R&B-M	2837	EA_R&B _XS	4 / 4	4	83			:
Bass	R&B-M	2838	EB_R&B _XS	4 / 4	4	83			:
Bass	R&B-M	2839	MA_New R&B 1 _XS	4 / 4	2	98			:
Bass	R&B-M	2840	MB_New R&B 1 _XS	4 / 4	2	98			:
Bass	R&B-M	2841	MC_New R&B 1 _XS	4 / 4	2	98			:
Bass	R&B-M	2842	FA_New R&B 1 _XS	4 / 4	1	98			:
Bass	R&B-M	2843	FB_New R&B 1 _XS	4 / 4	1	98			:
Bass	R&B-M	2844	FC_New R&B 1 _XS	4 / 4	1	98			:
Bass	R&B-M	2845	BA_New R&B 1 _XS	4 / 4	1	98			:
Bass	R&B-M	2846	EA_New R&B 1 _XS	4 / 4	3	98			:
Bass	R&B-M	2847	EB_New R&B 1 _XS	4 / 4	4	98			:
Bass	R&B-M	2848	MA_New R&B 2	4 / 4	1	97			:
Bass	R&B-M	2849	MB_New R&B 2	4 / 4	1	97			:
Bass	R&B-M	2850	MC_New R&B 2	4 / 4	1	97			:
Bass	R&B-M	2851	MD_New R&B 2	4 / 4	1	97			:
Bass	R&B-M	2852	IA_New R&B 2	4 / 4	2	97			:
Bass	R&B-M	2853	FA_New R&B 2	4 / 4	1	97			:
Bass	R&B-M	2854	FB_New R&B 2	4 / 4	1	97			:
Bass	R&B-M	2855	FC_New R&B 2	4 / 4	2	97			:
Bass	R&B-M	2856	MB_New R&B 3 _ES	4 / 4	2	90			:
Bass	R&B-M	2857	MC_New R&B 3 _ES	4 / 4	2	90			:
Bass	R&B-M	2858	MD_New R&B 3 _ES	4 / 4	2	90			:
Bass	R&B-M	2859	IA_New R&B 3 _ES	4 / 4	2	90			:
Bass	R&B-M	2860	FA_New R&B 3 _ES	4 / 4	1	90			:
Bass	R&B-M	2861	FB_New R&B 3 _ES	4 / 4	1	90			:
Bass	R&B-M	2862	FC_New R&B 3 _ES	4 / 4	2	90			:
Bass	R&B-M	2863	MA_Pop R&B _XS	4 / 4	4	67			:
Bass	R&B-M	2864	MB_Pop R&B _XS	4 / 4	4	67			:
Bass	R&B-M	2865	MC_Pop R&B _XS	4 / 4	4	67			:
Bass	R&B-M	2866	FA_Pop R&B _XS	4 / 4	1	67			:
Bass	R&B-M	2867	FB_Pop R&B _XS	4 / 4	1	67			:
Bass	R&B-M	2868	FC_Pop R&B _XS	4 / 4	1	67			:
Bass	R&B-M	2869	BA_Pop R&B _XS	4 / 4	1	67			:
Bass	R&B-M	2870	MA_H-R&B Pop _XS	4 / 4	4	140			:
Bass	R&B-M	2871	MB_H-R&B Pop _XS	4 / 4	4	140			:
Bass	R&B-M	2872	MC_H-R&B Pop _XS	4 / 4	4	140			:
Bass	R&B-M	2873	FA_H-R&B Pop _XS	4 / 4	1	140			:
Bass	R&B-M	2874	FC_H-R&B Pop _XS	4 / 4	1	140			:
Bass	R&B-M	2875	BA_H-R&B Pop _XS	4 / 4	1	140			:
Bass	R&B-M	2876	MA_J-R&B Pop _XS	4 / 4	4	100			:
Bass	R&B-M	2877	MB_J-R&B Pop _XS	4 / 4	4	100			:
Bass	R&B-M	2878	MC_J-R&B Pop _XS	4 / 4	4	100			:
Bass	R&B-M	2879	FA_J-R&B Pop _XS	4 / 4	1	100			:
Bass	R&B-M	2880	FB_J-R&B Pop _XS	4 / 4	1	100			:
Bass	R&B-M	2881	FC_J-R&B Pop _XS	4 / 4	1	100			:
Bass	R&B-M	2882	MA_R&B Ana Pop _XS	4 / 4	4	95			:
Bass	R&B-M	2883	MB_R&B Ana Pop _XS	4 / 4	4	95			:
Bass	R&B-M	2884	MC_R&B Ana Pop _XS	4 / 4	4	95			:
Bass	R&B-M	2885	FA_R&B Ana Pop _XS	4 / 4	1	95			:
Bass	R&B-M	2886	FB_R&B Ana Pop _XS	4 / 4	1	95			:
Bass	R&B-M	2887	FC_R&B Ana Pop _XS	4 / 4	1	95			:
Bass	R&B-M	2888	BA_R&B Ana Pop _XS	4 / 4	1	95			:
Bass	R&B-M	2889	MA_R&B Ballad 1 _XS	4 / 4	4	70			:
Bass	R&B-M	2890	MB_R&B Ballad 1 _XS	4 / 4	4	70			:
Bass	R&B-M	2891	MC_R&B Ballad 1 _XS	4 / 4	4	70			:
Bass	R&B-M	2892	FA_R&B Ballad 1 _XS	4 / 4	1	70			:
Bass	R&B-M	2893	FB_R&B Ballad 1 _XS	4 / 4	1	70			:
Bass	R&B-M	2894	FC_R&B Ballad 1 _XS	4 / 4	1	70			:
Bass	R&B-M	2895	BA_R&B Ballad 1 _XS	4 / 4	1	70			:
Bass	R&B-M	2896	MA_R&B Ballad 2 _XS	4 / 4	2	60			:
Bass	R&B-M	2897	MB_R&B Ballad 2 _XS	4 / 4	2	60			:
Bass	R&B-M	2898	MC_R&B Ballad 2 _XS	4 / 4	2	60			:
Bass	R&B-M	2899	MD_R&B Ballad 2 _XS	4 / 4	2	60			:

Main Category	Sub Category	ARP No.	ARP Name	Time Signature	Length	Original Tempo	Accent	Random SFX	Voice Type
Bass	R&B-M	2900	MA_R&B Ballad 2 _ES	4 / 4	2	60			Synth Bass
Bass	R&B-M	2901	MB_R&B Ballad 2 _ES	4 / 4	2	60			:
Bass	R&B-M	2902	MC_R&B Ballad 2 _ES	4 / 4	2	60			:
Bass	R&B-M	2903	MD_R&B Ballad 2 _ES	4 / 4	2	60			:
Bass	R&B-M	2904	MA_R&B Ballad 3 _XS	4 / 4	4	113			:
Bass	R&B-M	2905	MB_R&B Ballad 3 _XS	4 / 4	4	113			:
Bass	R&B-M	2906	MC_R&B Ballad 3 _XS	4 / 4	4	113			:
Bass	R&B-M	2907	FA_R&B Ballad 3 _XS	4 / 4	1	113			:
Bass	R&B-M	2908	FB_R&B Ballad 3 _XS	4 / 4	1	113			:
Bass	R&B-M	2909	FC_R&B Ballad 3 _XS	4 / 4	1	113			:
Bass	R&B-M	2910	BA_R&B Ballad 3 _XS	4 / 4	1	113			:
Bass	R&B-M	2911	MA_6/8 R&B _ES	4 / 4	2	61			:
Bass	R&B-M	2912	MC_6/8 R&B _ES	4 / 4	2	61			:
Bass	R&B-M	2913	MD_6/8 R&B _ES	4 / 4	2	61			:
Bass	R&B-M	2914	FA_6/8 R&B _ES	4 / 4	1	61			:
Bass	R&B-M	2915	FB_6/8 R&B _ES	4 / 4	1	61			:
Bass	R&B-M	2916	FC_6/8 R&B _ES	4 / 4	2	61			:
Bass	R&B-M	2917	MA_Smooth 1 _ES	4 / 4	2	115			:
Bass	R&B-M	2918	MB_Smooth 1 _ES	4 / 4	2	115			:
Bass	R&B-M	2919	MC_Smooth 1 _ES	4 / 4	2	115			:
Bass	R&B-M	2920	MD_Smooth 1 _ES	4 / 4	2	115			:
Bass	R&B-M	2921	FA_Smooth 1 _ES	4 / 4	1	115			:
Bass	R&B-M	2922	FB_Smooth 1 _ES	4 / 4	1	115			:
Bass	R&B-M	2923	FC_Smooth 1 _ES	4 / 4	2	115			:
Bass	R&B-M	2924	MA_Flip Hop 1 _ES	4 / 4	2	132			Finger Bass
Bass	R&B-M	2925	MB_Flip Hop 1 _ES	4 / 4	2	132			:
Bass	R&B-M	2926	MC_Flip Hop 1 _ES	4 / 4	2	132			:
Bass	R&B-M	2927	MD_Flip Hop 1 _ES	4 / 4	2	132			:
Bass	R&B-M	2928	IA_Flip Hop 1 _ES	4 / 4	2	132			:
Bass	R&B-M	2929	MA_New Gospel _ES	4 / 4	2	90			Synth Bass
Bass	R&B-M	2930	MB_New Gospel _ES	4 / 4	2	90			:
Bass	R&B-M	2931	MC_New Gospel _ES	4 / 4	2	90			:
Bass	R&B-M	2932	MD_New Gospel _ES	4 / 4	2	90			:
Bass	R&B-M	2933	FA_New Gospel _ES	4 / 4	1	90			:
Bass	R&B-M	2934	FC_New Gospel _ES	4 / 4	2	90			:
Bass	R&B-C	2935	MA_Soul 2 _ES	4 / 4	4	120			Finger Bass
Bass	R&B-C	2936	MB_Soul 2 _ES	4 / 4	1	120			:
Bass	R&B-C	2937	MC_Soul 2 _ES	4 / 4	4	120			:
Bass	R&B-C	2938	MD_Soul 2 _ES	4 / 4	4	120			:
Bass	R&B-C	2939	MA_Soul 3 _XS	4 / 4	4	88			Synth Bass
Bass	R&B-C	2940	MB_Soul 3 _XS	4 / 4	4	88			:
Bass	R&B-C	2941	MC_Soul 3 _XS	4 / 4	4	88			:
Bass	R&B-C	2942	MD_Soul 3 _XS	4 / 4	4	88			:
Bass	R&B-C	2943	MA_Soul 3 _ES	4 / 4	4	88			:
Bass	R&B-C	2944	MB_Soul 3 _ES	4 / 4	4	88			:
Bass	R&B-C	2945	MC_Soul 3 _ES	4 / 4	4	88			:
Bass	R&B-C	2946	MD_Soul 3 _ES	4 / 4	4	88			:
Bass	R&B-C	2947	MA_Soul Beat _XS	4 / 4	4	124			Finger Bass
Bass	R&B-C	2948	MB_Soul Beat _XS	4 / 4	4	124			:
Bass	R&B-C	2949	MC_Soul Beat _XS	4 / 4	4	124			:
Bass	R&B-C	2950	FA_Soul Beat _XS	4 / 4	1	124			:
Bass	R&B-C	2951	FB_Soul Beat _XS	4 / 4	1	124			:
Bass	R&B-C	2952	FC_Soul Beat _XS	4 / 4	1	124			:
Bass	R&B-C	2953	BA_Soul Beat _XS	4 / 4	1	124			:
Bass	R&B-C	2954	EA_Soul Beat _XS	4 / 4	3	123			:
Bass	R&B-C	2955	EB_Soul Beat _XS	4 / 4	3	123			:
Bass	Funk	2956	MA_Funk 3 _ES	4 / 4	2	132			:
Bass	Funk	2957	MB_Funk 3 _ES	4 / 4	2	132			:
Bass	Funk	2958	MC_Funk 3 _ES	4 / 4	4	132			:
Bass	Funk	2959	MD_Funk 3 _ES	4 / 4	4	132			:
Bass	Funk	2960	IA_Funk 3 _ES	4 / 4	1	132			:
Bass	Funk	2961	FB_Funk 3 _ES	4 / 4	1	132			:
Bass	Funk	2962	MA1_Cool Funk _ES	4 / 4	2	96			:
Bass	Funk	2963	MB1_Cool Funk _ES	4 / 4	2	96			:
Bass	Funk	2964	MC1_Cool Funk _ES	4 / 4	2	96			:
Bass	Funk	2965	MD1_Cool Funk _ES	4 / 4	4	96			:
Bass	Funk	2966	IA1_Cool Funk _ES	4 / 4	2	96			:
Bass	Funk	2967	FA1_Cool Funk _ES	4 / 4	1	96			:
Bass	Funk	2968	FB1_Cool Funk _ES	4 / 4	1	96			:
Bass	Funk	2969	FC1_Cool Funk _ES	4 / 4	1	96			:
Bass	Funk	2970	MA2_Cool Funk _ES	4 / 4	2	96			:
Bass	Funk	2971	MB2_Cool Funk _ES	4 / 4	2	96			:
Bass	Funk	2972	MC2_Cool Funk _ES	4 / 4	2	96			:
Bass	Funk	2973	MD2_Cool Funk _ES	4 / 4	4	96			:
Bass	Funk	2974	IA2_Cool Funk _ES	4 / 4	2	96			:
Bass	Funk	2975	FA2_Cool Funk _ES	4 / 4	1	96			:
Bass	Funk	2976	FB2_Cool Funk _ES	4 / 4	1	96			:
Bass	Funk	2977	FC2_Cool Funk _ES	4 / 4	1	96			:
Bass	Funk	2978	MA_Jazz Funk 2 _ES	4 / 4	2	120			:
Bass	Funk	2979	MB_Jazz Funk 2 _ES	4 / 4	4	120			:
Bass	Funk	2980	MC_Jazz Funk 2 _ES	4 / 4	4	120			:
Bass	Funk	2981	MD_Jazz Funk 2 _ES	4 / 4	4	120			:
Bass	Funk	2982	FC_Jazz Funk 2 _ES	4 / 4	1	120			:

Main Category	Sub Category	ARP No.	ARP Name	Time Signature	Length	Original Tempo	Accent	Random SFX	Voice Type
Bass	Funk	2983	MA_Jazz Funk 3 _XS	4 / 4	4	123			Synth Bass
Bass	Funk	2984	MB_Jazz Funk 3 _XS	4 / 4	4	123			:
Bass	Funk	2985	MC_Jazz Funk 3 _XS	4 / 4	4	123			:
Bass	Funk	2986	MD_Jazz Funk 3 _XS	4 / 4	2	123			:
Bass	Funk	2987	MA_Jazz Funk 3 _ES	4 / 4	4	123			:
Bass	Funk	2988	MB_Jazz Funk 3 _ES	4 / 4	4	123			:
Bass	Funk	2989	MC_Jazz Funk 3 _ES	4 / 4	4	123			:
Bass	Funk	2990	MD_Jazz Funk 3 _ES	4 / 4	2	123			:
Bass	Funk	2991	MA_Club Jazz 1 _XS	4 / 4	4	125			Finger Bass
Bass	Funk	2992	MB_Club Jazz 1 _XS	4 / 4	4	125			:
Bass	Funk	2993	MC_Club Jazz 1 _XS	4 / 4	4	125			:
Bass	Funk	2994	FA_Club Jazz 1 _XS	4 / 4	1	125			:
Bass	Funk	2995	FB_Club Jazz 1 _XS	4 / 4	1	125			:
Bass	Funk	2996	FC_Club Jazz 1 _XS	4 / 4	1	125			:
Bass	Funk	2997	BA_Club Jazz 1 _XS	4 / 4	1	125			:
Bass	Funk	2998	MA_Club Jazz 1 _ES	4 / 4	4	125			:
Bass	Funk	2999	MB_Club Jazz 1 _ES	4 / 4	4	125			:
Bass	Funk	3000	MC_Club Jazz 1 _ES	4 / 4	4	125			:
Bass	Funk	3001	FA_Club Jazz 1 _ES	4 / 4	1	125			:
Bass	Funk	3002	FB_Club Jazz 1 _ES	4 / 4	1	125			:
Bass	Funk	3003	FC_Club Jazz 1 _ES	4 / 4	1	125			:
Bass	Funk	3004	BA_Club Jazz 1 _ES	4 / 4	1	125			:
Bass	Funk	3005	MA_Club Jazz 2 _XS	4 / 4	4	92			:
Bass	Funk	3006	MB_Club Jazz 2 _XS	4 / 4	4	92			:
Bass	Funk	3007	MC_Club Jazz 2 _XS	4 / 4	4	92			:
Bass	Funk	3008	FA_Club Jazz 2 _XS	4 / 4	1	92			:
Bass	Funk	3009	FB_Club Jazz 2 _XS	4 / 4	1	92			:
Bass	Funk	3010	FC_Club Jazz 2 _XS	4 / 4	1	92			:
Bass	Funk	3011	BA_Club Jazz 2 _XS	4 / 4	1	92			:
Bass	Funk	3012	MA_Club Jazz 2 _ES	4 / 4	4	92			:
Bass	Funk	3013	MB_Club Jazz 2 _ES	4 / 4	4	92			:
Bass	Funk	3014	MC_Club Jazz 2 _ES	4 / 4	4	92			:
Bass	Funk	3015	FA_Club Jazz 2 _ES	4 / 4	1	92			:
Bass	Funk	3016	FB_Club Jazz 2 _ES	4 / 4	1	92			:
Bass	Funk	3017	FC_Club Jazz 2 _ES	4 / 4	1	92			:
Bass	Funk	3018	BA_Club Jazz 2 _ES	4 / 4	1	92			:
Bass	Funk	3019	MA_FingerBass1 _ES	4 / 4	1	115			:
Bass	Funk	3020	MA_FingerBass2 _ES	4 / 4	1	115			:
Bass	Funk	3021	MA_FingerBass3 _ES	4 / 4	3	115			:
Bass	Funk	3022	MA_FingerBass4 _ES	4 / 4	1	115			:
Bass	Funk	3023	MA_FingerBass5 _ES	4 / 4	1	115			:
Bass	Funk	3024	MA_FingerBass6 _ES	4 / 4	1	115			:
Bass	Funk	3025	MA_FingerBass7 _ES	4 / 4	2	120			:
Bass	Funk	3026	MA_FingerBass8 _ES	4 / 4	2	150			:
Bass	Funk	3027	MA_FingerBass9 _ES	4 / 4	2	150			:
Bass	Funk	3028	MA_FingerBass10 _ES	4 / 4	2	89			:
Bass	Funk	3029	MA_FingerBass11 _ES	4 / 4	2	89			:
Bass	Funk	3030	MA_FingerBass12 _ES	4 / 4	1	115			:
Bass	Funk	3031	MA_FingerBass13 _ES	4 / 4	1	115			:
Bass	Funk	3032	MA_FingerBass14 _ES	4 / 4	1	115			:
Bass	Funk	3033	MA_FingerBass15 _ES	4 / 4	4	107			:
Bass	Funk	3034	MA_FingerBass16 _ES	4 / 4	4	107			:
Bass	Funk	3035	MA_FingerBass17 _ES	4 / 4	4	107			:
Bass	Funk	3036	MA_FingerBass18 _ES	4 / 4	4	107			:
Bass	Funk	3037	MA_FingerBass19 _ES	4 / 4	4	107			:
Bass	Funk	3038	MA_Slap Bass1	4 / 4	4	120			Slap Bass
Bass	Funk	3039	MA_Slap Bass2	4 / 4	2	120			:
Bass	Funk	3040	MA_Slap Bass3 _ES	4 / 4	1	124			:
Bass	Funk	3041	MA_Slap Bass4 _ES	4 / 4	1	124			:
Bass	Funk	3042	MA_Slap Bass5 _ES	4 / 4	2	124			:
Bass	Funk	3043	MA_Slap Bass6 _ES	4 / 4	1	105			:
Bass	Funk	3044	MA_Slap Bass7 _ES	4 / 4	1	105			:
Bass	Funk	3045	MA_Slap Bass8 _ES	4 / 4	1	105			:
Bass	Funk	3046	MA_Slap Bass9 _ES	4 / 4	2	110			:
Bass	Funk	3047	MA_Slap Bass10 _ES	4 / 4	1	110			:
Bass	Funk	3048	MA_Slap Bass11 _ES	4 / 4	1	90			:
Bass	Funk	3049	MA_Slap Bass12 _ES	4 / 4	3	120			:
Bass	Funk	3050	MA_Slap Bass13 _ES	4 / 4	1	120			:
Bass	Tekno	3051	MA_Techno 1 _ES	4 / 4	4	135			Synth Bass
Bass	Tekno	3052	MB_Techno 1 _ES	4 / 4	8	135			:
Bass	Tekno	3053	MC_Techno 1 _ES	4 / 4	8	135			:
Bass	Tekno	3054	FA_Techno 1 _ES	4 / 4	1	135			:
Bass	Tekno	3055	FB_Techno 1 _ES	4 / 4	1	135			:
Bass	Tekno	3056	FC_Techno 1 _ES	4 / 4	1	135			:
Bass	Tekno	3057	BA_Techno 1 _ES	4 / 4	3	135			:
Bass	Tekno	3058	MB_Techno 2 _ES	4 / 4	4	137			Finger Bass
Bass	Tekno	3059	MC_Techno 2 _ES	4 / 4	4	137			Synth Bass
Bass	Tekno	3060	FA_Techno 2 _ES	4 / 4	1	137			:
Bass	Tekno	3061	FB_Techno 2 _ES	4 / 4	2	137			Finger Bass
Bass	Tekno	3062	BA_Techno 2 _ES	4 / 4	4	137			Synth Bass
Bass	Tekno	3063	MA_Trance 1 _XS	4 / 4	8	142			:
Bass	Tekno	3064	MB_Trance 1 _XS	4 / 4	4	142			:
Bass	Tekno	3065	MC_Trance 1 _XS	4 / 4	16	142			:

Main Category	Sub Category	ARP No.	ARP Name	Time Signature	Length	Original Tempo	Accent	Random SFX	Voice Type
Bass	Tekno	3066	FA_Trance 1 _XS	4 / 4	2	142			Synth Bass
Bass	Tekno	3067	FB_Trance 1 _XS	4 / 4	8	142			:
Bass	Tekno	3068	FC_Trance 1 _XS	4 / 4	8	142			:
Bass	Tekno	3069	MA_Trance 1 _ES	4 / 4	8	142			:
Bass	Tekno	3070	MB_Trance 1 _ES	4 / 4	4	142			:
Bass	Tekno	3071	MC_Trance 1 _ES	4 / 4	16	142			:
Bass	Tekno	3072	FA_Trance 1 _ES	4 / 4	2	142			:
Bass	Tekno	3073	FB_Trance 1 _ES	4 / 4	8	142			:
Bass	Tekno	3074	FC_Trance 1 _ES	4 / 4	8	142			:
Bass	Tekno	3075	MA_Trance 2 _XS	4 / 4	8	135			:
Bass	Tekno	3076	MB_Trance 2 _XS	4 / 4	8	135			:
Bass	Tekno	3077	MC_Trance 2 _XS	4 / 4	8	135			:
Bass	Tekno	3078	FA_Trance 2 _XS	4 / 4	1	135			:
Bass	Tekno	3079	FB_Trance 2 _XS	4 / 4	8	135			:
Bass	Tekno	3080	FC_Trance 2 _XS	4 / 4	1	135			:
Bass	Tekno	3081	BA_Trance 2 _XS	4 / 4	1	135			:
Bass	Tekno	3082	MA_Trance 2 _ES	4 / 4	8	135			:
Bass	Tekno	3083	MB_Trance 2 _ES	4 / 4	8	135			:
Bass	Tekno	3084	MC_Trance 2 _ES	4 / 4	8	135			:
Bass	Tekno	3085	FA_Trance 2 _ES	4 / 4	1	135			:
Bass	Tekno	3086	FB_Trance 2 _ES	4 / 4	8	135			:
Bass	Tekno	3087	FC_Trance 2 _ES	4 / 4	1	135			:
Bass	Tekno	3088	BA_Trance 2 _ES	4 / 4	1	135			:
Bass	Tekno	3089	MA_Trance 3 _XS	4 / 4	2	140			:
Bass	Tekno	3090	MB_Trance 3 _XS	4 / 4	2	140			:
Bass	Tekno	3091	MC_Trance 3 _XS	4 / 4	3	140			:
Bass	Tekno	3092	FA_Trance 3 _XS	4 / 4	2	140			:
Bass	Tekno	3093	FB_Trance 3 _XS	4 / 4	2	140			:
Bass	Tekno	3094	FC_Trance 3 _XS	4 / 4	4	140			:
Bass	Tekno	3095	BA_Trance 3 _XS	4 / 4	1	140			:
Bass	Tekno	3096	MA_Trance 3 _ES	4 / 4	2	140			:
Bass	Tekno	3097	MB_Trance 3 _ES	4 / 4	2	140			:
Bass	Tekno	3098	MC_Trance 3 _ES	4 / 4	3	140			:
Bass	Tekno	3099	FA_Trance 3 _ES	4 / 4	2	140			:
Bass	Tekno	3100	FB_Trance 3 _ES	4 / 4	2	140			:
Bass	Tekno	3101	FC_Trance 3 _ES	4 / 4	4	140			:
Bass	Tekno	3102	BA_Trance 3 _ES	4 / 4	1	140			:
Bass	Tekno	3103	MA_Trance 4 _XS	4 / 4	4	130			:
Bass	Tekno	3104	MB_Trance 4 _XS	4 / 4	2	130			:
Bass	Tekno	3105	MC_Trance 4 _XS	4 / 4	4	130			:
Bass	Tekno	3106	FA_Trance 4 _XS	4 / 4	4	130			:
Bass	Tekno	3107	FB_Trance 4 _XS	4 / 4	2	130			:
Bass	Tekno	3108	FC_Trance 4 _XS	4 / 4	4	130			:
Bass	Tekno	3109	BA_Trance 4 _XS	4 / 4	2	130			:
Bass	Tekno	3110	MA_Trance 4 _ES	4 / 4	4	130			:
Bass	Tekno	3111	MB_Trance 4 _ES	4 / 4	2	130			:
Bass	Tekno	3112	MC_Trance 4 _ES	4 / 4	4	130			:
Bass	Tekno	3113	FA_Trance 4 _ES	4 / 4	4	130			:
Bass	Tekno	3114	FB_Trance 4 _ES	4 / 4	2	130			:
Bass	Tekno	3115	FC_Trance 4 _ES	4 / 4	4	130			:
Bass	Tekno	3116	BA_Trance 4 _ES	4 / 4	2	130			:
Bass	Tekno	3117	MA_Trance 5 _ES	4 / 4	1	140			:
Bass	Tekno	3118	FA_Trance 5 _ES	4 / 4	1	140			:
Bass	Tekno	3119	FC_Trance 5 _ES	4 / 4	4	140			:
Bass	Tekno	3120	MA_TranceBassA1 _ES	4 / 4	2	143			:
Bass	Tekno	3121	MA_TranceBassA2 _ES	4 / 4	1	143			:
Bass	Tekno	3122	MA_TranceBassA3 _ES	4 / 4	1	143			:
Bass	Tekno	3123	MA_TranceBassA4 _ES	4 / 4	1	143			:
Bass	Tekno	3124	MA_TranceBassA5 _ES	4 / 4	1	143			:
Bass	Tekno	3125	MA_TranceBassB1	4 / 4	1	143			:
Bass	Tekno	3126	MA_TranceBassB2 _ES	4 / 4	1	143			:
Bass	Tekno	3127	MA_TranceBassB3 _ES	4 / 4	1	143			:
Bass	Tekno	3128	MA_TranceBassB4 _ES	4 / 4	1	143			:
Bass	Tekno	3129	MA_TranceBassB5 _ES	4 / 4	1	143			:
Bass	Tekno	3130	MA_Trance Vision	4 / 4	1	134			:
Bass	Tekno	3131	MB_Trance Vision	4 / 4	1	134			:
Bass	Tekno	3132	MC_Trance Vision	4 / 4	1	134			:
Bass	Tekno	3133	MD_Trance Vision	4 / 4	1	134			:
Bass	Tekno	3134	MA_Dream Trance	4 / 4	1	140			:
Bass	Tekno	3135	MB_Dream Trance	4 / 4	1	140			:
Bass	Tekno	3136	MC_Dream Trance	4 / 4	1	140			:
Bass	Tekno	3137	MA_Electrix	4 / 4	1	119			:
Bass	Tekno	3138	MB_Electrix	4 / 4	1	119			:
Bass	Tekno	3139	MC_Electrix	4 / 4	1	119			:
Bass	Tekno	3140	MA_Cool Breakz	4 / 4	1	116			:
Bass	Tekno	3141	MB_Cool Breakz	4 / 4	1	116			:
Bass	Tekno	3142	MA_Synthlines	4 / 4	1	124			:
Bass	Tekno	3143	MB_Synthlines	4 / 4	1	124			:
Bass	Tekno	3144	MC_Synthlines	4 / 4	1	124			:
Bass	Tekno	3145	MA_Noize Xpress	4 / 4	4	70			:
Bass	Tekno	3146	MA_Tek Bass1	4 / 4	1	138			:
Bass	Tekno	3147	MA_Tek Bass2	4 / 4	1	138			:
Bass	Tekno	3148	MA_Tek Bass3	4 / 4	8	138			:

Main Category	Sub Category	ARP No.	ARP Name	Time Signature	Length	Original Tempo	Accent	Random SFX	Voice Type
Bass	Tekno	3149	MA_Acid Bass1	4 / 4	1	86			Synth Bass
Bass	Tekno	3150	MA_Acid Bass2	4 / 4	1	120			:
Bass	Tekno	3151	MA_Acid Flux	4 / 4	1	130			:
Bass	Tekno	3152	MA_Octaver	4 / 4	1	120			:
Bass	Tekno	3153	MA_Twister	4 / 4	1	135			:
Bass	Tekno	3154	MA_Cyborg	4 / 4	1	90			:
Bass	Tekno	3155	MA_LoRidr	4 / 4	1	90			:
Bass	Tekno	3156	MA_Kronic	4 / 4	1	100			:
Bass	Tekno	3157	MA_Triplet	4 / 4	1	120			:
Bass	Tekno	3158	MA_Tronica	4 / 4	1	120			:
Bass	Tekno	3159	MA_Wazzo	4 / 4	1	94			:
Bass	Tekno	3160	MA_Swing Bass	4 / 4	2	132			:
Bass	Tekno	3161	MA_Synth Bass1 _ES	4 / 4	1	120			:
Bass	Tekno	3162	MA_Synth Bass2 _ES	4 / 4	1	120			:
Bass	Tekno	3163	MA_Synth Bass3 _ES	4 / 4	1	120			:
Bass	Tekno	3164	MA_Synth Bass4 _ES	4 / 4	1	120			:
Bass	Tekno	3165	MA_Synth Bass5 _ES	4 / 4	1	120			:
Bass	House	3166	MA_Dream Dance _ES	4 / 4	2	136			:
Bass	House	3167	MB_Dream Dance _ES	4 / 4	1	136			:
Bass	House	3168	MC_Dream Dance _ES	4 / 4	4	136			:
Bass	House	3169	MD_Dream Dance _ES	4 / 4	4	136			:
Bass	House	3170	FA_Dream Dance _ES	4 / 4	1	136			:
Bass	House	3171	MA_Ibiza _ES	4 / 4	2	135			:
Bass	House	3172	MB_Ibiza _ES	4 / 4	2	135			:
Bass	House	3173	MC_Ibiza _ES	4 / 4	2	135			:
Bass	House	3174	MD_Ibiza _ES	4 / 4	2	135			:
Bass	House	3175	IA_Ibiza _ES	4 / 4	1	135			:
Bass	House	3176	FC_Ibiza _ES	4 / 4	4	135			:
Bass	House	3177	MA_Retro Pop _ES	4 / 4	2	126			:
Bass	House	3178	MA_Disco House _XS	4 / 4	4	126			:
Bass	House	3179	MB_Disco House _XS	4 / 4	4	126			:
Bass	House	3180	MC_Disco House _XS	4 / 4	4	126			:
Bass	House	3181	FA_Disco House _XS	4 / 4	1	126			:
Bass	House	3182	FB_Disco House _XS	4 / 4	1	126			:
Bass	House	3183	FC_Disco House _XS	4 / 4	1	126			:
Bass	House	3184	BA_Disco House _XS	4 / 4	1	126			:
Bass	House	3185	MA_Club House _ES	4 / 4	1	128			:
Bass	House	3186	MB_Club House _ES	4 / 4	1	128			:
Bass	House	3187	MC_Club House _ES	4 / 4	1	128			:
Bass	House	3188	MD_Club House _ES	4 / 4	1	128			:
Bass	House	3189	IA_Club House _ES	4 / 4	1	128			:
Bass	House	3190	FA_Club House _ES	4 / 4	1	128			:
Bass	House	3191	FB_Club House _ES	4 / 4	1	128			:
Bass	House	3192	MA_Garage 2 _ES	4 / 4	2	127			:
Bass	House	3193	MB_Garage 2 _ES	4 / 4	2	127			:
Bass	House	3194	MC_Garage 2 _ES	4 / 4	2	127			:
Bass	House	3195	MD_Garage 2 _ES	4 / 4	2	127			:
Bass	House	3196	IA_Garage 2 _ES	4 / 4	2	127			:
Bass	House	3197	FC_Garage 2 _ES	4 / 4	2	127			:
Bass	House	3198	MA_House Bass _ES	4 / 4	4	120			:
Bass	D&B	3199	MA_Big Beat 1 _ES	4 / 4	4	115			Finger Bass
Bass	D&B	3200	MB_Big Beat 1 _ES	4 / 4	4	115			:
Bass	D&B	3201	MC_Big Beat 1 _ES	4 / 4	4	115			:
Bass	D&B	3202	FA_Big Beat 1 _ES	4 / 4	1	115			:
Bass	D&B	3203	FB_Big Beat 1 _ES	4 / 4	1	115			:
Bass	D&B	3204	FC_Big Beat 1 _ES	4 / 4	1	115			:
Bass	D&B	3205	BA_Big Beat 1 _ES	4 / 4	1	115			:
Bass	D&B	3206	MA_Breakbeats 1 _ES	4 / 4	4	115			Synth Bass
Bass	D&B	3207	MB_Breakbeats 1 _ES	4 / 4	4	115			:
Bass	D&B	3208	MC_Breakbeats 1 _ES	4 / 4	2	115			:
Bass	D&B	3209	FA_Breakbeats 1 _ES	4 / 4	1	115			:
Bass	D&B	3210	FB_Breakbeats 1 _ES	4 / 4	1	115			:
Bass	D&B	3211	FC_Breakbeats 1 _ES	4 / 4	1	115			:
Bass	D&B	3212	BA_Breakbeats 1 _ES	4 / 4	1	115			:
Bass	D&B	3213	MA_Breakbeats 2 _ES	4 / 4	4	88			:
Bass	D&B	3214	MB_Breakbeats 2 _ES	4 / 4	4	88			:
Bass	D&B	3215	MC_Breakbeats 2 _ES	4 / 4	4	88			:
Bass	D&B	3216	FA_Breakbeats 2 _ES	4 / 4	1	88			:
Bass	D&B	3217	FB_Breakbeats 2 _ES	4 / 4	1	88			:
Bass	D&B	3218	FC_Breakbeats 2 _ES	4 / 4	1	88			:
Bass	D&B	3219	BA_Breakbeats 2 _ES	4 / 4	1	88			:
Bass	Chill	3220	MA_Ambient 1 _XS	4 / 4	4	102			:
Bass	Chill	3221	MB_Ambient 1 _XS	4 / 4	4	102			:
Bass	Chill	3222	MC_Ambient 1 _XS	4 / 4	4	102			:
Bass	Chill	3223	FB_Ambient 1 _XS	4 / 4	1	102			:
Bass	Chill	3224	FC_Ambient 1 _XS	4 / 4	1	102			:
Bass	Chill	3225	MA_Ambient 1 _ES	4 / 4	4	102			:
Bass	Chill	3226	MB_Ambient 1 _ES	4 / 4	4	102			:
Bass	Chill	3227	MC_Ambient 1 _ES	4 / 4	4	102			:
Bass	Chill	3228	FB_Ambient 1 _ES	4 / 4	1	102			:
Bass	Chill	3229	FC_Ambient 1 _ES	4 / 4	1	102			:
Bass	Chill	3230	MA_Ambient 2 _XS	4 / 4	4	111			:
Bass	Chill	3231	MB_Ambient 2 _XS	4 / 4	2	111			:

Main Category	Sub Category	ARP No.	ARP Name	Time Signature	Length	Original Tempo	Accent	Random SFX	Voice Type
Bass	Chill	3232	MC_Ambient 2 _XS	4 / 4	4	111			Synth Bass
Bass	Chill	3233	FA_Ambient 2 _XS	4 / 4	1	111			:
Bass	Chill	3234	FB_Ambient 2 _XS	4 / 4	8	111			:
Bass	Chill	3235	FC_Ambient 2 _XS	4 / 4	1	111			:
Bass	Chill	3236	BA_Ambient 2 _XS	4 / 4	2	111			:
Bass	Chill	3237	MA_Ambient 2 _ES	4 / 4	4	111			:
Bass	Chill	3238	MB_Ambient 2 _ES	4 / 4	2	111			:
Bass	Chill	3239	MC_Ambient 2 _ES	4 / 4	4	111			:
Bass	Chill	3240	FA_Ambient 2 _ES	4 / 4	1	111			:
Bass	Chill	3241	FB_Ambient 2 _ES	4 / 4	8	111			:
Bass	Chill	3242	FC_Ambient 2 _ES	4 / 4	1	111			:
Bass	Chill	3243	BA_Ambient 2 _ES	4 / 4	2	111			:
Bass	Chill	3244	MB_Chill Out _ES	4 / 4	2	79			:
Bass	Chill	3245	MC_Chill Out _ES	4 / 4	4	79			:
Bass	Chill	3246	MD_Chill Out _ES	4 / 4	1	79			Finger Bass
Bass	Chill	3247	IA_Chill Out _ES	4 / 4	3	79			:
Bass	Chill	3248	FA_Chill Out _ES	4 / 4	1	79			Finger Bass (PB Range=12)
Bass	Chill	3249	FC_Chill Out _ES	4 / 4	4	79			Finger Bass
Bass	Chill	3250	MA_ChillKitBass	4 / 4	4	70			Synth Bass
Bass	Chill	3251	MA_ClubtechBas1	4 / 4	1	70			:
Bass	Chill	3252	MA_ClubtechBas2	4 / 4	1	70			:
Bass	Chill	3253	MA_ClubtechBas3	4 / 4	1	70			:
Bass	Chill	3254	MA_HeavyChillBs	4 / 4	4	70			:
Bass	Chill	3255	MA_HeartbreakBs	4 / 4	4	70			:
Bass	Chill	3256	MA_PopBreaksBas	4 / 4	4	70			:
Bass	Chill	3257	MB_Synth Pop _ES	4 / 4	2	90			:
Bass	Chill	3258	MD_Synth Pop _ES	4 / 4	2	90			:
Bass	Chill	3259	FC_Synth Pop _ES	4 / 4	2	90			:
Bass	Chill	3260	MA_Eighties	4 / 4	1	120			:
Bass	Chill	3261	MA_Eighties AF1	4 / 4	1	120			:
Bass	Chill	3262	MB_Eighties	4 / 4	1	120			:
Bass	Chill	3263	MB_Eighties AF1	4 / 4	1	120			:
Bass	Chill	3264	MC_Eighties	4 / 4	1	120			:
Bass	Chill	3265	MC_Eighties AF1	4 / 4	1	120			:
Bass	Jazz	3266	MA_AcousticJaz/1 _ES	4 / 4	4	204			Acoustic Bass
Bass	Jazz	3267	MA_AcousticJaz/2 _ES	4 / 4	4	204			:
Bass	Jazz	3268	MA_AcousticJaz/3 _ES	4 / 4	4	204			:
Bass	Jazz	3269	MA_AcousticJaz/4 _ES	4 / 4	4	204			:
Bass	Jazz	3270	MB_AcousticJaz/1 _ES	4 / 4	4	204			:
Bass	Jazz	3271	MB_AcousticJaz/2 _ES	4 / 4	4	204			:
Bass	Jazz	3272	MB_AcousticJaz/3 _ES	4 / 4	4	204			:
Bass	Jazz	3273	MB_AcousticJaz/4 _ES	4 / 4	4	204			:
Bass	Jazz	3274	MC_AcousticJaz/1 _ES	4 / 4	4	204			:
Bass	Jazz	3275	MC_AcousticJaz/2 _ES	4 / 4	4	204			:
Bass	Jazz	3276	MC_AcousticJaz/3 _ES	4 / 4	4	204			:
Bass	Jazz	3277	MC_AcousticJaz/4 _ES	4 / 4	4	204			:
Bass	Jazz	3278	MD_AcousticJaz/1 _ES	4 / 4	4	204			:
Bass	Jazz	3279	MD_AcousticJaz/2 _ES	4 / 4	4	204			:
Bass	Jazz	3280	MD_AcousticJaz/3 _ES	4 / 4	4	204			:
Bass	Jazz	3281	MD_AcousticJaz/4 _ES	4 / 4	4	204			:
Bass	Jazz	3282	IA_AcousticJazz _ES	4 / 4	4	204			:
Bass	Jazz	3283	FA_AcousticJazz _ES	4 / 4	1	204			:
Bass	Jazz	3284	FB_AcousticJazz _ES	4 / 4	1	204			:
Bass	Jazz	3285	FC_AcousticJazz _ES	4 / 4	4	204			:
Bass	Jazz	3286	MA_AcousticBas1 _ES	4 / 4	4	132			:
Bass	Jazz	3287	MA_AcousticBas2 _ES	4 / 4	4	132			:
Bass	Jazz	3288	MA_AcousticBas3 _ES	4 / 4	4	132			:
Bass	Jazz	3289	MA_AcousticBas4 _ES	4 / 4	8	132			:
Bass	Jazz	3290	MA_AcousticBas5 _ES	4 / 4	4	132			:
Bass	Jazz	3291	MA_Walkin	4 / 4	3	103			:
Bass	Jazz	3292	MA_Slow Blues 2 _XS	4 / 4	4	72			Finger Bass
Bass	Jazz	3293	MB_Slow Blues 2 _XS	4 / 4	4	72			:
Bass	Jazz	3294	MC_Slow Blues 2 _XS	4 / 4	4	72			:
Bass	Jazz	3295	FA_Slow Blues 2 _XS	4 / 4	1	72			:
Bass	Jazz	3296	FB_Slow Blues 2 _XS	4 / 4	1	72			:
Bass	Jazz	3297	FC_Slow Blues 2 _XS	4 / 4	1	72			:
Bass	Jazz	3298	BA_Slow Blues 2 _XS	4 / 4	1	72			:
Bass	Jazz	3299	MA_Slow Blues 2 _ES	4 / 4	4	72			:
Bass	Jazz	3300	MB_Slow Blues 2 _ES	4 / 4	4	72			:
Bass	Jazz	3301	MC_Slow Blues 2 _ES	4 / 4	4	72			:
Bass	Jazz	3302	FA_Slow Blues 2 _ES	4 / 4	1	72			:
Bass	Jazz	3303	FB_Slow Blues 2 _ES	4 / 4	1	72			:
Bass	Jazz	3304	FC_Slow Blues 2 _ES	4 / 4	1	72			:
Bass	Jazz	3305	BA_Slow Blues 2	4 / 4	1	72			:
Bass	Latin	3306	MA_Salsa 2 _ES	4 / 4	4	123			Acoustic Bass
Bass	Latin	3307	MB_Salsa 2 _ES	4 / 4	4	123			:
Bass	Latin	3308	FA_Salsa 2 _ES	4 / 4	1	123			:
Bass	Latin	3309	FC_Salsa 2 _ES	4 / 4	2	123			:
Bass	Latin	3310	MA_Montuno _ES	4 / 4	4	100			Finger Bass
Bass	Latin	3311	MC_Montuno/1 _ES	4 / 4	4	100			:
Bass	Latin	3312	MC_Montuno/2 _ES	4 / 4	4	100			:
Bass	Latin	3313	MD_Montuno/1 _ES	4 / 4	4	100			:
Bass	Latin	3314	MD_Montuno/2 _ES	4 / 4	4	100			:

Main Category	Sub Category	ARP No.	ARP Name	Time Signature	Length	Original Tempo	Accent	Random SFX	Voice Type
Bass	Latin	3315	MD_Montuno /3 _ES	4 / 4	4	100			Finger Bass
Bass	Latin	3316	MD_Montuno /4 _ES	4 / 4	4	100			:
Bass	Latin	3317	FA_Montuno/1 _ES	4 / 4	1	100			:
Bass	Latin	3318	FA_Montuno/2 _ES	4 / 4	1	100			:
Bass	Latin	3319	FC_Montuno _ES	4 / 4	4	100			:
Bass	Latin	3320	MA_Samba _ES	4 / 4	2	120			:
Bass	Latin	3321	MC_Samba _ES	4 / 4	4	120			:
Bass	Latin	3322	MD_Samba _ES	4 / 4	4	120			:
Bass	Latin	3323	IA_Samba _ES	4 / 4	2	120			:
Bass	Latin	3324	MA_FretlessBas1 _ES	4 / 4	4	124			Fretless Bass
Bass	Latin	3325	MA_FretlessBas2 _ES	4 / 4	4	124			:
Bass	Latin	3326	MA_FretlessBas3 _ES	4 / 4	4	124			:
Bass	Latin	3327	MA_FretlessBas4 _ES	4 / 4	4	124			:
Bass	Latin	3328	MA_FretlessBas5 _ES	4 / 4	4	124			:
Bass	Latin	3329	MA_Latin Rock _ES	4 / 4	2	120			Finger Bass
Bass	Latin	3330	MB_Latin Rock _ES	4 / 4	2	120			:
Bass	Latin	3331	MC_Latin Rock _ES	4 / 4	2	120			:
Bass	Latin	3332	MD_Latin Rock _ES	4 / 4	4	120			:
Bass	Latin	3333	IA_Latin Rock _ES	4 / 4	2	120			:
Bass	Latin	3334	FA_Latin Rock _ES	4 / 4	1	120			:
Bass	Latin	3335	FB_Latin Rock _ES	4 / 4	1	120			:
Bass	Latin	3336	MA_Disco Latin _XS	4 / 4	4	100			:
Bass	Latin	3337	MB_Disco Latin _XS	4 / 4	4	100			:
Bass	Latin	3338	MC_Disco Latin _XS	4 / 4	4	100			:
Bass	Latin	3339	FA_Disco Latin _XS	4 / 4	1	100			:
Bass	Latin	3340	FB_Disco Latin _XS	4 / 4	1	100			:
Bass	Latin	3341	FC_Disco Latin _XS	4 / 4	1	100			:
Bass	Latin	3342	BA_Disco Latin _XS	4 / 4	1	100			:
Bass	Latin	3343	MA_Latin House _ES	4 / 4	4	138			:
Bass	Latin	3344	MC_Latin House _ES	4 / 4	4	138			:
Bass	Latin	3345	FA_Latin House _ES	4 / 4	4	138			Synth Bass
Bass	World	3346	MA_Jumbo Reggae _XS	4 / 4	4	100			:
Bass	World	3347	MB_Jumbo Reggae _XS	4 / 4	4	100			:
Bass	World	3348	MC_Jumbo Reggae _XS	4 / 4	4	100			:
Bass	World	3349	FA_Jumbo Reggae _XS	4 / 4	1	100			:
Bass	World	3350	FB_Jumbo Reggae _XS	4 / 4	1	100			:
Bass	World	3351	FC_Jumbo Reggae _XS	4 / 4	1	100			:
Bass	World	3352	BA_Jumbo Reggae _XS	4 / 4	1	100			:
Bass	World	3353	EA_Jumbo Reggae _XS	4 / 4	3	100			:
Bass	World	3354	EB_Jumbo Reggae _XS	4 / 4	3	100			:
Bass	World	3355	MA_Reggae 1	4 / 4	4	102			Finger Bass
Bass	World	3356	MB_Reggae 1	4 / 4	4	102			:
Bass	World	3357	MC_Reggae 1	4 / 4	4	80			:
Bass	World	3358	MD_Reggae 1	4 / 4	4	90			:
Bass	World	3359	IA_Reggae 1	4 / 4	4	102			:
Bass	World	3360	FA_Reggae 1	4 / 4	1	96			:
Bass	World	3361	FB_Reggae 1	4 / 4	1	90			:
Bass	World	3362	FC_Reggae 1	4 / 4	4	96			:
Bass	World	3363	MA_Reggae 2 _ES	4 / 4	2	92			:
Bass	World	3364	MB_Reggae 2 _ES	4 / 4	2	92			:
Bass	World	3365	MC_Reggae 2 _ES	4 / 4	2	92			:
Bass	World	3366	MD_Reggae 2 _ES	4 / 4	2	92			:
Bass	World	3367	IA_Reggae 2 _ES	4 / 4	2	92			:
Bass	World	3368	FA_Reggae 2 _ES	4 / 4	1	92			:
Bass	World	3369	FB_Reggae 2 _ES	4 / 4	1	92			:
Bass	World	3370	MA_Spanish Pop _ES	4 / 4	1	120			:
Bass	World	3371	MB_Spanish Pop _ES	4 / 4	2	120			:
Bass	World	3372	MC_Spanish Pop _ES	4 / 4	1	120			:
Bass	World	3373	MD_Spanish Pop _ES	4 / 4	1	120			:
Bass	World	3374	FA_Spanish Pop _ES	4 / 4	1	120			:
Bass	World	3375	FC_Spanish Pop _ES	4 / 4	2	120			:
Bass	World	3376	MA_Turkish Pop _XS	4 / 4	4	101			Synth Bass
Bass	World	3377	MB_Turkish Pop _XS	4 / 4	4	101			:
Bass	World	3378	MC_Turkish Pop _XS	4 / 4	4	101			:
Bass	World	3379	MD_Turkish Pop _XS	4 / 4	4	101			:
Bass	World	3380	MA_Turkish Pop _ES	4 / 4	4	101			:
Bass	World	3381	MB_Turkish Pop _ES	4 / 4	4	101			:
Bass	World	3382	MC_Turkish Pop _ES	4 / 4	4	101			:
Bass	World	3383	MD_Turkish Pop _ES	4 / 4	4	101			:
Bass	World	3384	MA_TurkishDance _XS	4 / 4	4	130			:
Bass	World	3385	MB_TurkishDance _XS	4 / 4	4	130			:
Bass	World	3386	MC_TurkishDance _XS	4 / 4	4	130			:
Bass	World	3387	MD_TurkishDance _XS	4 / 4	4	130			:
Bass	World	3388	MA_TurkishDance _ES	4 / 4	4	130			:
Bass	World	3389	MB_TurkishDance _ES	4 / 4	4	130			:
Bass	World	3390	MC_TurkishDance _ES	4 / 4	4	130			:
Bass	World	3391	MD_TurkishDance _ES	4 / 4	4	130			:
Bass	World	3392	MA_Turkish _ES	4 / 4	2	105			Finger Bass
Bass	World	3393	MB_Turkish _ES	4 / 4	2	105			:
Bass	World	3394	MC_Turkish _ES	9 / 8	2	125			:
Bass	World	3395	MD_Turkish _ES	9 / 8	2	125			:
Bass	World	3396	ME_Turkish _ES	4 / 4	2	105			:
Bass	World	3397	MF_Turkish _ES	4 / 4	2	105			:

Main Category	Sub Category	ARP No.	ARP Name	Time Signature	Length	Original Tempo	Accent	Random SFX	Voice Type
Bass	World	3398	IA_Turkish _ES	4 / 4	2	86			Finger Bass
Bass	World	3399	MA_TurkishEuro1 _XS	4 / 4	4	112			Synth Bass
Bass	World	3400	MB_TurkishEuro1 _XS	4 / 4	4	112			:
Bass	World	3401	MC_TurkishEuro1 _XS	4 / 4	4	112			:
Bass	World	3402	FA_TurkishEuro1 _XS	4 / 4	1	112			:
Bass	World	3403	FB_TurkishEuro1 _XS	4 / 4	1	112			:
Bass	World	3404	FC_TurkishEuro1 _XS	4 / 4	1	112			:
Bass	World	3405	BA_TurkishEuro1 _XS	4 / 4	1	112			:
Bass	World	3406	EA_TurkishEuro1 _XS	4 / 4	3	112			:
Bass	World	3407	MA_TurkishEuro2 _XS	4 / 4	4	120			:
Bass	World	3408	MB_TurkishEuro2 _XS	4 / 4	4	120			:
Bass	World	3409	MC_TurkishEuro2 _XS	4 / 4	4	120			:
Bass	World	3410	FA_TurkishEuro2 _XS	4 / 4	1	120			:
Bass	World	3411	FB_TurkishEuro2 _XS	4 / 4	1	120			:
Bass	World	3412	FC_TurkishEuro2 _XS	4 / 4	1	120			:
Bass	World	3413	BA_TurkishEuro2 _XS	4 / 4	1	120			:
Bass	World	3414	EA_TurkishEuro2 _XS	4 / 4	3	120			:
BaMG	Rock	3415	MA_StandardRock _XS	4 / 4	4	131		●	"Mega Finger+Slap"
BaMG	Rock	3416	MB_StandardRock _XS	4 / 4	4	131		●	:
BaMG	Rock	3417	MC_StandardRock _XS	4 / 4	4	131		●	:
BaMG	Rock	3418	FA_StandardRock _XS	4 / 4	1	131		●	:
BaMG	Rock	3419	FB_StandardRock _XS	4 / 4	1	131		●	:
BaMG	Rock	3420	FC_StandardRock _XS	4 / 4	1	131		●	:
BaMG	Rock	3421	BA_StandardRock _XS	4 / 4	1	131		●	:
BaMG	Rock	3422	EA_StandardRock _XS	4 / 4	4	131		●	:
BaMG	Rock	3423	EB_StandardRock _XS	4 / 4	6	131		●	:
BaMG	Rock	3424	MA_Power Rock _XS	4 / 4	4	120		●	"Mega Pick Open Mute"
BaMG	Rock	3425	MB_Power Rock _XS	4 / 4	4	120		●	:
BaMG	Rock	3426	MC_Power Rock _XS	4 / 4	4	120		●	:
BaMG	Rock	3427	FA_Power Rock _XS	4 / 4	1	120		●	:
BaMG	Rock	3428	FB_Power Rock _XS	4 / 4	1	120		●	:
BaMG	Rock	3429	FC_Power Rock _XS	4 / 4	1	120		●	:
BaMG	Rock	3430	BA_Power Rock _XS	4 / 4	1	120		●	:
BaMG	Rock	3431	EA_Power Rock _XS	4 / 4	4	120		●	:
BaMG	Rock	3432	EB_Power Rock _XS	4 / 4	7	120		●	:
BaMG	Rock	3433	MA_ContempRock _XS	4 / 4	4	126		●	:
BaMG	Rock	3434	MB_ContempRock _XS	4 / 4	4	126		●	:
BaMG	Rock	3435	MC_ContempRock _XS	4 / 4	4	126		●	:
BaMG	Rock	3436	FA_ContempRock _XS	4 / 4	1	126		●	:
BaMG	Rock	3437	FB_ContempRock _XS	4 / 4	1	126		●	:
BaMG	Rock	3438	FC_ContempRock _XS	4 / 4	1	126		●	:
BaMG	Rock	3439	BA_ContempRock _XS	4 / 4	1	126		●	:
BaMG	Rock	3440	EA_ContempRock _XS	4 / 4	4	126		●	:
BaMG	Rock	3441	EB_ContempRock _XS	4 / 4	4	126		●	:
BaMG	Rock	3442	MA_Hard Rock _XS	4 / 4	4	120		●	"Mega Finger+Slap"
BaMG	Rock	3443	MB_Hard Rock _XS	4 / 4	4	120		●	:
BaMG	Rock	3444	MC_Hard Rock _XS	4 / 4	4	120		●	:
BaMG	Rock	3445	FA_Hard Rock _XS	4 / 4	1	120		●	:
BaMG	Rock	3446	FB_Hard Rock _XS	4 / 4	1	120		●	:
BaMG	Rock	3447	FC_Hard Rock _XS	4 / 4	1	120		●	:
BaMG	Rock	3448	BA_Hard Rock _XS	4 / 4	1	120		●	:
BaMG	Rock	3449	EA_Hard Rock _XS	4 / 4	3	120		●	:
BaMG	Rock	3450	EB_Hard Rock _XS	4 / 4	6	120		●	:
BaMG	Rock	3451	MA_Blues Rock _XS	4 / 4	4	120		●	:
BaMG	Rock	3452	MB_Blues Rock _XS	4 / 4	4	120		●	:
BaMG	Rock	3453	MC_Blues Rock _XS	4 / 4	4	120		●	:
BaMG	Rock	3454	FA_Blues Rock _XS	4 / 4	1	120		●	:
BaMG	Rock	3455	FB_Blues Rock _XS	4 / 4	1	120		●	:
BaMG	Rock	3456	FC_Blues Rock _XS	4 / 4	1	120		●	:
BaMG	Rock	3457	BA_Blues Rock _XS	4 / 4	1	120		●	:
BaMG	Rock	3458	EA_Blues Rock _XS	4 / 4	3	120		●	:
BaMG	Rock	3459	EB_Blues Rock _XS	4 / 4	5	120		●	:
BaMG	Rock	3460	MA_RockShuffle _XS	4 / 4	4	121		●	"Mega Pick Open Mute"
BaMG	Rock	3461	MB_RockShuffle _XS	4 / 4	4	121		●	:
BaMG	Rock	3462	MC_RockShuffle _XS	4 / 4	4	121		●	:
BaMG	Rock	3463	FA_RockShuffle _XS	4 / 4	1	121		●	:
BaMG	Rock	3464	FB_RockShuffle _XS	4 / 4	1	121		●	:
BaMG	Rock	3465	FC_RockShuffle _XS	4 / 4	1	121		●	:
BaMG	Rock	3466	BA_RockShuffle _XS	4 / 4	1	121		●	:
BaMG	Rock	3467	EA_RockShuffle _XS	4 / 4	6	121		●	:
BaMG	Rock	3468	MA_Rock & Roll _XS	4 / 4	4	172		●	:
BaMG	Rock	3469	MB_Rock & Roll _XS	4 / 4	4	172		●	:
BaMG	Rock	3470	MC_Rock & Roll _XS	4 / 4	4	172		●	:
BaMG	Rock	3471	FA_Rock & Roll _XS	4 / 4	1	172		●	:
BaMG	Rock	3472	FB_Rock & Roll _XS	4 / 4	1	172		●	:
BaMG	Rock	3473	FC_Rock & Roll _XS	4 / 4	1	172		●	:
BaMG	Rock	3474	BA_Rock & Roll _XS	4 / 4	1	172		●	:
BaMG	Rock	3475	EA_Rock & Roll _XS	4 / 4	5	172		●	:
BaMG	Rock	3476	EB_Rock & Roll _XS	4 / 4	6	172		●	:
BaMG	Rock	3477	MC_MapleCstmBass _XS	4 / 4	4	150		●	"Mega Finger+Slap"
BaMG	Rock	3478	MD_MapleCstmBass _XS	4 / 4	4	150		●	:
BaMG	Rock	3479	EA_MapleCstmBass _XS	4 / 4	7	150		●	:
BaMG	PopRk	3480	MA_Guitar Pop 1 _XS	4 / 4	4	100		●	:

Main Category	Sub Category	ARP No.	ARP Name	Time Signature	Length	Original Tempo	Accent	Random SFX	Voice Type
BaMG	PopRk	3481	MB_Guitar Pop 1 _XS	4 / 4	4	100		●	"Mega Finger+Slap"
BaMG	PopRk	3482	MC_Guitar Pop 1 _XS	4 / 4	4	100		●	:
BaMG	PopRk	3483	FA_Guitar Pop 1 _XS	4 / 4	1	100		●	:
BaMG	PopRk	3484	FB_Guitar Pop 1 _XS	4 / 4	1	100		●	:
BaMG	PopRk	3485	FC_Guitar Pop 1 _XS	4 / 4	1	100		●	:
BaMG	PopRk	3486	BA_Guitar Pop 1 _XS	4 / 4	1	100		●	:
BaMG	PopRk	3487	EA_Guitar Pop 1 _XS	4 / 4	3	100		●	:
BaMG	PopRk	3488	EB_Guitar Pop 1 _XS	4 / 4	3	100		●	:
BaMG	PopRk	3489	MA_Acoustic Pop _XS	4 / 4	4	110		●	:
BaMG	PopRk	3490	MB_Acoustic Pop _XS	4 / 4	4	110		●	:
BaMG	PopRk	3491	MC_Acoustic Pop _XS	4 / 4	4	110		●	:
BaMG	PopRk	3492	FA_Acoustic Pop _XS	4 / 4	1	110		●	:
BaMG	PopRk	3493	FB_Acoustic Pop _XS	4 / 4	1	110		●	:
BaMG	PopRk	3494	FC_Acoustic Pop _XS	4 / 4	1	110		●	:
BaMG	PopRk	3495	MA_Worship Slow _XS	4 / 4	4	75		●	:
BaMG	PopRk	3496	MB_Worship Slow _XS	4 / 4	4	75		●	:
BaMG	PopRk	3497	MC_Worship Slow _XS	4 / 4	4	75		●	:
BaMG	PopRk	3498	FA_Worship Slow _XS	4 / 4	1	75		●	:
BaMG	PopRk	3499	FB_Worship Slow _XS	4 / 4	1	75		●	:
BaMG	PopRk	3500	FC_Worship Slow _XS	4 / 4	1	75		●	:
BaMG	PopRk	3501	BA_Worship Slow _XS	4 / 4	1	75		●	:
BaMG	PopRk	3502	EA_Worship Slow _XS	4 / 4	4	75		●	:
BaMG	PopRk	3503	EB_Worship Slow _XS	4 / 4	4	75		●	:
BaMG	PopRk	3504	MA_Worship Med _XS	4 / 4	8	140		●	"Mega Acoustic Bass"
BaMG	PopRk	3505	MB_Worship Med _XS	4 / 4	4	140		●	:
BaMG	PopRk	3506	MC_Worship Med _XS	4 / 4	4	140		●	:
BaMG	PopRk	3507	FA_Worship Med _XS	4 / 4	1	140		●	:
BaMG	PopRk	3508	FB_Worship Med _XS	4 / 4	1	140		●	:
BaMG	PopRk	3509	FC_Worship Med _XS	4 / 4	1	140		●	:
BaMG	PopRk	3510	BA_Worship Med _XS	4 / 4	1	140		●	:
BaMG	PopRk	3511	EA_Worship Med _XS	4 / 4	4	140		●	:
BaMG	PopRk	3512	EB_Worship Med _XS	4 / 4	4	140		●	:
BaMG	PopRk	3513	MA_Worship Fast _XS	4 / 4	8	114		●	"Mega Finger+Slap"
BaMG	PopRk	3514	MB_Worship Fast _XS	4 / 4	4	114		●	:
BaMG	PopRk	3515	MC_Worship Fast _XS	4 / 4	4	114		●	:
BaMG	PopRk	3516	FA_Worship Fast _XS	4 / 4	1	114		●	:
BaMG	PopRk	3517	FB_Worship Fast _XS	4 / 4	1	114		●	:
BaMG	PopRk	3518	FC_Worship Fast _XS	4 / 4	1	114		●	:
BaMG	PopRk	3519	BA_Worship Fast _XS	4 / 4	1	114		●	:
BaMG	PopRk	3520	EA_Worship Fast _XS	4 / 4	4	114		●	:
BaMG	PopRk	3521	EB_Worship Fast _XS	4 / 4	2	114		●	:
BaMG	PopRk	3522	MA_New Country _XS	4 / 4	2	118		●	:
BaMG	PopRk	3523	MB_New Country _XS	4 / 4	4	118		●	:
BaMG	PopRk	3524	MC_New Country _XS	4 / 4	2	118		●	:
BaMG	PopRk	3525	FA_New Country _XS	4 / 4	1	118		●	:
BaMG	PopRk	3526	FB_New Country _XS	4 / 4	1	118		●	:
BaMG	PopRk	3527	FC_New Country _XS	4 / 4	1	118		●	:
BaMG	PopRk	3528	BA_New Country _XS	4 / 4	1	118		●	:
BaMG	PopRk	3529	EA_New Country _XS	4 / 4	4	118		●	:
BaMG	PopRk	3530	EB_New Country _XS	4 / 4	4	118		●	:
BaMG	PopRk	3531	MA_VintageGtPop _XS	4 / 4	4	148		●	:
BaMG	PopRk	3532	MB_VintageGtPop _XS	4 / 4	4	148		●	:
BaMG	PopRk	3533	MC_VintageGtPop _XS	4 / 4	4	148		●	:
BaMG	PopRk	3534	FA_VintageGtPop _XS	4 / 4	1	148		●	:
BaMG	PopRk	3535	FB_VintageGtPop _XS	4 / 4	1	148		●	:
BaMG	PopRk	3536	FC_VintageGtPop _XS	4 / 4	1	148		●	:
BaMG	PopRk	3537	BA_VintageGtPop _XS	4 / 4	1	148		●	:
BaMG	PopRk	3538	EA_VintageGtPop _XS	4 / 4	4	148		●	:
BaMG	PopRk	3539	EB_VintageGtPop _XS	4 / 4	4	148		●	:
BaMG	PopRk	3540	MA_WestCoastPop _XS	4 / 4	4	100		●	:
BaMG	PopRk	3541	MB_WestCoastPop _XS	4 / 4	4	100		●	:
BaMG	PopRk	3542	MC_WestCoastPop _XS	4 / 4	4	100		●	:
BaMG	PopRk	3543	FA_WestCoastPop _XS	4 / 4	1	100		●	:
BaMG	PopRk	3544	FB_WestCoastPop _XS	4 / 4	1	100		●	:
BaMG	PopRk	3545	FC_WestCoastPop _XS	4 / 4	1	100		●	:
BaMG	PopRk	3546	BA_WestCoastPop _XS	4 / 4	1	100		●	:
BaMG	PopRk	3547	EA_WestCoastPop _XS	4 / 4	4	100		●	:
BaMG	PopRk	3548	EB_WestCoastPop _XS	4 / 4	4	100		●	:
BaMG	PopRk	3549	MA_Brit Pop _XS	4 / 4	2	86		●	:
BaMG	PopRk	3550	MB_Brit Pop _XS	4 / 4	2	86		●	:
BaMG	PopRk	3551	MC_Brit Pop _XS	4 / 4	2	86		●	:
BaMG	PopRk	3552	FA_Brit Pop _XS	4 / 4	1	86		●	:
BaMG	PopRk	3553	FB_Brit Pop _XS	4 / 4	1	86		●	:
BaMG	PopRk	3554	FC_Brit Pop _XS	4 / 4	1	86		●	:
BaMG	PopRk	3555	BA_Brit Pop _XS	4 / 4	1	86		●	:
BaMG	PopRk	3556	EA_Brit Pop _XS	4 / 4	4	86		●	:
BaMG	PopRk	3557	EB_Brit Pop _XS	4 / 4	4	86		●	:
BaMG	PopRk	3558	MA_BritPopSwing _XS	4 / 4	2	110		●	:
BaMG	PopRk	3559	MB_BritPopSwing _XS	4 / 4	2	110		●	:
BaMG	PopRk	3560	MC_BritPopSwing _XS	4 / 4	2	110		●	:
BaMG	PopRk	3561	FA_BritPopSwing _XS	4 / 4	1	110		●	:
BaMG	PopRk	3562	FB_BritPopSwing _XS	4 / 4	1	110		●	:
BaMG	PopRk	3563	FC_BritPopSwing _XS	4 / 4	1	110		●	:

Main Category	Sub Category	ARP No.	ARP Name	Time Signature	Length	Original Tempo	Accent	Random SFX	Voice Type
BaMG	PopRk	3564	BA_BritPopSwing _XS	4 / 4	1	110		●	"Mega Finger+Slap"
BaMG	PopRk	3565	EA_BritPopSwing _XS	4 / 4	4	110		●	:
BaMG	PopRk	3566	EB_BritPopSwing _XS	4 / 4	4	110		●	:
BaMG	PopRk	3567	MA_Cool 8Beat _XS	4 / 4	2	100		●	:
BaMG	PopRk	3568	MB_Cool 8Beat _XS	4 / 4	2	100		●	:
BaMG	PopRk	3569	MC_Cool 8Beat _XS	4 / 4	2	100		●	:
BaMG	PopRk	3570	FA_Cool 8Beat _XS	4 / 4	1	100		●	:
BaMG	PopRk	3571	FB_Cool 8Beat _XS	4 / 4	1	100		●	:
BaMG	PopRk	3572	FC_Cool 8Beat _XS	4 / 4	1	100		●	:
BaMG	PopRk	3573	BA_Cool 8Beat _XS	4 / 4	1	100		●	:
BaMG	PopRk	3574	EA_Cool 8Beat _XS	4 / 4	4	100		●	:
BaMG	PopRk	3575	EB_Cool 8Beat _XS	4 / 4	4	100		●	:
BaMG	PopRk	3576	MA_BritRockPop _XS	4 / 4	4	123		●	:
BaMG	PopRk	3577	MB_BritRockPop _XS	4 / 4	4	123		●	:
BaMG	PopRk	3578	MC_BritRockPop _XS	4 / 4	4	123		●	:
BaMG	PopRk	3579	FA_BritRockPop _XS	4 / 4	1	123		●	:
BaMG	PopRk	3580	FB_BritRockPop _XS	4 / 4	1	123		●	:
BaMG	PopRk	3581	FC_BritRockPop _XS	4 / 4	1	123		●	:
BaMG	PopRk	3582	BA_BritRockPop _XS	4 / 4	1	123		●	:
BaMG	PopRk	3583	EA_BritRockPop _XS	4 / 4	6	123		●	:
BaMG	PopRk	3584	MA_80'sPopRock _XS	4 / 4	4	111		●	"Mega Pick Open Mute"
BaMG	PopRk	3585	MB_80'sPopRock _XS	4 / 4	4	111		●	:
BaMG	PopRk	3586	MC_80'sPopRock _XS	4 / 4	4	111		●	:
BaMG	PopRk	3587	FA_80'sPopRock _XS	4 / 4	1	111		●	:
BaMG	PopRk	3588	FB_80'sPopRock _XS	4 / 4	1	111		●	:
BaMG	PopRk	3589	FC_80'sPopRock _XS	4 / 4	1	111		●	:
BaMG	PopRk	3590	BA_80'sPopRock _XS	4 / 4	1	111		●	:
BaMG	PopRk	3591	EA_80'sPopRock _XS	4 / 4	7	111		●	:
BaMG	PopRk	3592	MA_80'sSynthRock _XS	4 / 4	4	96		●	"Mega Finger+Harmonic"
BaMG	PopRk	3593	MB_80'sSynthRock _XS	4 / 4	4	96		●	:
BaMG	PopRk	3594	MC_80'sSynthRock _XS	4 / 4	8	96		●	:
BaMG	PopRk	3595	FA_80'sSynthRock _XS	4 / 4	1	96		●	:
BaMG	PopRk	3596	FB_80'sSynthRock _XS	4 / 4	1	96		●	:
BaMG	PopRk	3597	FC_80'sSynthRock _XS	4 / 4	1	96		●	:
BaMG	PopRk	3598	BA_80'sSynthRock _XS	4 / 4	1	96		●	:
BaMG	PopRk	3599	EA_80'sSynthRock _XS	4 / 4	3	96		●	:
BaMG	PopRk	3600	MA_60sVintagePop _XS	4 / 4	4	132		●	"Mega Acoustic Bass"
BaMG	PopRk	3601	MB_60sVintagePop _XS	4 / 4	4	132		●	:
BaMG	PopRk	3602	MC_60sVintagePop _XS	4 / 4	4	132		●	:
BaMG	PopRk	3603	FA_60sVintagePop _XS	4 / 4	1	132		●	:
BaMG	PopRk	3604	FB_60sVintagePop _XS	4 / 4	1	132		●	:
BaMG	PopRk	3605	FC_60sVintagePop _XS	4 / 4	1	132		●	:
BaMG	PopRk	3606	BA_60sVintagePop _XS	4 / 4	1	132		●	:
BaMG	PopRk	3607	EA_60sVintagePop _XS	4 / 4	2	132		●	:
BaMG	PopRk	3608	MA_60sChartSwing _XS	4 / 4	4	123		●	"Mega Finger+Harmonic"
BaMG	PopRk	3609	MB_60sChartSwing _XS	4 / 4	4	123		●	:
BaMG	PopRk	3610	MC_60sChartSwing _XS	4 / 4	4	123		●	:
BaMG	PopRk	3611	FA_60sChartSwing _XS	4 / 4	1	123		●	:
BaMG	PopRk	3612	FB_60sChartSwing _XS	4 / 4	1	123		●	:
BaMG	PopRk	3613	FC_60sChartSwing _XS	4 / 4	1	123		●	:
BaMG	PopRk	3614	BA_60sChartSwing _XS	4 / 4	1	123		●	:
BaMG	PopRk	3615	EA_60sChartSwing _XS	4 / 4	4	123		●	:
BaMG	PopRk	3616	MA_16Beat Pop 1 _XS	4 / 4	4	103		●	"Mega Slap Bass"
BaMG	PopRk	3617	MB_16Beat Pop 1 _XS	4 / 4	4	103		●	:
BaMG	PopRk	3618	MC_16Beat Pop 1 _XS	4 / 4	4	103		●	:
BaMG	PopRk	3619	FA_16Beat Pop 1 _XS	4 / 4	1	103		●	:
BaMG	PopRk	3620	FB_16Beat Pop 1 _XS	4 / 4	1	103		●	:
BaMG	PopRk	3621	FC_16Beat Pop 1 _XS	4 / 4	1	103		●	:
BaMG	PopRk	3622	BA_16Beat Pop 1 _XS	4 / 4	1	103		●	:
BaMG	PopRk	3623	MA_16Beat Pop 1 _ES	4 / 4	4	103		●	:
BaMG	PopRk	3624	MB_16Beat Pop 1 _ES	4 / 4	4	103		●	:
BaMG	PopRk	3625	MC_16Beat Pop 1 _ES	4 / 4	4	103		●	:
BaMG	PopRk	3626	FA_16Beat Pop 1 _ES	4 / 4	1	103		●	:
BaMG	PopRk	3627	FB_16Beat Pop 1 _ES	4 / 4	1	103		●	:
BaMG	PopRk	3628	FC_16Beat Pop 1 _ES	4 / 4	1	103		●	:
BaMG	PopRk	3629	BA_16Beat Pop 1 _ES	4 / 4	1	103		●	:
BaMG	Balad	3630	MA_GuitarBallad _XS	4 / 4	8	94		●	"Mega Finger+Slap"
BaMG	Balad	3631	MB_GuitarBallad _XS	4 / 4	8	94		●	:
BaMG	Balad	3632	MC_GuitarBallad _XS	4 / 4	8	94		●	:
BaMG	Balad	3633	FA_GuitarBallad _XS	4 / 4	1	94		●	:
BaMG	Balad	3634	FB_GuitarBallad _XS	4 / 4	1	94		●	:
BaMG	Balad	3635	FC_GuitarBallad _XS	4 / 4	1	94		●	:
BaMG	Balad	3636	BA_GuitarBallad _XS	4 / 4	1	94		●	:
BaMG	Balad	3637	EA_GuitarBallad _XS	4 / 4	4	94		●	:
BaMG	Balad	3638	EB_GuitarBallad _XS	4 / 4	4	94		●	:
BaMG	Balad	3639	MA_Unplugged 1 _XS	4 / 4	4	120		●	"Mega Acoustic Bass"
BaMG	Balad	3640	MB_Unplugged 1 _XS	4 / 4	4	120		●	:
BaMG	Balad	3641	MC_Unplugged 1 _XS	4 / 4	4	120		●	:
BaMG	Balad	3642	FA_Unplugged 1 _XS	4 / 4	1	120		●	:
BaMG	Balad	3643	FB_Unplugged 1 _XS	4 / 4	1	120		●	:
BaMG	Balad	3644	FC_Unplugged 1 _XS	4 / 4	1	120		●	:
BaMG	Balad	3645	BA_Unplugged 1 _XS	4 / 4	1	120		●	:
BaMG	Balad	3646	MA_Unplugged 2 _XS	4 / 4	8	120		●	"Mega Finger+Slap"

Main Category	Sub Category	ARP No.	ARP Name	Time Signature	Length	Original Tempo	Accent	Random SFX	Voice Type
BaMG	Balad	3647	MB_Unplugged 2 _XS	4 / 4	8	120		●	"Mega Finger+Slap"
BaMG	Balad	3648	MC_Unplugged 2 _XS	4 / 4	8	120		●	:
BaMG	Balad	3649	FA_Unplugged 2 _XS	4 / 4	1	120		●	:
BaMG	Balad	3650	FB_Unplugged 2 _XS	4 / 4	1	120		●	:
BaMG	Balad	3651	FC_Unplugged 2 _XS	4 / 4	1	120		●	:
BaMG	Balad	3652	BA_Unplugged 2 _XS	4 / 4	1	120		●	:
BaMG	Balad	3653	EA_Unplugged 2 _XS	4 / 4	5	120		●	:
BaMG	Balad	3654	EB_Unplugged 2 _XS	4 / 4	4	120		●	:
BaMG	Balad	3655	MA_8Beat Ballad _XS	4 / 4	4	101		●	:
BaMG	Balad	3656	MB_8Beat Ballad _XS	4 / 4	4	101		●	:
BaMG	Balad	3657	MC_8Beat Ballad _XS	4 / 4	4	101		●	:
BaMG	Balad	3658	FA_8Beat Ballad _XS	4 / 4	1	101		●	:
BaMG	Balad	3659	FB_8Beat Ballad _XS	4 / 4	1	101		●	:
BaMG	Balad	3660	FC_8Beat Ballad _XS	4 / 4	1	101		●	:
BaMG	Balad	3661	BA_8Beat Ballad _XS	4 / 4	1	101		●	:
BaMG	Balad	3662	EA_8Beat Ballad _XS	4 / 4	5	101		●	:
BaMG	Balad	3663	EB_8Beat Ballad _XS	4 / 4	5	101		●	:
BaMG	Balad	3664	MA_EP Ballad _XS	4 / 4	2	60		●	:
BaMG	Balad	3665	MB_EP Ballad _XS	4 / 4	2	60		●	:
BaMG	Balad	3666	MC_EP Ballad _XS	4 / 4	2	60		●	:
BaMG	Balad	3667	FA_EP Ballad _XS	4 / 4	1	60		●	:
BaMG	Balad	3668	FB_EP Ballad _XS	4 / 4	1	60		●	:
BaMG	Balad	3669	FC_EP Ballad _XS	4 / 4	1	60		●	:
BaMG	Balad	3670	BA_EP Ballad _XS	4 / 4	1	60		●	:
BaMG	Balad	3671	EA_EP Ballad _XS	4 / 4	4	60		●	:
BaMG	Balad	3672	EB_EP Ballad _XS	4 / 4	4	60		●	:
BaMG	Balad	3673	EA_Nu Jazzy Bass _XS	4 / 4	4	61		●	:
BaMG	R&B-M	3674	MA_Slow & Easy _XS	4 / 4	4	72		●	:
BaMG	R&B-M	3675	MB_Slow & Easy _XS	4 / 4	4	72		●	:
BaMG	R&B-M	3676	MC_Slow & Easy _XS	4 / 4	4	72		●	:
BaMG	R&B-M	3677	FA_Slow & Easy _XS	4 / 4	1	72		●	:
BaMG	R&B-M	3678	FB_Slow & Easy _XS	4 / 4	1	72		●	:
BaMG	R&B-M	3679	FC_Slow & Easy _XS	4 / 4	1	72		●	:
BaMG	R&B-M	3680	BA_Slow & Easy _XS	4 / 4	1	72		●	:
BaMG	R&B-M	3681	EA_Slow & Easy _XS	4 / 4	3	72		●	:
BaMG	R&B-M	3682	EB_Slow & Easy _XS	4 / 4	4	72		●	:
BaMG	R&B-C	3683	MA_StandrdDisco _XS	4 / 4	4	120		●	:
BaMG	R&B-C	3684	MB_StandrdDisco _XS	4 / 4	4	120		●	:
BaMG	R&B-C	3685	MC_StandrdDisco _XS	4 / 4	4	120		●	:
BaMG	R&B-C	3686	FA_StandrdDisco _XS	4 / 4	1	120		●	:
BaMG	R&B-C	3687	FB_StandrdDisco _XS	4 / 4	1	120		●	:
BaMG	R&B-C	3688	FC_StandrdDisco _XS	4 / 4	1	120		●	:
BaMG	R&B-C	3689	BA_StandrdDisco _XS	4 / 4	1	120		●	:
BaMG	R&B-C	3690	EA_StandrdDisco _XS	4 / 4	3	120		●	:
BaMG	R&B-C	3691	EB_StandrdDisco _XS	4 / 4	3	120		●	:
BaMG	R&B-C	3692	MA_Retro Disco _XS	4 / 4	4	108		●	:
BaMG	R&B-C	3693	MB_Retro Disco _XS	4 / 4	4	108		●	:
BaMG	R&B-C	3694	MC_Retro Disco _XS	4 / 4	4	108		●	:
BaMG	R&B-C	3695	FA_Retro Disco _XS	4 / 4	1	108		●	:
BaMG	R&B-C	3696	FB_Retro Disco _XS	4 / 4	1	108		●	:
BaMG	R&B-C	3697	FC_Retro Disco _XS	4 / 4	1	108		●	:
BaMG	R&B-C	3698	BA_Retro Disco _XS	4 / 4	1	108		●	:
BaMG	R&B-C	3699	EA_Retro Disco _XS	4 / 4	4	108		●	:
BaMG	R&B-C	3700	EB_Retro Disco _XS	4 / 4	4	108		●	:
BaMG	R&B-C	3701	MA_70sCoolDisco _XS	4 / 4	4	114		●	:
BaMG	R&B-C	3702	MB_70sCoolDisco _XS	4 / 4	4	114		●	:
BaMG	R&B-C	3703	MC_70sCoolDisco _XS	4 / 4	4	114		●	:
BaMG	R&B-C	3704	FA_70sCoolDisco _XS	4 / 4	1	114		●	:
BaMG	R&B-C	3705	FB_70sCoolDisco _XS	4 / 4	1	114		●	:
BaMG	R&B-C	3706	FC_70sCoolDisco _XS	4 / 4	1	114		●	:
BaMG	R&B-C	3707	BA_70sCoolDisco _XS	4 / 4	1	114		●	:
BaMG	R&B-C	3708	EA_70sCoolDisco _XS	4 / 4	4	114		●	:
BaMG	R&B-C	3709	EB_70sCoolDisco _XS	4 / 4	3	114		●	:
BaMG	R&B-C	3710	MA_Philadelphia _XS	4 / 4	2	100		●	:
BaMG	R&B-C	3711	MB_Philadelphia _XS	4 / 4	2	100		●	:
BaMG	R&B-C	3712	MC_Philadelphia _XS	4 / 4	2	100		●	:
BaMG	R&B-C	3713	FA_Philadelphia _XS	4 / 4	1	100		●	:
BaMG	R&B-C	3714	FB_Philadelphia _XS	4 / 4	1	100		●	:
BaMG	R&B-C	3715	FC_Philadelphia _XS	4 / 4	1	100		●	:
BaMG	R&B-C	3716	BA_Philadelphia _XS	4 / 4	1	100		●	:
BaMG	R&B-C	3717	EA_Philadelphia _XS	4 / 4	4	100		●	:
BaMG	R&B-C	3718	EB_Philadelphia _XS	4 / 4	3	100		●	:
BaMG	R&B-C	3719	MA_Soul 1 _XS	4 / 4	2	116		●	:
BaMG	R&B-C	3720	MB_Soul 1 _XS	4 / 4	2	116		●	:
BaMG	R&B-C	3721	MC_Soul 1 _XS	4 / 4	2	116		●	:
BaMG	R&B-C	3722	FA_Soul 1 _XS	4 / 4	1	116		●	:
BaMG	R&B-C	3723	FB_Soul 1 _XS	4 / 4	1	116		●	:
BaMG	R&B-C	3724	FC_Soul 1 _XS	4 / 4	1	116		●	:
BaMG	R&B-C	3725	BA_Soul 1 _XS	4 / 4	1	116		●	:
BaMG	R&B-C	3726	EA_Soul 1 _XS	4 / 4	4	116		●	:
BaMG	R&B-C	3727	EB_Soul 1 _XS	4 / 4	3	116		●	:
BaMG	R&B-C	3728	MA_70sChartSoul _XS	4 / 4	2	108		●	:
BaMG	R&B-C	3729	MB_70sChartSoul _XS	4 / 4	2	108		●	:

Main Category	Sub Category	ARP No.	ARP Name	Time Signature	Length	Original Tempo	Accent	Random SFX	Voice Type
BaMG	R&B-C	3730	MC_70sChartSoul _XS	4 / 4	2	108		●	"Mega Finger+Slap"
BaMG	R&B-C	3731	FA_70sChartSoul _XS	4 / 4	1	108		●	:
BaMG	R&B-C	3732	FB_70sChartSoul _XS	4 / 4	1	108		●	:
BaMG	R&B-C	3733	FC_70sChartSoul _XS	4 / 4	1	108		●	:
BaMG	R&B-C	3734	BA_70sChartSoul _XS	4 / 4	1	108		●	:
BaMG	R&B-C	3735	EA_70sChartSoul _XS	4 / 4	5	108		●	:
BaMG	R&B-C	3736	EB_70sChartSoul _XS	4 / 4	3	108		●	:
BaMG	R&B-C	3737	MA_Frankly Soul _XS	4 / 4	4	120		●	:
BaMG	R&B-C	3738	MB_Frankly Soul _XS	4 / 4	4	120		●	:
BaMG	R&B-C	3739	MC_Frankly Soul _XS	4 / 4	4	120		●	:
BaMG	R&B-C	3740	FA_Frankly Soul _XS	4 / 4	1	120		●	:
BaMG	R&B-C	3741	FB_Frankly Soul _XS	4 / 4	1	120		●	:
BaMG	R&B-C	3742	FC_Frankly Soul _XS	4 / 4	1	120		●	:
BaMG	R&B-C	3743	BA_Frankly Soul _XS	4 / 4	1	120		●	:
BaMG	R&B-C	3744	EA_Frankly Soul _XS	4 / 4	3	120		●	:
BaMG	R&B-C	3745	EB_Frankly Soul _XS	4 / 4	4	120		●	:
BaMG	R&B-C	3746	MA_Soul Band _XS	4 / 4	4	129		●	:
BaMG	R&B-C	3747	MB_Soul Band _XS	4 / 4	4	129		●	:
BaMG	R&B-C	3748	MC_Soul Band _XS	4 / 4	4	129		●	:
BaMG	R&B-C	3749	FA_Soul Band _XS	4 / 4	1	129		●	:
BaMG	R&B-C	3750	FB_Soul Band _XS	4 / 4	1	129		●	:
BaMG	R&B-C	3751	FC_Soul Band _XS	4 / 4	1	129		●	:
BaMG	R&B-C	3752	BA_Soul Band _XS	4 / 4	1	129		●	:
BaMG	R&B-C	3753	MA_Soul Shuffle _XS	4 / 4	4	98		●	:
BaMG	R&B-C	3754	MB_Soul Shuffle _XS	4 / 4	4	98		●	:
BaMG	R&B-C	3755	MC_Soul Shuffle _XS	4 / 4	4	98		●	:
BaMG	R&B-C	3756	FA_Soul Shuffle _XS	4 / 4	1	98		●	:
BaMG	R&B-C	3757	FB_Soul Shuffle _XS	4 / 4	1	98		●	:
BaMG	R&B-C	3758	FC_Soul Shuffle _XS	4 / 4	1	98		●	:
BaMG	R&B-C	3759	BA_Soul Shuffle _XS	4 / 4	1	98		●	:
BaMG	R&B-C	3760	EA_Soul Shuffle _XS	4 / 4	3	98		●	:
BaMG	R&B-C	3761	EB_Soul Shuffle _XS	4 / 4	3	98		●	:
BaMG	R&B-C	3762	MA_Soul Swing _XS	4 / 4	4	124		●	:
BaMG	R&B-C	3763	MB_Soul Swing _XS	4 / 4	4	124		●	:
BaMG	R&B-C	3764	MC_Soul Swing _XS	4 / 4	4	124		●	:
BaMG	R&B-C	3765	FA_Soul Swing _XS	4 / 4	1	124		●	:
BaMG	R&B-C	3766	FB_Soul Swing _XS	4 / 4	1	124		●	:
BaMG	R&B-C	3767	FC_Soul Swing _XS	4 / 4	1	124		●	:
BaMG	R&B-C	3768	BA_Soul Swing _XS	4 / 4	1	124		●	:
BaMG	R&B-C	3769	EA_Soul Swing _XS	4 / 4	3	123		●	:
BaMG	R&B-C	3770	EB_Soul Swing _XS	4 / 4	5	123		●	:
BaMG	R&B-C	3771	MA_GospelBrothr _XS	4 / 4	4	108		●	:
BaMG	R&B-C	3772	MB_GospelBrothr _XS	4 / 4	4	108		●	:
BaMG	R&B-C	3773	MC_GospelBrothr _XS	4 / 4	4	108		●	:
BaMG	R&B-C	3774	FA_GospelBrothr _XS	4 / 4	1	108		●	:
BaMG	R&B-C	3775	FB_GospelBrothr _XS	4 / 4	1	108		●	:
BaMG	R&B-C	3776	FC_GospelBrothr _XS	4 / 4	1	108		●	:
BaMG	R&B-C	3777	BA_GospelBrothr _XS	4 / 4	1	108		●	:
BaMG	R&B-C	3778	EA_GospelBrothr _XS	4 / 4	4	108		●	:
BaMG	R&B-C	3779	EB_GospelBrothr _XS	4 / 4	3	108		●	:
BaMG	Funk	3780	MA_Funk 1 _XS	4 / 4	8	104		●	:
BaMG	Funk	3781	MB_Funk 1 _XS	4 / 4	8	104		●	:
BaMG	Funk	3782	MC_Funk 1 _XS	4 / 4	8	104		●	:
BaMG	Funk	3783	FA_Funk 1 _XS	4 / 4	1	104		●	:
BaMG	Funk	3784	FB_Funk 1 _XS	4 / 4	1	104		●	:
BaMG	Funk	3785	FC_Funk 1 _XS	4 / 4	1	104		●	:
BaMG	Funk	3786	BA_Funk 1 _XS	4 / 4	1	104		●	:
BaMG	Funk	3787	EA_Funk 1 _XS	4 / 4	9	104		●	:
BaMG	Funk	3788	EB_Funk 1 _XS	4 / 4	4	104		●	:
BaMG	Funk	3789	MA_Funk PopRock _XS	4 / 4	4	95		●	:
BaMG	Funk	3790	MB_Funk PopRock _XS	4 / 4	4	95		●	:
BaMG	Funk	3791	MC_Funk PopRock _XS	4 / 4	4	95		●	:
BaMG	Funk	3792	FA_Funk PopRock _XS	4 / 4	1	95		●	:
BaMG	Funk	3793	FB_Funk PopRock _XS	4 / 4	1	95		●	:
BaMG	Funk	3794	FC_Funk PopRock _XS	4 / 4	1	95		●	:
BaMG	Funk	3795	BA_Funk PopRock _XS	4 / 4	1	95		●	:
BaMG	Funk	3796	EA_Funk PopRock _XS	4 / 4	4	94		●	:
BaMG	Funk	3797	EB_Funk PopRock _XS	4 / 4	3	94		●	:
BaMG	Funk	3798	MA_Jazz Funk 1 _XS	4 / 4	4	120		●	:
BaMG	Funk	3799	MB_Jazz Funk 1 _XS	4 / 4	4	120		●	:
BaMG	Funk	3800	MC_Jazz Funk 1 _XS	4 / 4	4	120		●	:
BaMG	Funk	3801	FA_Jazz Funk 1 _XS	4 / 4	1	120		●	:
BaMG	Funk	3802	FB_Jazz Funk 1 _XS	4 / 4	1	120		●	:
BaMG	Funk	3803	FC_Jazz Funk 1 _XS	4 / 4	1	120		●	:
BaMG	Funk	3804	BA_Jazz Funk 1 _XS	4 / 4	1	120		●	:
BaMG	Funk	3805	EA_Jazz Funk 1 _XS	4 / 4	3	120		●	:
BaMG	Funk	3806	EB_Jazz Funk 1 _XS	4 / 4	3	120		●	:
BaMG	Funk	3807	MA_Jazz Pop _XS	4 / 4	2	102		●	:
BaMG	Funk	3808	MB_Jazz Pop _XS	4 / 4	2	102		●	:
BaMG	Funk	3809	MC_Jazz Pop _XS	4 / 4	2	102		●	:
BaMG	Funk	3810	FA_Jazz Pop _XS	4 / 4	1	102		●	:
BaMG	Funk	3811	FB_Jazz Pop _XS	4 / 4	1	102		●	:
BaMG	Funk	3812	FC_Jazz Pop _XS	4 / 4	1	102		●	:

Main Category	Sub Category	ARP No.	ARP Name	Time Signature	Length	Original Tempo	Accent	Random SFX	Voice Type
BaMG	Funk	3813	BA_Jazz Pop _XS	4 / 4	1	102		●	"Mega Finger+Slap"
BaMG	Funk	3814	MA_Gospel Funk _XS	4 / 4	4	106		●	:
BaMG	Funk	3815	MB_Gospel Funk _XS	4 / 4	4	106		●	:
BaMG	Funk	3816	MC_Gospel Funk _XS	4 / 4	4	106		●	:
BaMG	Funk	3817	FA_Gospel Funk _XS	4 / 4	1	106		●	:
BaMG	Funk	3818	FB_Gospel Funk _XS	4 / 4	1	106		●	:
BaMG	Funk	3819	FC_Gospel Funk _XS	4 / 4	1	106		●	:
BaMG	Funk	3820	BA_Gospel Funk _XS	4 / 4	1	106		●	:
BaMG	Funk	3821	EA_Gospel Funk _XS	4 / 4	4	106		●	:
BaMG	Funk	3822	EB_Gospel Funk _XS	4 / 4	3	106		●	:
BaMG	Funk	3823	MA_Funk Disco _XS	4 / 4	2	126		●	:
BaMG	Funk	3824	MB_Funk Disco _XS	4 / 4	2	126		●	:
BaMG	Funk	3825	MC_Funk Disco _XS	4 / 4	2	126		●	:
BaMG	Funk	3826	FA_Funk Disco _XS	4 / 4	1	126		●	:
BaMG	Funk	3827	FB_Funk Disco _XS	4 / 4	1	126		●	:
BaMG	Funk	3828	FC_Funk Disco _XS	4 / 4	1	126		●	:
BaMG	Funk	3829	BA_Funk Disco _XS	4 / 4	1	126		●	:
BaMG	Funk	3830	EA_Funk Disco _XS	4 / 4	4	126		●	:
BaMG	Funk	3831	EB_Funk Disco _XS	4 / 4	3	126		●	:
BaMG	Funk	3832	MA_70sDiscoFunk _XS	4 / 4	4	112		●	:
BaMG	Funk	3833	MB_70sDiscoFunk _XS	4 / 4	4	112		●	:
BaMG	Funk	3834	MC_70sDiscoFunk _XS	4 / 4	4	112		●	:
BaMG	Funk	3835	FA_70sDiscoFunk _XS	4 / 4	1	112		●	:
BaMG	Funk	3836	FB_70sDiscoFunk _XS	4 / 4	1	112		●	:
BaMG	Funk	3837	FC_70sDiscoFunk _XS	4 / 4	1	112		●	:
BaMG	Funk	3838	BA_70sDiscoFunk _XS	4 / 4	1	112		●	:
BaMG	Funk	3839	EA_70sDiscoFunk _XS	4 / 4	4	112		●	:
BaMG	Funk	3840	EB_70sDiscoFunk _XS	4 / 4	3	112		●	:
BaMG	Funk	3841	EA_OakCustomBass _XS	4 / 4	4	114		●	:
BaMG	Jazz	3842	MA_Modern Jazz _XS	4 / 4	16	218		●	"Mega Acoustic Bass"
BaMG	Jazz	3843	MB_Modern Jazz _XS	4 / 4	16	218		●	:
BaMG	Jazz	3844	MC_Modern Jazz _XS	4 / 4	16	218		●	:
BaMG	Jazz	3845	FA_Modern Jazz _XS	4 / 4	1	218		●	:
BaMG	Jazz	3846	FB_Modern Jazz _XS	4 / 4	1	218		●	:
BaMG	Jazz	3847	FC_Modern Jazz _XS	4 / 4	1	218		●	:
BaMG	Jazz	3848	BA_Modern Jazz _XS	4 / 4	1	218		●	:
BaMG	Jazz	3849	EA_Modern Jazz _XS	4 / 4	6	218		●	:
BaMG	Jazz	3850	EB_Modern Jazz _XS	4 / 4	7	218		●	:
BaMG	Jazz	3851	MA_JazzGtrClub _XS	4 / 4	8	142		●	:
BaMG	Jazz	3852	MB_JazzGtrClub _XS	4 / 4	8	142		●	:
BaMG	Jazz	3853	MC_JazzGtrClub _XS	4 / 4	8	142		●	:
BaMG	Jazz	3854	FA_JazzGtrClub _XS	4 / 4	1	142		●	:
BaMG	Jazz	3855	FB_JazzGtrClub _XS	4 / 4	1	142		●	:
BaMG	Jazz	3856	FC_JazzGtrClub _XS	4 / 4	1	142		●	:
BaMG	Jazz	3857	BA_JazzGtrClub _XS	4 / 4	1	142		●	:
BaMG	Jazz	3858	EA_JazzGtrClub _XS	4 / 4	6	142		●	:
BaMG	Jazz	3859	MA_JazzWaltzMed _XS	3 / 4	8	180		●	:
BaMG	Jazz	3860	MB_JazzWaltzMed _XS	3 / 4	8	180		●	:
BaMG	Jazz	3861	MC_JazzWaltzMed _XS	3 / 4	8	180		●	:
BaMG	Jazz	3862	FA_JazzWaltzMed _XS	3 / 4	1	180		●	:
BaMG	Jazz	3863	FB_JazzWaltzMed _XS	3 / 4	1	180		●	:
BaMG	Jazz	3864	FC_JazzWaltzMed _XS	3 / 4	1	180		●	:
BaMG	Jazz	3865	BA_JazzWaltzMed _XS	3 / 4	1	180		●	:
BaMG	Jazz	3866	EA_JazzWaltzMed _XS	3 / 4	7	180		●	:
BaMG	Jazz	3867	MA_R&R Shuffle _XS	4 / 4	4	192		●	:
BaMG	Jazz	3868	MB_R&R Shuffle _XS	4 / 4	4	192		●	:
BaMG	Jazz	3869	MC_R&R Shuffle _XS	4 / 4	4	192		●	:
BaMG	Jazz	3870	FA_R&R Shuffle _XS	4 / 4	1	192		●	:
BaMG	Jazz	3871	FB_R&R Shuffle _XS	4 / 4	1	192		●	:
BaMG	Jazz	3872	FC_R&R Shuffle _XS	4 / 4	1	192		●	:
BaMG	Jazz	3873	BA_R&R Shuffle _XS	4 / 4	1	192		●	:
BaMG	Jazz	3874	EA_R&R Shuffle _XS	4 / 4	5	192		●	:
BaMG	Jazz	3875	EB_R&R Shuffle _XS	4 / 4	5	192		●	:
BaMG	Jazz	3876	MA_ShuffleBlues _XS	4 / 4	4	115		●	"Mega Pick Open Mute"
BaMG	Jazz	3877	MB_ShuffleBlues _XS	4 / 4	4	115		●	:
BaMG	Jazz	3878	MC_ShuffleBlues _XS	4 / 4	4	115		●	:
BaMG	Jazz	3879	FA_ShuffleBlues _XS	4 / 4	1	115		●	:
BaMG	Jazz	3880	FB_ShuffleBlues _XS	4 / 4	1	115		●	:
BaMG	Jazz	3881	FC_ShuffleBlues _XS	4 / 4	1	115		●	:
BaMG	Jazz	3882	BA_ShuffleBlues _XS	4 / 4	1	115		●	:
BaMG	Jazz	3883	EA_ShuffleBlues _XS	4 / 4	5	115		●	:
BaMG	Jazz	3884	EB_ShuffleBlues _XS	4 / 4	6	115		●	:
BaMG	Jazz	3885	MA_Slow Blues 1 _XS	4 / 4	2	49		●	"Mega Finger+Slap"
BaMG	Jazz	3886	MB_Slow Blues 1 _XS	4 / 4	2	49		●	:
BaMG	Jazz	3887	MC_Slow Blues 1 _XS	4 / 4	2	49		●	:
BaMG	Jazz	3888	FA_Slow Blues 1 _XS	4 / 4	1	49		●	:
BaMG	Jazz	3889	FB_Slow Blues 1 _XS	4 / 4	1	49		●	:
BaMG	Jazz	3890	FC_Slow Blues 1 _XS	4 / 4	1	49		●	:
BaMG	Jazz	3891	BA_Slow Blues 1 _XS	4 / 4	1	49		●	:
BaMG	Jazz	3892	EA_Slow Blues 1 _XS	4 / 4	3	49		●	:
BaMG	Jazz	3893	EB_Slow Blues 1 _XS	4 / 4	3	49		●	:
BaMG	Jazz	3894	MA_Piano Boogie _XS	4 / 4	8	160		●	"Mega Acoustic Bass"
BaMG	Jazz	3895	MB_Piano Boogie _XS	4 / 4	4	160		●	:

Main Category	Sub Category	ARP No.	ARP Name	Time Signature	Length	Original Tempo	Accent	Random SFX	Voice Type
BaMG	Jazz	3896	MC_Piano Boogie _XS	4 / 4	4	160		●	"Mega Acoustic Bass"
BaMG	Jazz	3897	FA_Piano Boogie _XS	4 / 4	1	160		●	:
BaMG	Jazz	3898	FB_Piano Boogie _XS	4 / 4	1	160		●	:
BaMG	Jazz	3899	FC_Piano Boogie _XS	4 / 4	1	160		●	:
BaMG	Jazz	3900	BA_Piano Boogie _XS	4 / 4	1	160		●	:
BaMG	Jazz	3901	EA_Piano Boogie _XS	4 / 4	5	160		●	:
BaMG	Jazz	3902	EB_Piano Boogie _XS	4 / 4	5	160		●	:
BaMG	Latin	3903	MA_Salsa 1 _XS	4 / 4	4	177		●	:
BaMG	Latin	3904	MB_Salsa 1 _XS	4 / 4	4	177		●	:
BaMG	Latin	3905	MC_Salsa 1 _XS	4 / 4	4	177		●	:
BaMG	Latin	3906	FA_Salsa 1 _XS	4 / 4	1	177		●	:
BaMG	Latin	3907	FB_Salsa 1 _XS	4 / 4	1	177		●	:
BaMG	Latin	3908	FC_Salsa 1 _XS	4 / 4	1	177		●	:
BaMG	Latin	3909	BA_Salsa 1 _XS	4 / 4	1	177		●	:
BaMG	Latin	3910	EA_Salsa 1 _XS	4 / 4	5	177		●	:
BaMG	Latin	3911	EB_Salsa 1 _XS	4 / 4	5	177		●	:
BaMG	Latin	3912	MA_AfroCuban _XS	4 / 4	4	200		●	:
BaMG	Latin	3913	MB_AfroCuban _XS	4 / 4	4	200		●	:
BaMG	Latin	3914	MC_AfroCuban _XS	4 / 4	4	200		●	:
BaMG	Latin	3915	FA_AfroCuban _XS	4 / 4	1	200		●	:
BaMG	Latin	3916	FB_AfroCuban _XS	4 / 4	1	200		●	:
BaMG	Latin	3917	FC_AfroCuban _XS	4 / 4	1	200		●	:
BaMG	Latin	3918	BA_AfroCuban _XS	4 / 4	1	200		●	:
BaMG	Latin	3919	EA_AfroCuban _XS	4 / 4	6	200		●	:
BaMG	Latin	3920	EB_AfroCuban _XS	4 / 4	5	200		●	:
BaMG	Latin	3921	MA_Brazil Samba _XS	4 / 4	4	96		●	"Mega Finger+Slap"
BaMG	Latin	3922	MB_Brazil Samba _XS	4 / 4	4	96		●	:
BaMG	Latin	3923	MC_Brazil Samba _XS	4 / 4	4	96		●	:
BaMG	Latin	3924	FA_Brazil Samba _XS	4 / 4	1	96		●	:
BaMG	Latin	3925	FB_Brazil Samba _XS	4 / 4	1	96		●	:
BaMG	Latin	3926	FC_Brazil Samba _XS	4 / 4	1	96		●	:
BaMG	Latin	3927	BA_Brazil Samba _XS	4 / 4	1	96		●	:
BaMG	Latin	3928	EA_Brazil Samba _XS	4 / 4	4	96		●	:
BaMG	Latin	3929	EB_Brazil Samba _XS	4 / 4	4	96		●	:
BaMG	Latin	3930	MA_Bomba _XS	4 / 4	4	99		●	"Mega Acoustic Bass"
BaMG	Latin	3931	MB_Bomba _XS	4 / 4	4	99		●	:
BaMG	Latin	3932	MC_Bomba _XS	4 / 4	4	99		●	:
BaMG	Latin	3933	FA_Bomba _XS	4 / 4	1	99		●	:
BaMG	Latin	3934	FB_Bomba _XS	4 / 4	1	99		●	:
BaMG	Latin	3935	FC_Bomba _XS	4 / 4	1	99		●	:
BaMG	Latin	3936	BA_Bomba _XS	4 / 4	1	99		●	:
BaMG	Latin	3937	EA_Bomba _XS	4 / 4	3	99		●	:
BaMG	Latin	3938	EB_Bomba _XS	4 / 4	3	99		●	:
BaMG	Latin	3939	MA_Bossa _XS	4 / 4	4	124		●	"Mega Finger+Slap"
BaMG	Latin	3940	MB_Bossa _XS	4 / 4	4	124		●	:
BaMG	Latin	3941	MC_Bossa _XS	4 / 4	4	124		●	:
BaMG	Latin	3942	FA_Bossa _XS	4 / 4	1	124		●	:
BaMG	Latin	3943	FB_Bossa _XS	4 / 4	1	124		●	:
BaMG	Latin	3944	FC_Bossa _XS	4 / 4	1	124		●	:
BaMG	Latin	3945	BA_Bossa _XS	4 / 4	1	124		●	:
BaMG	Latin	3946	EA_Bossa _XS	4 / 4	4	123		●	:
BaMG	Latin	3947	EB_Bossa _XS	4 / 4	4	123		●	:
BaMG	Latin	3948	MA_Merengue _XS	4 / 4	4	130		●	:
BaMG	Latin	3949	MB_Merengue _XS	4 / 4	4	130		●	:
BaMG	Latin	3950	MC_Merengue _XS	4 / 4	4	130		●	:
BaMG	Latin	3951	FA_Merengue _XS	4 / 4	1	130		●	:
BaMG	Latin	3952	FB_Merengue _XS	4 / 4	1	130		●	:
BaMG	Latin	3953	FC_Merengue _XS	4 / 4	1	130		●	:
BaMG	Latin	3954	BA_Merengue _XS	4 / 4	1	130		●	:
BaMG	Latin	3955	EA_Merengue _XS	4 / 4	3	130		●	:
BaMG	Latin	3956	EB_Merengue _XS	4 / 4	3	130		●	:
BaMG	Latin	3957	MA_Guaguanco _XS	4 / 4	4	120		●	"Mega Acoustic Bass"
BaMG	Latin	3958	MB_Guaguanco _XS	4 / 4	4	120		●	:
BaMG	Latin	3959	MC_Guaguanco _XS	4 / 4	4	120		●	:
BaMG	Latin	3960	FA_Guaguanco _XS	4 / 4	1	120		●	:
BaMG	Latin	3961	FB_Guaguanco _XS	4 / 4	1	120		●	:
BaMG	Latin	3962	FC_Guaguanco _XS	4 / 4	1	120		●	:
BaMG	Latin	3963	BA_Guaguanco _XS	4 / 4	1	120		●	:
BaMG	Latin	3964	EA_Guaguanco _XS	4 / 4	3	120		●	:
BaMG	Latin	3965	EB_Guaguanco _XS	4 / 4	3	120		●	:
BaMG	World	3966	MA_ReggaeShffle _XS	4 / 4	4	90		●	"Mega Finger+Slap"
BaMG	World	3967	MB_ReggaeShffle _XS	4 / 4	4	90		●	:
BaMG	World	3968	MC_ReggaeShffle _XS	4 / 4	4	90		●	:
BaMG	World	3969	FA_ReggaeShffle _XS	4 / 4	1	90		●	:
BaMG	World	3970	FB_ReggaeShffle _XS	4 / 4	1	90		●	:
BaMG	World	3971	FC_ReggaeShffle _XS	4 / 4	1	90		●	:
BaMG	World	3972	BA_ReggaeShffle _XS	4 / 4	1	90		●	:
BaMG	World	3973	EA_ReggaeShffle _XS	4 / 4	3	90		●	:
BaMG	World	3974	EB_ReggaeShffle _XS	4 / 4	4	90		●	:
BaMG	World	3975	MA_RumbaFlamenc _XS	4 / 4	4	106		●	:
BaMG	World	3976	MB_RumbaFlamenc _XS	4 / 4	4	106		●	:
BaMG	World	3977	MC_RumbaFlamenc _XS	4 / 4	4	106		●	:
BaMG	World	3978	FA_RumbaFlamenc _XS	4 / 4	1	106		●	:

Main Category	Sub Category	ARP No.	ARP Name	Time Signature	Length	Original Tempo	Accent	Random SFX	Voice Type
BaMG	World	3979	FB_RumbaFlamenc _XS	4 / 4	1	106		●	"Mega Finger+Slap"
BaMG	World	3980	FC_RumbaFlamenc _XS	4 / 4	1	106		●	:
BaMG	World	3981	BA_RumbaFlamenc _XS	4 / 4	1	106		●	:
BaMG	World	3982	EA_RumbaFlamenc _XS	4 / 4	3	106		●	:
BaMG	World	3983	EB_RumbaFlamenc _XS	4 / 4	3	106		●	:
BaMG	World	3984	MA_ModBluegrass _XS	4 / 4	4	121		●	"Mega Finger+Harmonic"
BaMG	World	3985	MB_ModBluegrass _XS	4 / 4	4	121		●	:
BaMG	World	3986	MC_ModBluegrass _XS	4 / 4	4	121		●	:
BaMG	World	3987	FA_ModBluegrass _XS	4 / 4	1	121		●	:
BaMG	World	3988	FB_ModBluegrass _XS	4 / 4	1	121		●	:
BaMG	World	3989	FC_ModBluegrass _XS	4 / 4	1	121		●	:
BaMG	World	3990	BA_ModBluegrass _XS	4 / 4	1	121		●	:
BaMG	World	3991	EA_ModBluegrass _XS	4 / 4	6	121		●	:
BaMG	World	3992	MA_Irish Hymn _XS	3 / 4	4	70		●	"Mega Finger+Slap"
BaMG	World	3993	MB_Irish Hymn _XS	3 / 4	4	70		●	:
BaMG	World	3994	MC_Irish Hymn _XS	3 / 4	4	70		●	:
BaMG	World	3995	FA_Irish Hymn _XS	3 / 4	1	70		●	:
BaMG	World	3996	FB_Irish Hymn _XS	3 / 4	1	70		●	:
BaMG	World	3997	FC_Irish Hymn _XS	3 / 4	1	70		●	:
BaMG	World	3998	BA_Irish Hymn _XS	3 / 4	1	70		●	:
BaMG	World	3999	EA_Irish Hymn _XS	3 / 4	5	70		●	:
BaMG	World	4000	EB_Irish Hymn _XS	3 / 4	5	70		●	:
BaMG	World	4001	MA_Saeidy _XS	4 / 4	2	120		●	:
BaMG	World	4002	MB_Saeidy _XS	4 / 4	2	120		●	:
BaMG	World	4003	MC_Saeidy _XS	4 / 4	4	120		●	:
BaMG	World	4004	FA_Saeidy _XS	4 / 4	1	120		●	:
BaMG	World	4005	FB_Saeidy _XS	4 / 4	1	120		●	:
BaMG	World	4006	FC_Saeidy _XS	4 / 4	1	120		●	:
BaMG	World	4007	BA_Saeidy _XS	4 / 4	1	120		●	:
BaMG	World	4008	EA_Saeidy _XS	4 / 4	4	120		●	:
Strng	Balad	4009	MA_8Beat Ballad _XS	4 / 4	4	101			Strings
Strng	Balad	4010	MB_8Beat Ballad _XS	4 / 4	4	101			:
Strng	Balad	4011	MC_8Beat Ballad _XS	4 / 4	4	101			:
Strng	Balad	4012	FA_8Beat Ballad _XS	4 / 4	1	101			:
Strng	Balad	4013	FB_8Beat Ballad _XS	4 / 4	1	101			:
Strng	Balad	4014	FC_8Beat Ballad _XS	4 / 4	1	101			:
Strng	Balad	4015	BA_8Beat Ballad _XS	4 / 4	1	101			:
Strng	Balad	4016	EA_8Beat Ballad _XS	4 / 4	5	101			:
Strng	Balad	4017	EB_8Beat Ballad _XS	4 / 4	5	101			:
Strng	R&B-M	4018	MC_New R&B 2	4 / 4	1	97			Harp
Strng	R&B-M	4019	MD_New R&B 2	4 / 4	1	97			:
Strng	R&B-M	4020	MA_New R&B 3 _ES	4 / 4	2	90			Strings
Strng	R&B-M	4021	MB_New R&B 3 _ES	4 / 4	2	90			:
Strng	R&B-M	4022	MC_New R&B 3 _ES	4 / 4	2	90			:
Strng	R&B-M	4023	MD_New R&B 3 /1 _ES	4 / 4	2	90			:
Strng	R&B-M	4024	MD_New R&B 3 /2 _ES	4 / 4	2	90			:
Strng	R&B-M	4025	FA_New R&B 3 _ES	4 / 4	1	90			:
Strng	R&B-M	4026	FC_New R&B 3 _ES	4 / 4	2	90			:
Strng	R&B-M	4027	MA_Pop R&B _XS	4 / 4	4	67			:
Strng	R&B-M	4028	MB_Pop R&B _XS	4 / 4	4	67			:
Strng	R&B-M	4029	MC_Pop R&B _XS	4 / 4	4	67			:
Strng	R&B-M	4030	FA_Pop R&B _XS	4 / 4	1	67			:
Strng	R&B-M	4031	FB_Pop R&B _XS	4 / 4	1	67			:
Strng	R&B-M	4032	FC_Pop R&B _XS	4 / 4	1	67			:
Strng	R&B-M	4033	MA1_R&B Ana Pop _XS	4 / 4	4	95			Harp
Strng	R&B-M	4034	MB1_R&B Ana Pop _XS	4 / 4	4	95			:
Strng	R&B-M	4035	MC1_R&B Ana Pop _XS	4 / 4	4	95			:
Strng	R&B-M	4036	FA1_R&B Ana Pop _XS	4 / 4	1	95			:
Strng	R&B-M	4037	FB1_R&B Ana Pop _XS	4 / 4	1	95			:
Strng	R&B-M	4038	FC1_R&B Ana Pop _XS	4 / 4	1	95			:
Strng	R&B-M	4039	BA1_R&B Ana Pop _XS	4 / 4	1	95			:
Strng	R&B-M	4040	MA2_R&B Ana Pop _XS	4 / 4	4	95			Strings
Strng	R&B-M	4041	MB2_R&B Ana Pop _XS	4 / 4	4	95			:
Strng	R&B-M	4042	MC2_R&B Ana Pop _XS	4 / 4	4	95			:
Strng	R&B-M	4043	FA2_R&B Ana Pop _XS	4 / 4	1	95			:
Strng	R&B-M	4044	FB2_R&B Ana Pop _XS	4 / 4	1	95			:
Strng	R&B-M	4045	FC2_R&B Ana Pop _XS	4 / 4	1	95			:
Strng	R&B-M	4046	MC_Smooth 1 _ES	4 / 4	2	115			Pizzicato Strings
Strng	R&B-M	4047	MD_Smooth 1 _ES	4 / 4	2	115			:
Strng	R&B-M	4048	MC_Flip Hop 1 _ES	4 / 4	2	132			:
Strng	R&B-M	4049	MD_Flip Hop 1 _ES	4 / 4	2	132			:
Strng	R&B-M	4050	FB_Flip Hop 1 _ES	4 / 4	1	132			:
Strng	R&B-M	4051	MC_Hip Hop 1 _ES	4 / 4	2	105			:
Strng	R&B-M	4052	MD_Hip Hop 1 _ES	4 / 4	2	105			:
Strng	R&B-M	4053	FB_Hip Hop 1 _ES	4 / 4	1	105			:
Strng	R&B-M	4054	MD_Hip Hop 3 _ES	4 / 4	2	104			Harp
Strng	Tekno	4055	MA_Psyche Pizz1 _ES	4 / 4	1	143			Pizzicato Strings
Strng	Tekno	4056	MA_Psyche Pizz2 _ES	4 / 4	1	143			:
Strng	Tekno	4057	MA_Psyche Pizz3 _ES	4 / 4	2	143			:
Strng	Tekno	4058	MA_Psyche Pizz4 _ES	4 / 4	3	143			:
Strng	Tekno	4059	MA_Psyche Pizz5 _ES	4 / 4	2	143			:
Strng	World	4060	MA_Irish Hymn _XS	3 / 4	4	70			Strings
Strng	World	4061	MB_Irish Hymn _XS	3 / 4	4	70			:

Main Category	Sub Category	ARP No.	ARP Name	Time Signature	Length	Original Tempo	Accent	Random SFX	Voice Type
Strng	World	4062	MC_Irish Hymn _XS	3 / 4	4	70			Strings
Strng	World	4063	FA_Irish Hymn _XS	3 / 4	1	70			:
Strng	World	4064	FB_Irish Hymn _XS	3 / 4	1	70			:
Strng	World	4065	FC_Irish Hymn _XS	3 / 4	1	70			:
Strng	World	4066	BA_Irish Hymn _XS	3 / 4	1	70			:
Strng	World	4067	EA_Irish Hymn _XS	3 / 4	5	70			:
Strng	World	4068	EB_Irish Hymn _XS	3 / 4	5	70			:
Strng	World	4069	MD_Turkish _ES	9 / 8	2	125			:
Strng	World	4070	MF_Turkish _ES	4 / 4	2	105			:
Strng	World	4071	IA_Turkish _ES	4 / 4	2	86			:
Strng	Genrl	4072	MA1_Orchestra _XS	4 / 4	4	102			:
Strng	Genrl	4073	MB1_Orchestra _XS	4 / 4	8	102			:
Strng	Genrl	4074	MC1_Orchestra _XS	4 / 4	8	102			:
Strng	Genrl	4075	MD1_Orchestra _XS	4 / 4	4	102			:
Strng	Genrl	4076	FA1_Orchestra _XS	4 / 4	1	102			:
Strng	Genrl	4077	MA2_Orchestra _XS	4 / 4	4	102			Harp
Strng	Genrl	4078	MB2_Orchestra _XS	4 / 4	8	102			:
Strng	Genrl	4079	MC2_Orchestra _XS	4 / 4	8	102			:
Strng	Genrl	4080	MD2_Orchestra _XS	4 / 4	4	102			:
Strng	Genrl	4081	FA2_Orchestra _XS	4 / 4	1	102			:
Strng	Genrl	4082	MA1_Baroque _XS	4 / 4	4	88			Strings
Strng	Genrl	4083	MB1_Baroque _XS	4 / 4	4	88			:
Strng	Genrl	4084	MC1_Baroque _XS	4 / 4	4	88			:
Strng	Genrl	4085	MD1_Baroque _XS	4 / 4	4	88			:
Strng	Genrl	4086	FA1_Baroque _XS	4 / 4	1	88			:
Strng	Genrl	4087	FB1_Baroque _XS	4 / 4	1	88			:
Strng	Genrl	4088	FC1_Baroque _XS	4 / 4	1	88			:
Strng	Genrl	4089	FD1_Baroque _XS	4 / 4	1	88			:
Strng	Genrl	4090	MA2_Baroque _XS	4 / 4	4	88			:
Strng	Genrl	4091	MB2_Baroque _XS	4 / 4	4	88			:
Strng	Genrl	4092	MC2_Baroque _XS	4 / 4	4	88			:
Strng	Genrl	4093	MD2_Baroque _XS	4 / 4	4	88			:
Strng	Genrl	4094	FA2_Baroque _XS	4 / 4	1	88			:
Strng	Genrl	4095	FB2_Baroque _XS	4 / 4	1	88			:
Strng	Genrl	4096	FC2_Baroque _XS	4 / 4	1	88			:
Strng	Genrl	4097	FD2_Baroque _XS	4 / 4	1	88			:
Strng	Genrl	4098	MA_Strings1	4 / 4	1	101			:
Strng	Genrl	4099	MA_Strings2	4 / 4	1	101			:
Strng	Genrl	4100	MA_Strings3	4 / 4	1	101			:
Strng	Genrl	4101	MA_Strings4	4 / 4	1	101			:
Strng	Genrl	4102	MA_Strings5	4 / 4	1	101			:
Strng	Genrl	4103	MA_Strings6	4 / 4	1	101			:
Strng	Genrl	4104	MA_Strings7	4 / 4	1	101			:
Strng	Genrl	4105	MA_Strings8	4 / 4	1	101			:
Strng	Genrl	4106	MA_Strings9*	4 / 4	2	120			:
Strng	Genrl	4107	MA_Jupiter	4 / 4	4	120			:
Strng	Genrl	4108	MA_Strings Up1 _ES*	4 / 4	1	120			:
Strng	Genrl	4109	MA_StringsDown1 _ES*	4 / 4	1	120			:
Strng	Genrl	4110	MA_Strings Up2 _ES	4 / 4	1	120			:
Strng	Genrl	4111	MA_StringsDown2 _ES	4 / 4	1	120			:
Strng	Genrl	4112	MA_Cello1*	4 / 4	2	120			Cello
Strng	Genrl	4113	MA_Cello2*	4 / 4	2	120			:
Strng	Genrl	4114	MA_OrchStrings	4 / 4	4	126			Strings
Strng	Genrl	4115	MA_OrchChord	4 / 4	4	126			:
Strng	Genrl	4116	MA_Pizz1	4 / 4	1	120			Pizzicato Strings
Strng	Genrl	4117	MA_Pizz2	4 / 4	1	120			:
Strng	Genrl	4118	MA_Pizz3	4 / 4	1	120			:
Strng	Genrl	4119	MA_Pizz4	4 / 4	1	124			:
Strng	Genrl	4120	MA_Pizz5	4 / 4	1	124			:
Strng	Genrl	4121	MA_Harp1	4 / 4	2	120			Harp
Strng	Genrl	4122	MA_Harp2	4 / 4	2	120			:
Strng	Genrl	4123	MA_Harp3	4 / 4	1	120			:
Strng	Genrl	4124	MA_Harp4	4 / 4	1	120			:
Brass	HipHp	4125	MA_Hip Break _XS	4 / 4	4	98			Brass Section
Brass	HipHp	4126	MB_Hip Break _XS	4 / 4	4	98			:
Brass	HipHp	4127	MC_Hip Break _XS	4 / 4	4	98			:
Brass	HipHp	4128	FA_Hip Break _XS	4 / 4	1	98			:
Brass	HipHp	4129	FB_Hip Break _XS	4 / 4	1	98			:
Brass	HipHp	4130	FC_Hip Break _XS	4 / 4	1	98			:
Brass	HipHp	4131	BA_Hip Break _XS	4 / 4	1	98			:
Brass	R&B-M	4132	FC_New Gospel	4 / 4	2	90			:
Brass	R&B-C	4133	FA_Soul 2	4 / 4	1	120			:
Brass	R&B-C	4134	MA_70sChartSoul _XS	4 / 4	2	108			"Velo Falls"
Brass	R&B-C	4135	MB_70sChartSoul _XS	4 / 4	2	108			:
Brass	R&B-C	4136	MC_70sChartSoul _XS	4 / 4	2	108			:
Brass	R&B-C	4137	FA_70sChartSoul _XS	4 / 4	1	108			:
Brass	R&B-C	4138	FB_70sChartSoul _XS	4 / 4	1	108			:
Brass	R&B-C	4139	FC_70sChartSoul _XS	4 / 4	1	108			:
Brass	R&B-C	4140	BA_70sChartSoul _XS	4 / 4	1	108			:
Brass	R&B-C	4141	EA_70sChartSoul _XS	4 / 4	5	108			:
Brass	R&B-C	4142	EB_70sChartSoul _XS	4 / 4	3	108			:
Brass	Funk	4143	MB_Funk 3	4 / 4	2	132			Brass Section
Brass	Funk	4144	MC_Funk 3	4 / 4	4	132			:

Main Category	Sub Category	ARP No.	ARP Name	Time Signature	Length	Original Tempo	Accent	Random SFX	Voice Type
Brass	Funk	4145	MD_Funk 3	4 / 4	2	132			Brass Section
Brass	Funk	4146	IA_Funk 3	4 / 4	1	132			:
Brass	Funk	4147	FA_Funk 3	4 / 4	1	132			:
Brass	Funk	4148	FB_Funk 3	4 / 4	1	132			:
Brass	Funk	4149	MC_Jazz Funk 2	4 / 4	4	120			:
Brass	Funk	4150	MD_Jazz Funk 2 /1	4 / 4	4	120			:
Brass	Funk	4151	MD_Jazz Funk 2 /2	4 / 4	1	120			:
Brass	Funk	4152	IA_Jazz Funk 2	4 / 4	1	120			:
Brass	Funk	4153	FA_Jazz Funk 2	4 / 4	1	120			:
Brass	Latin	4154	MB1_Salsa 2	4 / 4	1	123			:
Brass	Latin	4155	MC1_Salsa 2	4 / 4	1	123			:
Brass	Latin	4156	FC1_Salsa 2	4 / 4	2	123			:
Brass	Latin	4157	MA2_Salsa 2	4 / 4	1	123			:
Brass	Latin	4158	MB2_Salsa 2	4 / 4	4	120			:
Brass	Latin	4159	MA3_Salsa 2 _ES	4 / 4	2	123			:
Brass	Latin	4160	MB3_Salsa 2 _ES	4 / 4	2	123			:
Brass	Latin	4161	MC3_Salsa 2 _ES	4 / 4	2	123			:
Brass	Latin	4162	FA3_Salsa 2 _ES	4 / 4	1	123			:
Brass	Latin	4163	FC3_Salsa 2 _ES	4 / 4	1	123			:
Brass	Latin	4164	MD1_Samba	4 / 4	4	120			:
Brass	Latin	4165	IA1_Samba	4 / 4	2	120			:
Brass	Latin	4166	FC1_Samba	4 / 4	2	120			:
Brass	Latin	4167	MB2_Samba	4 / 4	4	120			Trombone
Brass	Latin	4168	MC2_Samba	4 / 4	4	120			:
Brass	World	4169	MC_Turkish	9 / 8	2	125			Mute Trumpet
Brass	Genrl	4170	MA_Orchestra _XS	4 / 4	4	102			French Horn
Brass	Genrl	4171	MB_Orchestra _XS	4 / 4	8	102			:
Brass	Genrl	4172	MC_Orchestra _XS	4 / 4	8	102			:
Brass	Genrl	4173	MD_Orchestra _XS	4 / 4	4	102			:
Brass	Genrl	4174	FA_Orchestra _XS	4 / 4	1	102			:
Brass	Genrl	4175	MB_Baroque _XS	4 / 4	4	88			Trumpet
Brass	Genrl	4176	MD_Baroque _XS	4 / 4	4	88			:
Brass	Genrl	4177	FA_Baroque _XS	4 / 4	1	88			:
Brass	Genrl	4178	FD_Baroque _XS	4 / 4	1	88			:
Brass	Genrl	4179	MA_Brass Sec1	4 / 4	1	120			Brass Section
Brass	Genrl	4180	MA_Brass Sec2	4 / 4	1	123			:
Brass	Genrl	4181	MA_Brass Sec3	4 / 4	1	120			:
Brass	Genrl	4182	MA_Brass Sec4	4 / 4	1	120			:
Brass	Genrl	4183	MA_Brass Sec5	4 / 4	1	120			:
Brass	Genrl	4184	MA_Brass Sec6	4 / 4	1	120			:
Brass	Genrl	4185	MA_Brass Sec7	4 / 4	1	120			:
RdPp	HipHp	4186	MD_Hip Hop 1 _ES	4 / 4	2	105			Saxophone
RdPp	HipHp	4187	FC_Hip Hop 1 _ES	4 / 4	2	105			:
RdPp	R&B-C	4188	MB_Soul 2 _ES	4 / 4	4	120			:
RdPp	R&B-C	4189	MC_Soul 2 _ES	4 / 4	4	120			:
RdPp	R&B-C	4190	FB_Soul 2 _ES	4 / 4	1	120			:
RdPp	R&B-C	4191	FC_Soul 2 _ES	4 / 4	1	120			:
RdPp	Funk	4192	MA_Club Jazz 2 _XS	4 / 4	4	92			Sax Section
RdPp	Funk	4193	MB_Club Jazz 2 _XS	4 / 4	4	92			:
RdPp	Funk	4194	MC_Club Jazz 2 _XS	4 / 4	4	92			:
RdPp	Funk	4195	FA_Club Jazz 2 _XS	4 / 4	1	92			:
RdPp	Funk	4196	FB_Club Jazz 2 _XS	4 / 4	1	92			:
RdPp	Funk	4197	FC_Club Jazz 2 _XS	4 / 4	1	92			:
RdPp	Funk	4198	BA_Club Jazz 2 _XS	4 / 4	1	92			:
RdPp	Funk	4199	MA_Club Jazz 2 _ES	4 / 4	4	92			:
RdPp	Funk	4200	MB_Club Jazz 2 _ES	4 / 4	4	92			:
RdPp	Funk	4201	MC_Club Jazz 2 _ES	4 / 4	4	92			:
RdPp	Funk	4202	FA_Club Jazz 2 _ES	4 / 4	1	92			:
RdPp	Funk	4203	FB_Club Jazz 2 _ES	4 / 4	1	92			:
RdPp	Funk	4204	FC_Club Jazz 2 _ES	4 / 4	1	92			:
RdPp	Funk	4205	BA_Club Jazz 2 _ES	4 / 4	1	92			:
RdPp	Latin	4206	MA_Samba _ES	4 / 4	2	120			Saxophone
RdPp	Latin	4207	MC_Samba _ES	4 / 4	4	120			:
RdPp	Latin	4208	MD_Samba _ES	4 / 4	4	120			:
RdPp	Latin	4209	FC_Samba _ES	4 / 4	2	120			:
RdPp	World	4210	MA1_Turkish _ES	4 / 4	2	105			Ney
RdPp	World	4211	MF1_Turkish _ES	4 / 4	2	105			:
RdPp	World	4212	MB2_Turkish _ES	4 / 4	2	105			Saxophone
RdPp	World	4213	MC2_Turkish _ES	9 / 8	2	125			:
RdPp	World	4214	MD2_Turkish _ES	9 / 8	2	125			:
RdPp	World	4215	ME2_Turkish	4 / 4	2	105			:
RdPp	Genrl	4216	MC_Baroque _XS	4 / 4	4	88			Oboe
RdPp	Genrl	4217	MD_Baroque _XS	4 / 4	4	88			:
RdPp	Genrl	4218	FB_Baroque _XS	4 / 4	1	88			:
RdPp	Genrl	4219	FC_Baroque _XS	4 / 4	1	88			:
RdPp	Genrl	4220	FD_Baroque _XS	4 / 4	1	88			:
RdPp	Genrl	4221	Flute Accent _ES	4 / 4	1	102			Flute
RdPp	Genrl	4222	Flute1	4 / 4	1	120			:
RdPp	Genrl	4223	Flute2	4 / 4	1	120			:
RdPp	Genrl	4224	Flute3	4 / 4	1	120			:
RdPp	Genrl	4225	Flutter1	4 / 4	1	120			Flute/Reed
RdPp	Genrl	4226	Flutter2	4 / 4	1	120			:
RdPp	Genrl	4227	Flutter3	4 / 4	1	120			:

Main Category	Sub Category	ARP No.	ARP Name	Time Signature	Length	Original Tempo	Accent	Random SFX	Voice Type
Lead	HipHp	4228	MB_Hip Rock 1 _XS	4 / 4	4	90			Synth Lead
Lead	HipHp	4229	MC_Hip Rock 1 _XS	4 / 4	4	90			:
Lead	HipHp	4230	FA_Hip Rock 1 _XS	4 / 4	1	90			:
Lead	HipHp	4231	FB_Hip Rock 1 _XS	4 / 4	1	90			:
Lead	HipHp	4232	FC_Hip Rock 1 _XS	4 / 4	1	90			:
Lead	HipHp	4233	MA_Regeton _XS	4 / 4	4	98			:
Lead	HipHp	4234	MB_Regeton _XS	4 / 4	4	98			:
Lead	HipHp	4235	MC_Regeton _XS	4 / 4	4	98			:
Lead	HipHp	4236	FA_Regeton _XS	4 / 4	1	98			:
Lead	HipHp	4237	FB_Regeton _XS	4 / 4	1	98			:
Lead	HipHp	4238	FC_Regeton _XS	4 / 4	1	98			:
Lead	HipHp	4239	MA_Rap Lead1	4 / 4	2	120			:
Lead	HipHp	4240	MA_Rap Lead2	4 / 4	2	100			:
Lead	R&B-M	4241	MB_R&B Disco _ES	4 / 4	2	110			:
Lead	R&B-M	4242	MC_R&B Disco _ES	4 / 4	1	110			:
Lead	R&B-M	4243	MD_R&B Disco _ES	4 / 4	2	110			:
Lead	R&B-M	4244	FA_R&B Disco _ES	4 / 4	1	110			:
Lead	R&B-M	4245	FB_R&B Disco _ES	4 / 4	1	110			:
Lead	R&B-M	4246	FC_R&B Disco _ES	4 / 4	2	110			:
Lead	R&B-M	4247	MA_R&B Ballad 1 _XS	4 / 4	4	113			:
Lead	R&B-M	4248	MB_R&B Ballad 1 _XS	4 / 4	4	113			:
Lead	R&B-M	4249	MC_R&B Ballad 1 _XS	4 / 4	4	113			:
Lead	R&B-M	4250	FA_R&B Ballad 1 _XS	4 / 4	1	113			:
Lead	R&B-M	4251	FB_R&B Ballad 1 _XS	4 / 4	1	113			:
Lead	R&B-M	4252	FC_R&B Ballad 1 _XS	4 / 4	1	113			:
Lead	Funk	4253	MA_Club Jazz 1 _XS	4 / 4	4	125			:
Lead	Funk	4254	MB_Club Jazz 1 _XS	4 / 4	4	125			:
Lead	Funk	4255	MC_Club Jazz 1 _XS	4 / 4	4	125			:
Lead	Funk	4256	FA_Club Jazz 1 _XS	4 / 4	1	125			:
Lead	Funk	4257	FB_Club Jazz 1 _XS	4 / 4	1	125			:
Lead	Funk	4258	FC_Club Jazz 1 _XS	4 / 4	1	125			:
Lead	Funk	4259	BA_Club Jazz 1 _XS	4 / 4	1	125			:
Lead	Funk	4260	MA_Club Jazz 1 _ES	4 / 4	2	125			:
Lead	Funk	4261	MB_Club Jazz 1 _ES	4 / 4	4	125			:
Lead	Funk	4262	MC_Club Jazz 1 _ES	4 / 4	4	125			:
Lead	Funk	4263	FA_Club Jazz 1 _ES	4 / 4	1	125			:
Lead	Funk	4264	FB_Club Jazz 1 _ES	4 / 4	1	125			:
Lead	Funk	4265	FC_Club Jazz 1 _ES	4 / 4	1	125			:
Lead	Funk	4266	BA_Club Jazz 1 _ES	4 / 4	1	125			:
Lead	Tekno	4267	MA_Trance 1 _XS	4 / 4	8	142			:
Lead	Tekno	4268	MB_Trance 1 _XS	4 / 4	4	142			:
Lead	Tekno	4269	MC_Trance 1 _XS	4 / 4	16	142			:
Lead	Tekno	4270	FA_Trance 1 _XS	4 / 4	2	142			:
Lead	Tekno	4271	FB_Trance 1 _XS	4 / 4	8	142			:
Lead	Tekno	4272	FC_Trance 1 _XS	4 / 4	8	142			:
Lead	Tekno	4273	BA_Trance 1 _XS	4 / 4	1	142			:
Lead	Tekno	4274	MA_Trance 1 _ES	4 / 4	8	142			:
Lead	Tekno	4275	MB_Trance 1 _ES	4 / 4	4	142			:
Lead	Tekno	4276	MC_Trance 1 _ES	4 / 4	16	142			:
Lead	Tekno	4277	FA_Trance 1 _ES	4 / 4	2	142			:
Lead	Tekno	4278	FB_Trance 1 _ES	4 / 4	8	142			:
Lead	Tekno	4279	FC_Trance 1 _ES	4 / 4	8	142			:
Lead	Tekno	4280	BA_Trance 1 _ES	4 / 4	1	142			:
Lead	Tekno	4281	MA_Trance 3 _XS	4 / 4	2	140			:
Lead	Tekno	4282	MB_Trance 3 _XS	4 / 4	2	140			:
Lead	Tekno	4283	MC_Trance 3 _XS	4 / 4	3	140			:
Lead	Tekno	4284	FA_Trance 3 _XS	4 / 4	2	140			:
Lead	Tekno	4285	FB_Trance 3 _XS	4 / 4	2	140			:
Lead	Tekno	4286	FC_Trance 3 _XS	4 / 4	4	140			:
Lead	Tekno	4287	BA_Trance 3 _XS	4 / 4	1	140			:
Lead	Tekno	4288	MA_Trance 3 _ES	4 / 4	2	140			:
Lead	Tekno	4289	MB_Trance 3 _ES	4 / 4	2	140			:
Lead	Tekno	4290	MC_Trance 3 _ES	4 / 4	3	140			:
Lead	Tekno	4291	FA_Trance 3 _ES	4 / 4	2	140			:
Lead	Tekno	4292	FB_Trance 3 _ES	4 / 4	2	140			:
Lead	Tekno	4293	FC_Trance 3 _ES	4 / 4	4	140			:
Lead	Tekno	4294	BA_Trance 3 _ES	4 / 4	1	140			:
Lead	Tekno	4295	MA_Trance 4 _XS	4 / 4	4	130			:
Lead	Tekno	4296	MB_Trance 4 _XS	4 / 4	2	130			:
Lead	Tekno	4297	MC_Trance 4 _XS	4 / 4	4	130			:
Lead	Tekno	4298	FA_Trance 4 _XS	4 / 4	4	130			:
Lead	Tekno	4299	FB_Trance 4 _XS	4 / 4	2	130			:
Lead	Tekno	4300	FC_Trance 4 _XS	4 / 4	4	130			:
Lead	Tekno	4301	BA_Trance 4 _XS	4 / 4	2	130			:
Lead	Tekno	4302	MA_Trance 4 _ES	4 / 4	4	130			:
Lead	Tekno	4303	MB_Trance 4 _ES	4 / 4	2	130			:
Lead	Tekno	4304	MC_Trance 4 _ES	4 / 4	4	130			:
Lead	Tekno	4305	FA_Trance 4 _ES	4 / 4	4	130			:
Lead	Tekno	4306	FB_Trance 4 _ES	4 / 4	2	130			:
Lead	Tekno	4307	FC_Trance 4 _ES	4 / 4	4	130			:
Lead	Tekno	4308	BA_Trance 4 _ES	4 / 4	2	130			:
Lead	Tekno	4309	MA_Trance Lead1 _ES	4 / 4	8	143			:
Lead	Tekno	4310	MA_Trance Lead2 _ES	4 / 4	2	143			:

Main Category	Sub Category	ARP No.	ARP Name	Time Signature	Length	Original Tempo	Accent	Random SFX	Voice Type
Lead	Tekno	4311	MA_Trance Lead3 _ES	4 / 4	2	143			Synth Lead
Lead	Tekno	4312	MA_Trance Lead4 _ES	4 / 4	1	143			:
Lead	Tekno	4313	MA_Trance Lead5 _ES	4 / 4	2	143			:
Lead	Tekno	4314	MA_Psyche Lead1 _ES	4 / 4	1	143			:
Lead	Tekno	4315	MA_Psyche Lead2 _ES	4 / 4	1	143			:
Lead	Tekno	4316	MA_Psyche Lead3 _ES	4 / 4	1	143			:
Lead	Tekno	4317	MA_Psyche Lead4 _ES	4 / 4	2	143			:
Lead	Tekno	4318	MA_Psyche Lead5 _ES	4 / 4	2	143			:
Lead	D&B	4319	MA_Big Beat 2 _ES	4 / 4	4	145			:
Lead	D&B	4320	MB_Big Beat 2 _ES	4 / 4	8	145			:
Lead	D&B	4321	MC_Big Beat 2 _ES	4 / 4	4	145			:
Lead	D&B	4322	FA_Big Beat 2 _ES	4 / 4	1	145			:
Lead	D&B	4323	FB_Big Beat 2 _ES	4 / 4	1	145			:
Lead	D&B	4324	FC_Big Beat 2 _ES	4 / 4	1	145			:
Lead	D&B	4325	BA_Big Beat 2 _ES	4 / 4	2	145			:
Lead	Genrl	4326	MA_Needlz	4 / 4	2	132			:
Lead	Genrl	4327	MA_Pretzel	4 / 4	1	120			:
Lead	Genrl	4328	MA_DitDot	4 / 4	2	145			:
Lead	Genrl	4329	MA_CurlyQ	4 / 4	1	145			:
Lead	Genrl	4330	MA_Sproingo	4 / 4	2	120			:
Lead	Genrl	4331	MA_Bouncy	4 / 4	1	138			:
PdMe	Rock	4332	MA_16BeatBasic2 _XS	4 / 4	4	77			Synth Pad
PdMe	Rock	4333	MB_16BeatBasic2 _XS	4 / 4	4	77			:
PdMe	Rock	4334	MC_16BeatBasic2 _XS	4 / 4	4	77			:
PdMe	Rock	4335	FA_16BeatBasic2 _XS	4 / 4	1	77			:
PdMe	Rock	4336	FB_16BeatBasic2 _XS	4 / 4	1	77			:
PdMe	Rock	4337	FC_16BeatBasic2 _XS	4 / 4	1	77			:
PdMe	Rock	4338	BA_16BeatBasic2 _XS	4 / 4	1	77			:
PdMe	Rock	4339	MA_16BeatBasic2 _ES	4 / 4	4	77			:
PdMe	Rock	4340	MB_16BeatBasic2 _ES	4 / 4	4	77			:
PdMe	Rock	4341	MC_16BeatBasic2 _ES	4 / 4	4	77			:
PdMe	Rock	4342	FA_16BeatBasic2 _ES	4 / 4	1	77			:
PdMe	Rock	4343	FB_16BeatBasic2 _ES	4 / 4	1	77			:
PdMe	Rock	4344	FC_16BeatBasic2 _ES	4 / 4	1	77			:
PdMe	Rock	4345	BA_16BeatBasic2 _ES	4 / 4	1	77			:
PdMe	Rock	4346	MA_16Beat Rock _XS	4 / 4	4	86			:
PdMe	Rock	4347	MB_16Beat Rock _XS	4 / 4	4	86			:
PdMe	Rock	4348	MC_16Beat Rock _XS	4 / 4	4	86			:
PdMe	Rock	4349	FA_16Beat Rock _XS	4 / 4	1	86			:
PdMe	Rock	4350	FB_16Beat Rock _XS	4 / 4	1	86			:
PdMe	Rock	4351	FC_16Beat Rock _XS	4 / 4	1	86			:
PdMe	Rock	4352	BA_16Beat Rock _XS	4 / 4	1	86			:
PdMe	Rock	4353	MA_16Beat Rock _ES	4 / 4	4	86			:
PdMe	Rock	4354	MB_16Beat Rock _ES	4 / 4	4	86			:
PdMe	Rock	4355	MC_16Beat Rock _ES	4 / 4	4	86			:
PdMe	Rock	4356	FA_16Beat Rock _ES	4 / 4	1	86			:
PdMe	Rock	4357	FB_16Beat Rock _ES	4 / 4	1	86			:
PdMe	Rock	4358	FC_16Beat Rock _ES	4 / 4	1	86			:
PdMe	Rock	4359	BA_16Beat Rock _ES	4 / 4	1	86			:
PdMe	PopRk	4360	MA_16Beat Pop 1 _XS	4 / 4	4	103			:
PdMe	PopRk	4361	MB_16Beat Pop 1 _XS	4 / 4	4	103			:
PdMe	PopRk	4362	MC_16Beat Pop 1 _XS	4 / 4	4	103			:
PdMe	PopRk	4363	FA_16Beat Pop 1 _XS	4 / 4	1	103			:
PdMe	PopRk	4364	FB_16Beat Pop 1 _XS	4 / 4	1	103			:
PdMe	PopRk	4365	FC_16Beat Pop 1 _XS	4 / 4	1	103			:
PdMe	PopRk	4366	BA_16Beat Pop 1 _XS	4 / 4	1	103			:
PdMe	PopRk	4367	MA_16Beat Pop 1 _ES	4 / 4	4	103			:
PdMe	PopRk	4368	MB_16Beat Pop 1 _ES	4 / 4	4	103			:
PdMe	PopRk	4369	MC_16Beat Pop 1 _ES	4 / 4	4	103			:
PdMe	PopRk	4370	FA_16Beat Pop 1 _ES	4 / 4	1	103			:
PdMe	PopRk	4371	FB_16Beat Pop 1 _ES	4 / 4	1	103			:
PdMe	PopRk	4372	FC_16Beat Pop 1 _ES	4 / 4	1	103			:
PdMe	PopRk	4373	BA_16Beat Pop 1 _ES	4 / 4	1	103			:
PdMe	PopRk	4374	MA_16Beat Pop 2 _XS	4 / 4	4	94			:
PdMe	PopRk	4375	MB_16Beat Pop 2 _XS	4 / 4	4	94			:
PdMe	PopRk	4376	MC_16Beat Pop 2 _XS	4 / 4	4	94			:
PdMe	PopRk	4377	FA_16Beat Pop 2 _XS	4 / 4	1	94			:
PdMe	PopRk	4378	FB_16Beat Pop 2 _XS	4 / 4	1	94			:
PdMe	PopRk	4379	FC_16Beat Pop 2 _XS	4 / 4	1	94			:
PdMe	PopRk	4380	BA_16Beat Pop 2 _XS	4 / 4	1	94			:
PdMe	PopRk	4381	MA_16Beat Pop 2 _ES	4 / 4	4	94			:
PdMe	PopRk	4382	MB_16Beat Pop 2 _ES	4 / 4	4	94			:
PdMe	PopRk	4383	MC_16Beat Pop 2 _ES	4 / 4	4	94			:
PdMe	PopRk	4384	FA_16Beat Pop 2 _ES	4 / 4	1	94			:
PdMe	PopRk	4385	FB_16Beat Pop 2 _ES	4 / 4	1	94			:
PdMe	PopRk	4386	FC_16Beat Pop 2 _ES	4 / 4	1	94			:
PdMe	PopRk	4387	BA_16Beat Pop 2 _ES	4 / 4	1	94			:
PdMe	PopRk	4388	MC_Analog Pop	4 / 4	1	93			:
PdMe	PopRk	4389	MD_Analog Pop	4 / 4	1	93			:
PdMe	HipHp	4390	IA_Hip Hop 2	4 / 4	1	94			Hit
PdMe	HipHp	4391	FC_Hip Hop 2 _ES	4 / 4	2	94			:
PdMe	R&B-M	4392	MA_Pop Shuffle2 _XS	4 / 4	4	80			Synth Pad
PdMe	R&B-M	4393	MB_Pop Shuffle2 _XS	4 / 4	4	80			:

Main Category	Sub Category	ARP No.	ARP Name	Time Signature	Length	Original Tempo	Accent	Random SFX	Voice Type
PdMe	R&B-M	4394	MC_Pop Shuffle2 _XS	4 / 4	4	80			Synth Pad
PdMe	R&B-M	4395	FA_Pop Shuffle2 _XS	4 / 4	1	80			:
PdMe	R&B-M	4396	FB_Pop Shuffle2 _XS	4 / 4	1	80			:
PdMe	R&B-M	4397	FC_Pop Shuffle2 _XS	4 / 4	1	80			:
PdMe	R&B-M	4398	BA_Pop Shuffle2 _XS	4 / 4	1	80			:
PdMe	R&B-M	4399	MA_Pop Shuffle2 _ES	4 / 4	4	80			:
PdMe	R&B-M	4400	MB_Pop Shuffle2 _ES	4 / 4	4	80			:
PdMe	R&B-M	4401	MC_Pop Shuffle2 _ES	4 / 4	4	80			:
PdMe	R&B-M	4402	FA_Pop Shuffle2 _ES	4 / 4	1	80			:
PdMe	R&B-M	4403	FB_Pop Shuffle2 _ES	4 / 4	1	80			:
PdMe	R&B-M	4404	FC_Pop Shuffle2 _ES	4 / 4	1	80			:
PdMe	R&B-M	4405	BA_Pop Shuffle2 _ES	4 / 4	1	80			:
PdMe	R&B-M	4406	MA_Chart R&B _XS	4 / 4	4	130			:
PdMe	R&B-M	4407	MB_Chart R&B _XS	4 / 4	4	130			:
PdMe	R&B-M	4408	MC_Chart R&B _XS	4 / 4	4	130			:
PdMe	R&B-M	4409	FA_Chart R&B _XS	4 / 4	1	130			:
PdMe	R&B-M	4410	FB_Chart R&B _XS	4 / 4	1	130			:
PdMe	R&B-M	4411	FC_Chart R&B _XS	4 / 4	1	130			:
PdMe	R&B-M	4412	BA_Chart R&B _XS	4 / 4	1	130			:
PdMe	R&B-M	4413	EA_Chart R&B _XS	4 / 4	5	130			:
PdMe	R&B-M	4414	EB_Chart R&B _XS	4 / 4	10	130			:
PdMe	R&B-M	4415	MA_J-R&B Pop _XS	4 / 4	4	100			Hit
PdMe	R&B-M	4416	MB_J-R&B Pop _XS	4 / 4	4	100			:
PdMe	R&B-M	4417	MC_J-R&B Pop _XS	4 / 4	4	100			:
PdMe	R&B-M	4418	FA_J-R&B Pop _XS	4 / 4	1	100			:
PdMe	R&B-M	4419	FC_J-R&B Pop _XS	4 / 4	1	100			:
PdMe	R&B-M	4420	BA_J-R&B Pop _XS	4 / 4	1	100			:
PdMe	R&B-M	4421	MD_Smooth 1	4 / 4	2	115			Synth Pad
PdMe	R&B-M	4422	FC_Smooth 1	4 / 4	2	115			:
PdMe	Tekno	4423	MA1_Techno 1 _ES	4 / 4	4	135			:
PdMe	Tekno	4424	MB1_Techno 1 _ES	4 / 4	8	135			:
PdMe	Tekno	4425	MC1_Techno 1 _ES	4 / 4	8	135			:
PdMe	Tekno	4426	FA1_Techno 1 _ES	4 / 4	1	135			:
PdMe	Tekno	4427	FB1_Techno 1 _ES	4 / 4	1	135			:
PdMe	Tekno	4428	BA1_Techno 1 _ES	4 / 4	4	135			:
PdMe	Tekno	4429	MC2_Techno 1 _ES	4 / 4	8	135			:
PdMe	Chill	4430	MA_Ambient 5	4 / 4	4	112			:
PdMe	Chill	4431	MA_Ambient 5 AF1	4 / 4	4	112			:
PdMe	Chill	4432	MA_Ambient 5 AF1&2	4 / 4	4	112			:
PdMe	Genrl	4433	MA_Cycle1	4 / 4	3	120			:
PdMe	Genrl	4434	MA_Cycle2	4 / 4	6	120			:
PdMe	Genrl	4435	MA_Cycle3 _ES	4 / 4	14	118			:
PdMe	Genrl	4436	MA_Ripples _ES	4 / 4	4	82			:
PdMe	Genrl	4437	MA_PulsPad	4 / 4	4	120			:
CPrc	R&B-M	4438	FB_R&B Disco _ES	4 / 4	1	110			Chromatic Perc.
CPrc	R&B-M	4439	FC_R&B Disco _ES	4 / 4	2	110			:
CPrc	Tekno	4440	MC_Trance 5	4 / 4	4	140			:
CPrc	World	4441	MA_Ethnic1	6 / 4	5	118			:
CPrc	World	4442	MA_Ethnic2	7 / 4	3	120			:
CPrc	Genrl	4443	MA_Synth Bell _ES	4 / 4	2	90			:
CPrc	Genrl	4444	MB_Synth Bell _ES	4 / 4	4	90			:
CPrc	Genrl	4445	MC_Synth Bell _ES	4 / 4	2	90			:
CPrc	Genrl	4446	MD_Synth Bell _ES	4 / 4	4	90			:
CPrc	Genrl	4447	ME_Synth Bell _ES	4 / 4	4	90			:
CPrc	Genrl	4448	EA_Synth Bell _ES	4 / 4	4	90			:
CPrc	Genrl	4449	MA_Tubular Bell _ES	4 / 4	2	100			Tubular Bell
CPrc	Genrl	4450	MB_Tubular Bell _ES	4 / 4	2	100			:
CPrc	Genrl	4451	MC_Tubular Bell _ES	4 / 4	4	100			:
CPrc	Genrl	4452	MD_Tubular Bell _ES	4 / 4	2	100			:
CPrc	Genrl	4453	ME_Tubular Bell _ES	4 / 4	1	100			:
CPrc	Genrl	4454	MA_Real Timpani _ES	4 / 4	2	120			"Real Timpani AF2 Mfl"
CPrc	Genrl	4455	MB_Real Timpani _ES	4 / 4	2	120			:
CPrc	Genrl	4456	MC_Real Timpani _ES	4 / 4	3	120			:
CPrc	Genrl	4457	MD_Real Timpani _ES	4 / 4	1	120			:
CPrc	Genrl	4458	ME_Real Timpani _ES	4 / 4	3	120			:
CPrc	Genrl	4459	MF_Real Timpani _ES	4 / 4	6	120			:
CPrc	Genrl	4460	MA_RealTimpan AF2_ES	4 / 4	2	110			:
CPrc	Genrl	4461	MB_RealTimpan AF2_ES	4 / 4	1	110			:
CPrc	Genrl	4462	MC_RealTimpan AF2_ES	4 / 4	2	110			:
CPrc	Genrl	4463	MD_RealTimpan AF2_ES	4 / 4	2	110			:
CPrc	Genrl	4464	ME_RealTimpan AF2_ES	4 / 4	2	110			:
CPrc	Genrl	4465	Timpani Roll _ES	4 / 4	1	102			Timpani
CPrc	Genrl	4466	Mallet Roll1	4 / 4	2	120			Chromatic Perc.
CPrc	Genrl	4467	Mallet Roll2	4 / 4	2	120			:
CPrc	Genrl	4468	MOD1	4 / 4	1	120			:
CPrc	Genrl	4469	MOD2	4 / 4	2	120			:
CPrc	Genrl	4470	MOD3	4 / 4	1	120			:
CPrc	Genrl	4471	Trill 1	4 / 4	1	120			:
CPrc	Genrl	4472	Trill 2	4 / 4	2	120			:
CPrc	Genrl	4473	Trill 3	4 / 4	2	120			:
CPrc	Genrl	4474	Steel Drum1	4 / 4	1	160			Steel Drum
CPrc	Genrl	4475	Steel Drum2	4 / 4	2	95			:
CPrc	Genrl	4476	Bell Tree1	4 / 4	3	120			Chromatic Perc.

Main Category	Sub Category	ARP No.	ARP Name	Time Signature	Length	Original Tempo	Accent	Random SFX	Voice Type
CPrc	Genrl	4477	Bell Tree2	4 / 4	3	120			Chromatic Perc.
CPrc	Genrl	4478	Cresendo	4 / 4	1	120			:
DrPc	Rock	4479	MA_StandardRock	4 / 4	4	131	●		"Power Standard Kit 2"
DrPc	Rock	4480	MB_StandardRock	4 / 4	4	131	●		:
DrPc	Rock	4481	MC_StandardRock	4 / 4	4	131	●		:
DrPc	Rock	4482	FA_StandardRock	4 / 4	1	131	●		:
DrPc	Rock	4483	FB_StandardRock	4 / 4	1	131	●		:
DrPc	Rock	4484	FC_StandardRock	4 / 4	1	131	●		:
DrPc	Rock	4485	BA_StandardRock	4 / 4	1	131	●		:
DrPc	Rock	4486	EA_StandardRock	4 / 4	4	131	●		:
DrPc	Rock	4487	EB_StandardRock	4 / 4	6	131	●		:
DrPc	Rock	4488	MA_Power Rock	4 / 4	4	120	●		"Power Standard Kit 1"
DrPc	Rock	4489	MB_Power Rock	4 / 4	4	120	●		:
DrPc	Rock	4490	MC_Power Rock	4 / 4	4	120	●		:
DrPc	Rock	4491	FA_Power Rock	4 / 4	1	120	●		:
DrPc	Rock	4492	FB_Power Rock	4 / 4	1	120	●		:
DrPc	Rock	4493	FC_Power Rock	4 / 4	1	120	●		:
DrPc	Rock	4494	BA_Power Rock	4 / 4	1	120	●		:
DrPc	Rock	4495	EA_Power Rock	4 / 4	4	120	●		:
DrPc	Rock	4496	EB_Power Rock	4 / 4	7	120	●		:
DrPc	Rock	4497	MA_ContempRock	4 / 4	4	126	●		"Power Standard Kit 2"
DrPc	Rock	4498	MB_ContempRock	4 / 4	4	126	●		:
DrPc	Rock	4499	MC_ContempRock	4 / 4	4	126	●		:
DrPc	Rock	4500	FA_ContempRock	4 / 4	1	126	●		:
DrPc	Rock	4501	FB_ContempRock	4 / 4	1	126	●		:
DrPc	Rock	4502	FC_ContempRock	4 / 4	1	126	●		:
DrPc	Rock	4503	BA_ContempRock	4 / 4	1	126	●		:
DrPc	Rock	4504	EA_ContempRock	4 / 4	4	126	●		:
DrPc	Rock	4505	EB_ContempRock	4 / 4	4	126	●		:
DrPc	Rock	4506	MA_Hard Rock	4 / 4	4	120	●		"Power Standard Kit 1"
DrPc	Rock	4507	MB_Hard Rock	4 / 4	4	120	●		:
DrPc	Rock	4508	MC_Hard Rock	4 / 4	4	120	●		:
DrPc	Rock	4509	FA_Hard Rock	4 / 4	1	120	●		:
DrPc	Rock	4510	FB_Hard Rock	4 / 4	1	120	●		:
DrPc	Rock	4511	FC_Hard Rock	4 / 4	1	120	●		:
DrPc	Rock	4512	BA_Hard Rock	4 / 4	1	120	●		:
DrPc	Rock	4513	EA_Hard Rock	4 / 4	3	120	●		:
DrPc	Rock	4514	EB_Hard Rock	4 / 4	6	120	●		:
DrPc	Rock	4515	MA_70s Rock	4 / 4	4	130	●		"Dry Standard Kit"
DrPc	Rock	4516	MB_70s Rock	4 / 4	4	130	●		:
DrPc	Rock	4517	MC_70s Rock	4 / 4	4	130	●		:
DrPc	Rock	4518	MD_70s Rock	4 / 4	4	130	●		:
DrPc	Rock	4519	IA_70s Rock	4 / 4	1	130	●		:
DrPc	Rock	4520	FA_70s Rock	4 / 4	1	130	●		:
DrPc	Rock	4521	FB_70s Rock	4 / 4	1	130	●		:
DrPc	Rock	4522	FC_70s Rock	4 / 4	2	130	●		:
DrPc	Rock	4523	MA_Blues Rock	4 / 4	4	120	●		"Power Standard Kit 1"
DrPc	Rock	4524	MB_Blues Rock	4 / 4	4	120	●		:
DrPc	Rock	4525	MC_Blues Rock	4 / 4	4	120	●		:
DrPc	Rock	4526	FA_Blues Rock	4 / 4	1	120	●		:
DrPc	Rock	4527	FB_Blues Rock	4 / 4	1	120	●		:
DrPc	Rock	4528	FC_Blues Rock	4 / 4	1	120	●		:
DrPc	Rock	4529	BA_Blues Rock	4 / 4	1	120	●		:
DrPc	Rock	4530	EA_Blues Rock	4 / 4	3	120	●		:
DrPc	Rock	4531	EB_Blues Rock	4 / 4	5	120	●		:
DrPc	Rock	4532	MA_RockShuffle	4 / 4	4	121	●		"Power Standard Kit 2"
DrPc	Rock	4533	MB_RockShuffle	4 / 4	4	121	●		:
DrPc	Rock	4534	MC_RockShuffle	4 / 4	4	121	●		:
DrPc	Rock	4535	FA_RockShuffle	4 / 4	1	121	●		:
DrPc	Rock	4536	FB_RockShuffle	4 / 4	1	121	●		:
DrPc	Rock	4537	FC_RockShuffle	4 / 4	1	121	●		:
DrPc	Rock	4538	BA_RockShuffle	4 / 4	1	121	●		:
DrPc	Rock	4539	EA_RockShuffle	4 / 4	6	121	●		:
DrPc	Rock	4540	MA_Rock & Roll	4 / 4	4	172	●		:
DrPc	Rock	4541	MB_Rock & Roll	4 / 4	4	172	●		:
DrPc	Rock	4542	MC_Rock & Roll	4 / 4	4	172	●		:
DrPc	Rock	4543	FA_Rock & Roll	4 / 4	1	172	●		:
DrPc	Rock	4544	FB_Rock & Roll	4 / 4	1	172	●		:
DrPc	Rock	4545	FC_Rock & Roll	4 / 4	1	172	●		:
DrPc	Rock	4546	BA_Rock & Roll	4 / 4	1	172	●		:
DrPc	Rock	4547	EA_Rock & Roll	4 / 4	5	172	●		:
DrPc	Rock	4548	EB_Rock & Roll	4 / 4	6	172	●		:
DrPc	Rock	4549	MA1_AlternaRock1	4 / 4	4	97	●		"Modern Rock Kit"
DrPc	Rock	4550	MB1_AlternaRock1	4 / 4	4	97	●		:
DrPc	Rock	4551	MC1_AlternaRock1	4 / 4	4	97	●		:
DrPc	Rock	4552	FA1_AlternaRock1	4 / 4	1	97	●		:
DrPc	Rock	4553	FB1_AlternaRock1	4 / 4	1	97	●		:
DrPc	Rock	4554	FC1_AlternaRock1	4 / 4	1	97	●		:
DrPc	Rock	4555	BA1_AlternaRock1	4 / 4	1	97	●		:
DrPc	Rock	4556	MA2_8Z Alterna1	4 / 4	4	97	●		"8Z Romps"
DrPc	Rock	4557	MB2_8Z Alterna1	4 / 4	4	97	●		:
DrPc	Rock	4558	MC2_8Z Alterna1	4 / 4	4	97	●		:
DrPc	Rock	4559	FA2_8Z Alterna1	4 / 4	1	97	●		:

Main Category	Sub Category	ARP No.	ARP Name	Time Signature	Length	Original Tempo	Accent	Random SFX	Voice Type
DrPc	Rock	4560	FB2_8Z Alterna1	4 / 4	1	97	●		"8Z Romps"
DrPc	Rock	4561	FC2_8Z Alterna1	4 / 4	1	97	●		:
DrPc	Rock	4562	BA2_8Z Alterna1	4 / 4	1	97	●		:
DrPc	Rock	4563	MA_AlternaRock2	4 / 4	4	100	●		"Rock Stereo Kit 2"
DrPc	Rock	4564	MB_AlternaRock2	4 / 4	4	100	●		:
DrPc	Rock	4565	MC_AlternaRock2	4 / 4	4	100	●		:
DrPc	Rock	4566	FA_AlternaRock2	4 / 4	1	100	●		:
DrPc	Rock	4567	FB_AlternaRock2	4 / 4	1	100	●		:
DrPc	Rock	4568	FC_AlternaRock2	4 / 4	1	100	●		:
DrPc	Rock	4569	BA_AlternaRock2	4 / 4	2	100	●		:
DrPc	Rock	4570	MA_Mondo Rock	4 / 4	2	94	●		:
DrPc	Rock	4571	MB_Mondo Rock	4 / 4	2	94	●		:
DrPc	Rock	4572	MC_Mondo Rock	4 / 4	2	94	●		:
DrPc	Rock	4573	MD_Mondo Rock	4 / 4	4	94	●		:
DrPc	Rock	4574	MA1_Xover Rock	4 / 4	2	100	●		"Rock Stereo Kit 1"
DrPc	Rock	4575	MB1_Xover Rock	4 / 4	1	100	●		:
DrPc	Rock	4576	MC1_Xover Rock	4 / 4	2	100	●		:
DrPc	Rock	4577	MD1_Xover Rock	4 / 4	2	100	●		:
DrPc	Rock	4578	IA1_Xover Rock	4 / 4	2	100	●		:
DrPc	Rock	4579	FA1_Xover Rock	4 / 4	1	100	●		:
DrPc	Rock	4580	FB1_Xover Rock	4 / 4	1	100	●		:
DrPc	Rock	4581	FC1_Xover Rock	4 / 4	2	100	●		:
DrPc	Rock	4582	FA2_Xover Rock	4 / 4	1	100	●		"Scratches"
DrPc	Rock	4583	FC2_Xover Rock	4 / 4	1	100	●		:
DrPc	Rock	4584	MA_8Beat Rock	4 / 4	4	75	●		"Power Standard Kit 2"
DrPc	Rock	4585	MB_8Beat Rock	4 / 4	4	75	●		:
DrPc	Rock	4586	MC_8Beat Rock	4 / 4	4	75	●		:
DrPc	Rock	4587	FA_8Beat Rock	4 / 4	1	75	●		:
DrPc	Rock	4588	FB_8Beat Rock	4 / 4	1	75	●		:
DrPc	Rock	4589	FC_8Beat Rock	4 / 4	1	75	●		:
DrPc	Rock	4590	BA_8Beat Rock	4 / 4	1	75	●		:
DrPc	Rock	4591	MA_16Beat Rock	4 / 4	4	86	●		"Rock Stereo Kit 2"
DrPc	Rock	4592	MB_16Beat Rock	4 / 4	4	86	●		:
DrPc	Rock	4593	MC_16Beat Rock	4 / 4	4	86	●		:
DrPc	Rock	4594	FA_16Beat Rock	4 / 4	1	86	●		:
DrPc	Rock	4595	FB_16Beat Rock	4 / 4	1	86	●		:
DrPc	Rock	4596	FC_16Beat Rock	4 / 4	1	86	●		:
DrPc	Rock	4597	BA_16Beat Rock	4 / 4	1	86	●		:
DrPc	Rock	4598	MA_ProgresRock1	4 / 4	4	110	●		"Modern Rock Kit"
DrPc	Rock	4599	MB_ProgresRock1	4 / 4	3	110	●		:
DrPc	Rock	4600	MC_ProgresRock1	4 / 4	4	110	●		:
DrPc	Rock	4601	FA_ProgresRock1	4 / 4	1	110	●		:
DrPc	Rock	4602	FB_ProgresRock1	4 / 4	1	110	●		:
DrPc	Rock	4603	FC_ProgresRock1	4 / 4	1	110	●		:
DrPc	Rock	4604	BA_ProgresRock1	4 / 4	1	110	●		:
DrPc	Rock	4605	MA_ProgresRock2	4 / 4	4	120	●		"Power Standard Kit 2"
DrPc	Rock	4606	MB_ProgresRock2	4 / 4	4	120	●		:
DrPc	Rock	4607	MC_ProgresRock2	4 / 4	4	120	●		:
DrPc	Rock	4608	FA_ProgresRock2	4 / 4	1	120	●		:
DrPc	Rock	4609	FB_ProgresRock2	4 / 4	1	120	●		:
DrPc	Rock	4610	FC_ProgresRock2	4 / 4	1	120	●		:
DrPc	Rock	4611	BA_ProgresRock2	4 / 4	1	120	●		:
DrPc	Rock	4612	MA_Maple Custom	4 / 4	4	150	●		"MapleCustom Kit"
DrPc	Rock	4613	MB_Maple Custom	4 / 4	2	150	●		:
DrPc	Rock	4614	MC_Maple Custom	4 / 4	4	150	●		:
DrPc	Rock	4615	MD_Maple Custom	4 / 4	4	150	●		:
DrPc	Rock	4616	FA_Maple Custom	4 / 4	2	150	●		:
DrPc	Rock	4617	BA_Maple Custom	4 / 4	2	150	●		:
DrPc	Rock	4618	EA_Maple Custom	4 / 4	7	150	●		:
DrPc	PopRk	4619	MA_Pop Rock 1	4 / 4	2	120	●		"Rock Stereo Kit 2"
DrPc	PopRk	4620	MB_Pop Rock 1	4 / 4	2	120	●		:
DrPc	PopRk	4621	MC_Pop Rock 1	4 / 4	2	120	●		:
DrPc	PopRk	4622	MD_Pop Rock 1	4 / 4	2	120	●		:
DrPc	PopRk	4623	MA_Pop Rock 2	4 / 4	2	126	●		"Rock Stereo Kit 1"
DrPc	PopRk	4624	MB_Pop Rock 2	4 / 4	2	126	●		:
DrPc	PopRk	4625	MC_Pop Rock 2	4 / 4	2	126	●		:
DrPc	PopRk	4626	MD_Pop Rock 2	4 / 4	2	126	●		:
DrPc	PopRk	4627	MA_Pop Rock 3	4 / 4	2	120	●		"Rock Stereo Kit 2"
DrPc	PopRk	4628	MA_Pop Rock 4	4 / 4	2	115	●		:
DrPc	PopRk	4629	MA_Guitar Pop 1	4 / 4	4	100	●		"Power Standard Kit 1"
DrPc	PopRk	4630	MB_Guitar Pop 1	4 / 4	4	100	●		:
DrPc	PopRk	4631	MC_Guitar Pop 1	4 / 4	4	100	●		:
DrPc	PopRk	4632	FA_Guitar Pop 1	4 / 4	1	100	●		:
DrPc	PopRk	4633	FB_Guitar Pop 1	4 / 4	1	100	●		:
DrPc	PopRk	4634	FC_Guitar Pop 1	4 / 4	1	100	●		:
DrPc	PopRk	4635	BA_Guitar Pop 1	4 / 4	1	100	●		:
DrPc	PopRk	4636	EA_Guitar Pop 1	4 / 4	3	100	●		:
DrPc	PopRk	4637	EB_Guitar Pop 1	4 / 4	3	100	●		:
DrPc	PopRk	4638	MA1_Guitar Pop 2	4 / 4	2	90	●		"Dry Standard Kit"
DrPc	PopRk	4639	MB1_Guitar Pop 2	4 / 4	1	90	●		:
DrPc	PopRk	4640	MC1_Guitar Pop 2	4 / 4	2	90	●		:
DrPc	PopRk	4641	MD1_Guitar Pop 2	4 / 4	2	90	●		:
DrPc	PopRk	4642	IA1_Guitar Pop 2	4 / 4	2	90	●		:

Main Category	Sub Category	ARP No.	ARP Name	Time Signature	Length	Original Tempo	Accent	Random SFX	Voice Type
DrPc	PopRk	4643	FA1_Guitar Pop 2	4 / 4	1	90	●		"Dry Standard Kit"
DrPc	PopRk	4644	FB1_Guitar Pop 2	4 / 4	1	90	●		:
DrPc	PopRk	4645	FC1_Guitar Pop 2	4 / 4	2	90	●		:
DrPc	PopRk	4646	MC2_Guitar Pop 2	4 / 4	2	90	●		"Latin Percussion Kit"
DrPc	PopRk	4647	MD2_Guitar Pop 2	4 / 4	2	90	●		:
DrPc	PopRk	4648	FA2_Guitar Pop 2	4 / 4	1	90	●		:
DrPc	PopRk	4649	FC2_Guitar Pop 2	4 / 4	2	90	●		:
DrPc	PopRk	4650	MA_Acoustic Pop	4 / 4	4	110	●		"Chill Out Kit"
DrPc	PopRk	4651	MB_Acoustic Pop	4 / 4	4	110	●		:
DrPc	PopRk	4652	MC_Acoustic Pop	4 / 4	4	110	●		:
DrPc	PopRk	4653	FA_Acoustic Pop	4 / 4	1	110	●		:
DrPc	PopRk	4654	FB_Acoustic Pop	4 / 4	1	110	●		:
DrPc	PopRk	4655	FC_Acoustic Pop	4 / 4	1	110	●		:
DrPc	PopRk	4656	BA_Acoustic Pop	4 / 4	1	110	●		:
DrPc	PopRk	4657	MA_FingerPickin	4 / 4	4	94	●		"Dry Standard Kit"
DrPc	PopRk	4658	MB_FingerPickin	4 / 4	4	94	●		:
DrPc	PopRk	4659	MC_FingerPickin	4 / 4	4	94	●		:
DrPc	PopRk	4660	MD_FingerPickin	4 / 4	4	94	●		:
DrPc	PopRk	4661	IA_FingerPickin/a	4 / 4	1	94	●		:
DrPc	PopRk	4662	IA_FingerPickin/b	4 / 4	1	94	●		:
DrPc	PopRk	4663	FA_FingerPickin	4 / 4	1	94	●		:
DrPc	PopRk	4664	FB_FingerPickin	4 / 4	1	94	●		:
DrPc	PopRk	4665	FC_FingerPickin	4 / 4	1	94	●		:
DrPc	PopRk	4666	MA_Folk Rock	4 / 4	1	120	●		:
DrPc	PopRk	4667	MB_Folk Rock/1	4 / 4	4	120	●		:
DrPc	PopRk	4668	MD_Folk Rock	4 / 4	1	120	●		:
DrPc	PopRk	4669	IA_Folk Rock	4 / 4	1	120	●		:
DrPc	PopRk	4670	FA_Folk Rock	4 / 4	1	120	●		:
DrPc	PopRk	4671	FB_Folk Rock	4 / 4	1	120	●		:
DrPc	PopRk	4672	FC_Folk Rock	4 / 4	1	120	●		:
DrPc	PopRk	4673	MB_Folk Rock/2	4 / 4	1	120	●		:
DrPc	PopRk	4674	MA_Worship Slow	4 / 4	4	75	●		"Power Standard Kit 1"
DrPc	PopRk	4675	MB_Worship Slow	4 / 4	4	75	●		:
DrPc	PopRk	4676	MC_Worship Slow	4 / 4	4	75	●		:
DrPc	PopRk	4677	FA_Worship Slow	4 / 4	1	75	●		:
DrPc	PopRk	4678	FB_Worship Slow	4 / 4	1	75	●		:
DrPc	PopRk	4679	FC_Worship Slow	4 / 4	1	75	●		:
DrPc	PopRk	4680	BA_Worship Slow	4 / 4	1	75	●		:
DrPc	PopRk	4681	EA_Worship Slow	4 / 4	4	75	●		:
DrPc	PopRk	4682	EB_Worship Slow	4 / 4	4	75	●		:
DrPc	PopRk	4683	MA_Worship Med	4 / 4	8	140	●		"Brush Kit"
DrPc	PopRk	4684	MB_Worship Med	4 / 4	4	140	●		:
DrPc	PopRk	4685	MC_Worship Med	4 / 4	4	140	●		:
DrPc	PopRk	4686	FA_Worship Med	4 / 4	1	140	●		:
DrPc	PopRk	4687	FB_Worship Med	4 / 4	1	140	●		:
DrPc	PopRk	4688	FC_Worship Med	4 / 4	1	140	●		:
DrPc	PopRk	4689	BA_Worship Med	4 / 4	1	140	●		:
DrPc	PopRk	4690	EA_Worship Med	4 / 4	4	140	●		:
DrPc	PopRk	4691	EB_Worship Med	4 / 4	4	140	●		:
DrPc	PopRk	4692	MA_Worship Fast	4 / 4	8	114	●		"Power Standard Kit 2"
DrPc	PopRk	4693	MB_Worship Fast	4 / 4	4	114	●		:
DrPc	PopRk	4694	MC_Worship Fast	4 / 4	4	114	●		:
DrPc	PopRk	4695	FA_Worship Fast	4 / 4	1	114	●		:
DrPc	PopRk	4696	FB_Worship Fast	4 / 4	1	114	●		:
DrPc	PopRk	4697	FC_Worship Fast	4 / 4	1	114	●		:
DrPc	PopRk	4698	BA_Worship Fast	4 / 4	1	114	●		:
DrPc	PopRk	4699	EA_Worship Fast	4 / 4	4	114	●		:
DrPc	PopRk	4700	EB_Worship Fast	4 / 4	2	114	●		:
DrPc	PopRk	4701	MA_New Country	4 / 4	2	118	●		"Power Standard Kit 1"
DrPc	PopRk	4702	MB_New Country	4 / 4	4	118	●		:
DrPc	PopRk	4703	MC_New Country	4 / 4	2	118	●		:
DrPc	PopRk	4704	FA_New Country	4 / 4	1	118	●		:
DrPc	PopRk	4705	FB_New Country	4 / 4	1	118	●		:
DrPc	PopRk	4706	FC_New Country	4 / 4	1	118	●		:
DrPc	PopRk	4707	BA_New Country	4 / 4	1	118	●		:
DrPc	PopRk	4708	EA_New Country	4 / 4	4	118	●		:
DrPc	PopRk	4709	EB_New Country	4 / 4	4	118	●		:
DrPc	PopRk	4710	MA_VintageGtPop	4 / 4	4	148	●		:
DrPc	PopRk	4711	MB_VintageGtPop	4 / 4	4	148	●		:
DrPc	PopRk	4712	MC_VintageGtPop	4 / 4	4	148	●		:
DrPc	PopRk	4713	FA_VintageGtPop	4 / 4	1	148	●		:
DrPc	PopRk	4714	FB_VintageGtPop	4 / 4	1	148	●		:
DrPc	PopRk	4715	FC_VintageGtPop	4 / 4	1	148	●		:
DrPc	PopRk	4716	BA_VintageGtPop	4 / 4	1	148	●		:
DrPc	PopRk	4717	EA_VintageGtPop	4 / 4	4	148	●		:
DrPc	PopRk	4718	EB_VintageGtPop	4 / 4	4	148	●		:
DrPc	PopRk	4719	MA_WestCoastPop	4 / 4	4	100	●		:
DrPc	PopRk	4720	MB_WestCoastPop	4 / 4	4	100	●		:
DrPc	PopRk	4721	MC_WestCoastPop	4 / 4	4	100	●		:
DrPc	PopRk	4722	FA_WestCoastPop	4 / 4	1	100	●		:
DrPc	PopRk	4723	FB_WestCoastPop	4 / 4	1	100	●		:
DrPc	PopRk	4724	FC_WestCoastPop	4 / 4	1	100	●		:
DrPc	PopRk	4725	BA_WestCoastPop	4 / 4	1	100	●		:

Main Category	Sub Category	ARP No.	ARP Name	Time Signature	Length	Original Tempo	Accent	Random SFX	Voice Type
DrPc	PopRk	4726	EA_WestCoastPop	4 / 4	4	100	●		"Power Standard Kit 1"
DrPc	PopRk	4727	EB_WestCoastPop	4 / 4	4	100	●		:
DrPc	PopRk	4728	MA_Brit Pop	4 / 4	2	86	●		"Brush Kit"
DrPc	PopRk	4729	MB_Brit Pop	4 / 4	2	86	●		:
DrPc	PopRk	4730	MC_Brit Pop	4 / 4	2	86	●		:
DrPc	PopRk	4731	FA_Brit Pop	4 / 4	1	86	●		:
DrPc	PopRk	4732	FB_Brit Pop	4 / 4	1	86	●		:
DrPc	PopRk	4733	FC_Brit Pop	4 / 4	1	86	●		:
DrPc	PopRk	4734	BA_Brit Pop	4 / 4	1	86	●		:
DrPc	PopRk	4735	EA_Brit Pop	4 / 4	4	86	●		:
DrPc	PopRk	4736	EB_Brit Pop	4 / 4	4	86	●		:
DrPc	PopRk	4737	MA_BritPopSwing	4 / 4	2	110	●		"Power Standard Kit 1"
DrPc	PopRk	4738	MB_BritPopSwing	4 / 4	2	110	●		:
DrPc	PopRk	4739	MC_BritPopSwing	4 / 4	2	110	●		:
DrPc	PopRk	4740	FA_BritPopSwing	4 / 4	1	110	●		:
DrPc	PopRk	4741	FB_BritPopSwing	4 / 4	1	110	●		:
DrPc	PopRk	4742	FC_BritPopSwing	4 / 4	1	110	●		:
DrPc	PopRk	4743	BA_BritPopSwing	4 / 4	1	110	●		:
DrPc	PopRk	4744	EA_BritPopSwing	4 / 4	4	110	●		:
DrPc	PopRk	4745	EB_BritPopSwing	4 / 4	4	110	●		:
DrPc	PopRk	4746	MA_Cool 8Beat	4 / 4	2	100	●		:
DrPc	PopRk	4747	MB_Cool 8Beat	4 / 4	2	100	●		:
DrPc	PopRk	4748	MC_Cool 8Beat	4 / 4	2	100	●		:
DrPc	PopRk	4749	FA_Cool 8Beat	4 / 4	1	100	●		:
DrPc	PopRk	4750	FB_Cool 8Beat	4 / 4	1	100	●		:
DrPc	PopRk	4751	FC_Cool 8Beat	4 / 4	1	100	●		:
DrPc	PopRk	4752	BA_Cool 8Beat	4 / 4	1	100	●		:
DrPc	PopRk	4753	EA_Cool 8Beat	4 / 4	4	100	●		:
DrPc	PopRk	4754	EB_Cool 8Beat	4 / 4	4	100	●		:
DrPc	PopRk	4755	MA_8Beat Basic	4 / 4	4	120	●		:
DrPc	PopRk	4756	MB_8Beat Basic	4 / 4	4	120	●		:
DrPc	PopRk	4757	MC_8Beat Basic	4 / 4	4	120	●		:
DrPc	PopRk	4758	FA_8Beat Basic	4 / 4	1	120	●		:
DrPc	PopRk	4759	FB_8Beat Basic	4 / 4	1	120	●		:
DrPc	PopRk	4760	FC_8Beat Basic	4 / 4	1	120	●		:
DrPc	PopRk	4761	BA_8Beat Basic	4 / 4	1	120	●		:
DrPc	PopRk	4762	MA_8Beat Soft	4 / 4	4	100	●		:
DrPc	PopRk	4763	MB_8Beat Soft	4 / 4	4	100	●		:
DrPc	PopRk	4764	MC_8Beat Soft	4 / 4	4	100	●		:
DrPc	PopRk	4765	FA_8Beat Soft	4 / 4	1	100	●		:
DrPc	PopRk	4766	FB_8Beat Soft	4 / 4	1	100	●		:
DrPc	PopRk	4767	FC_8Beat Soft	4 / 4	1	100	●		:
DrPc	PopRk	4768	BA_8Beat Soft	4 / 4	1	100	●		:
DrPc	PopRk	4769	MA_Soft Rock	4 / 4	4	120	●		"Dry Standard Kit"
DrPc	PopRk	4770	MB_Soft Rock	4 / 4	4	120	●		:
DrPc	PopRk	4771	MC_Soft Rock	4 / 4	4	120	●		:
DrPc	PopRk	4772	MD_Soft Rock	4 / 4	4	120	●		:
DrPc	PopRk	4773	IA_Soft Rock	4 / 4	1	120	●		:
DrPc	PopRk	4774	FA_Soft Rock	4 / 4	1	120	●		:
DrPc	PopRk	4775	FB_Soft Rock	4 / 4	1	120	●		:
DrPc	PopRk	4776	FC_Soft Rock	4 / 4	1	120	●		:
DrPc	PopRk	4777	MA_BritRockPop	4 / 4	4	123	●		"Power Standard Kit 1"
DrPc	PopRk	4778	MB_BritRockPop	4 / 4	4	123	●		:
DrPc	PopRk	4779	MC_BritRockPop	4 / 4	4	123	●		:
DrPc	PopRk	4780	FA_BritRockPop	4 / 4	1	123	●		:
DrPc	PopRk	4781	FB_BritRockPop	4 / 4	1	123	●		:
DrPc	PopRk	4782	FC_BritRockPop	4 / 4	1	123	●		:
DrPc	PopRk	4783	BA_BritRockPop	4 / 4	1	123	●		:
DrPc	PopRk	4784	EA_BritRockPop	4 / 4	6	123	●		:
DrPc	PopRk	4785	MA_80'sPopRock	4 / 4	4	111	●		"Rock Stereo Kit 2"
DrPc	PopRk	4786	MB_80'sPopRock	4 / 4	4	111	●		:
DrPc	PopRk	4787	MC_80'sPopRock	4 / 4	4	111	●		:
DrPc	PopRk	4788	FA_80'sPopRock	4 / 4	1	111	●		:
DrPc	PopRk	4789	FB_80'sPopRock	4 / 4	1	111	●		:
DrPc	PopRk	4790	FC_80'sPopRock	4 / 4	1	111	●		:
DrPc	PopRk	4791	BA_80'sPopRock	4 / 4	1	111	●		:
DrPc	PopRk	4792	EA_80'sPopRock	4 / 4	7	111	●		:
DrPc	PopRk	4793	MA_80'sSynthRock	4 / 4	4	96	●		"Modern Rock Kit"
DrPc	PopRk	4794	MB_80'sSynthRock	4 / 4	4	96	●		:
DrPc	PopRk	4795	MC_80'sSynthRock	4 / 4	8	96	●		:
DrPc	PopRk	4796	FA_80'sSynthRock	4 / 4	1	96	●		:
DrPc	PopRk	4797	FB_80'sSynthRock	4 / 4	1	96	●		:
DrPc	PopRk	4798	FC_80'sSynthRock	4 / 4	1	96	●		:
DrPc	PopRk	4799	BA_80'sSynthRock	4 / 4	1	96	●		:
DrPc	PopRk	4800	EA_80'sSynthRock	4 / 4	3	96	●		:
DrPc	PopRk	4801	MA_60sVintagePop	4 / 4	4	132	●		"Jazz Kit"
DrPc	PopRk	4802	MB_60sVintagePop	4 / 4	4	132	●		:
DrPc	PopRk	4803	MC_60sVintagePop	4 / 4	4	132	●		:
DrPc	PopRk	4804	FA_60sVintagePop	4 / 4	1	132	●		:
DrPc	PopRk	4805	FB_60sVintagePop	4 / 4	1	132	●		:
DrPc	PopRk	4806	FC_60sVintagePop	4 / 4	1	132	●		:
DrPc	PopRk	4807	BA_60sVintagePop	4 / 4	1	132	●		:
DrPc	PopRk	4808	EA_60sVintagePop	4 / 4	2	132	●		:

Main Category	Sub Category	ARP No.	ARP Name	Time Signature	Length	Original Tempo	Accent	Random SFX	Voice Type
DrPc	PopRk	4809	MA_60sChartSwing	4 / 4	4	123	●		"Power Standard Kit 1"
DrPc	PopRk	4810	MB_60sChartSwing	4 / 4	4	123	●		:
DrPc	PopRk	4811	MC_60sChartSwing	4 / 4	4	123	●		:
DrPc	PopRk	4812	FA_60sChartSwing	4 / 4	1	123	●		:
DrPc	PopRk	4813	FB_60sChartSwing	4 / 4	1	123	●		:
DrPc	PopRk	4814	FC_60sChartSwing	4 / 4	1	123	●		:
DrPc	PopRk	4815	BA_60sChartSwing	4 / 4	1	123	●		:
DrPc	PopRk	4816	EA_60sChartSwing	4 / 4	4	123	●		:
DrPc	PopRk	4817	MA_16BeatBasic1	4 / 4	4	90	●		:
DrPc	PopRk	4818	MB_16BeatBasic1	4 / 4	4	90	●		:
DrPc	PopRk	4819	MC_16BeatBasic1	4 / 4	4	90	●		:
DrPc	PopRk	4820	FA_16BeatBasic1	4 / 4	1	90	●		:
DrPc	PopRk	4821	FB_16BeatBasic1	4 / 4	1	90	●		:
DrPc	PopRk	4822	FC_16BeatBasic1	4 / 4	1	90	●		:
DrPc	PopRk	4823	BA_16BeatBasic1	4 / 4	1	90	●		:
DrPc	PopRk	4824	MA_16BeatBasic2	4 / 4	4	77	●		:
DrPc	PopRk	4825	MB_16BeatBasic2	4 / 4	4	77	●		:
DrPc	PopRk	4826	MC_16BeatBasic2	4 / 4	4	77	●		:
DrPc	PopRk	4827	FA_16BeatBasic2	4 / 4	1	77	●		:
DrPc	PopRk	4828	FB_16BeatBasic2	4 / 4	1	77	●		:
DrPc	PopRk	4829	FC_16BeatBasic2	4 / 4	1	77	●		:
DrPc	PopRk	4830	BA_16BeatBasic2	4 / 4	1	77	●		:
DrPc	PopRk	4831	MA_16Beat Pop 1	4 / 4	4	103	●		:
DrPc	PopRk	4832	MB_16Beat Pop 1	4 / 4	4	103	●		:
DrPc	PopRk	4833	MC_16Beat Pop 1	4 / 4	4	103	●		:
DrPc	PopRk	4834	FA_16Beat Pop 1	4 / 4	1	103	●		:
DrPc	PopRk	4835	FB_16Beat Pop 1	4 / 4	1	103	●		:
DrPc	PopRk	4836	FC_16Beat Pop 1	4 / 4	1	103	●		:
DrPc	PopRk	4837	BA_16Beat Pop 1	4 / 4	1	103	●		:
DrPc	PopRk	4838	MA_16Beat Pop 2	4 / 4	4	94	●		"Analog T8 Kit"
DrPc	PopRk	4839	MB_16Beat Pop 2	4 / 4	4	94	●		:
DrPc	PopRk	4840	MC_16Beat Pop 2	4 / 4	4	94	●		:
DrPc	PopRk	4841	FA_16Beat Pop 2	4 / 4	1	94	●		:
DrPc	PopRk	4842	FB_16Beat Pop 2	4 / 4	1	94	●		:
DrPc	PopRk	4843	FC_16Beat Pop 2	4 / 4	1	94	●		:
DrPc	PopRk	4844	BA_16Beat Pop 2	4 / 4	1	94	●		:
DrPc	PopRk	4845	MA_Piano Club	4 / 4	2	96	●		"Hyper Standard Kit"
DrPc	PopRk	4846	MB_Piano Club	4 / 4	2	96	●		:
DrPc	PopRk	4847	MC_Piano Club	4 / 4	2	96	●		:
DrPc	PopRk	4848	MD_Piano Club	4 / 4	2	96	●		:
DrPc	PopRk	4849	IA_Piano Club/a	4 / 4	2	96	●		:
DrPc	PopRk	4850	IA_Piano Club/b	4 / 4	2	96	●		:
DrPc	PopRk	4851	FA_Piano Club	4 / 4	1	96	●		:
DrPc	PopRk	4852	FB_Piano Club	4 / 4	1	96	●		:
DrPc	PopRk	4853	FC_Piano Club/a	4 / 4	2	96	●		:
DrPc	PopRk	4854	FC_Piano Club/b	4 / 4	1	96	●		:
DrPc	PopRk	4855	MA_Analog Pop	4 / 4	2	93	●		"Analog T8 Kit"
DrPc	PopRk	4856	MB_Analog Pop	4 / 4	2	93	●		:
DrPc	PopRk	4857	MC_Analog Pop	4 / 4	2	93	●		:
DrPc	PopRk	4858	MD_Analog Pop	4 / 4	4	93	●		:
DrPc	PopRk	4859	IA_Analog Pop	4 / 4	2	93	●		:
DrPc	PopRk	4860	FA_Analog Pop	4 / 4	1	93	●		:
DrPc	PopRk	4861	FB_Analog Pop	4 / 4	1	93	●		:
DrPc	PopRk	4862	FC_Analog Pop	4 / 4	2	93	●		:
DrPc	PopRk	4863	MA1_Psycho Beatz	4 / 4	4	94	●		"Psychedelic Kit"
DrPc	PopRk	4864	MA2_Psycho Beatz	4 / 4	4	94	●		:
DrPc	PopRk	4865	MA3_Psycho Beatz	4 / 4	1	94	●		:
DrPc	PopRk	4866	MB1_Psycho Beatz	4 / 4	4	94	●		:
DrPc	PopRk	4867	MB2_Psycho Beatz	4 / 4	4	94	●		:
DrPc	PopRk	4868	MB3_Psycho Beatz	4 / 4	1	94	●		:
DrPc	PopRk	4869	MB4_Psycho Beatz	4 / 4	1	94	●		:
DrPc	PopRk	4870	MC1_Psycho Beatz	4 / 4	2	94	●		:
DrPc	PopRk	4871	MC2_Psycho Beatz	4 / 4	2	94	●		:
DrPc	PopRk	4872	MC3_Psycho Beatz	4 / 4	4	94	●		:
DrPc	PopRk	4873	MC4_Psycho Beatz	4 / 4	4	94	●		:
DrPc	PopRk	4874	MD1_Psycho Beatz	4 / 4	4	94	●		:
DrPc	PopRk	4875	MD2_Psycho Beatz	4 / 4	4	94	●		:
DrPc	PopRk	4876	MD3_Psycho Beatz	4 / 4	4	94	●		:
DrPc	PopRk	4877	MD4_Psycho Beatz	4 / 4	4	94	●		:
DrPc	PopRk	4878	ME1_Psycho Beatz	4 / 4	4	94	●		:
DrPc	PopRk	4879	ME2_Psycho Beatz	4 / 4	4	94	●		:
DrPc	PopRk	4880	ME3_Psycho Beatz	4 / 4	4	94	●		:
DrPc	PopRk	4881	ME4_Psycho Beatz	4 / 4	4	94	●		:
DrPc	PopRk	4882	MA_8Z RX11	4 / 4	1	140	●		"8Z RX11"
DrPc	PopRk	4883	MB_8Z RX11	4 / 4	1	140	●		:
DrPc	PopRk	4884	MC_8Z RX11	4 / 4	2	140	●		:
DrPc	PopRk	4885	FA_8Z RX11	4 / 4	1	140	●		:
DrPc	PopRk	4886	FB_8Z RX11	4 / 4	1	140	●		:
DrPc	PopRk	4887	EA_8Z RX11	4 / 4	3	140	●		:
DrPc	PopRk	4888	MA_6/8 Pop	4 / 4	4	100	●		"Power Standard Kit 1"
DrPc	PopRk	4889	MB_6/8 Pop	4 / 4	4	100	●		:
DrPc	PopRk	4890	MC_6/8 Pop	4 / 4	4	100	●		:
DrPc	PopRk	4891	FA_6/8 Pop	4 / 4	1	100	●		:

Main Category	Sub Category	ARP No.	ARP Name	Time Signature	Length	Original Tempo	Accent	Random SFX	Voice Type
DrPc	PopRk	4892	FB_6/8 Pop	4 / 4	1	100	●		"Power Standard Kit 1"
DrPc	PopRk	4893	FC_6/8 Pop	4 / 4	1	100	●		:
DrPc	PopRk	4894	BA_6/8 Pop	4 / 4	1	100	●		:
DrPc	PopRk	4895	EA_6/8Pop	4 / 4	3	123	●		:
DrPc	Balad	4896	MA_GuitarBallad	4 / 4	8	94	●		:
DrPc	Balad	4897	MB_GuitarBallad	4 / 4	8	94	●		:
DrPc	Balad	4898	MC_GuitarBallad	4 / 4	8	94	●		:
DrPc	Balad	4899	FA_GuitarBallad	4 / 4	1	94	●		:
DrPc	Balad	4900	FB_GuitarBallad	4 / 4	1	94	●		:
DrPc	Balad	4901	FC_GuitarBallad	4 / 4	1	94	●		:
DrPc	Balad	4902	BA_GuitarBallad	4 / 4	1	94	●		:
DrPc	Balad	4903	EA_GuitarBallad	4 / 4	4	94	●		:
DrPc	Balad	4904	EB_GuitarBallad	4 / 4	4	94	●		:
DrPc	Balad	4905	MA_Unplugged 1	4 / 4	4	120	●		:
DrPc	Balad	4906	MB_Unplugged 1	4 / 4	4	120	●		:
DrPc	Balad	4907	MC_Unplugged 1	4 / 4	4	120	●		:
DrPc	Balad	4908	FA_Unplugged 1	4 / 4	1	120	●		:
DrPc	Balad	4909	FB_Unplugged 1	4 / 4	1	120	●		:
DrPc	Balad	4910	FC_Unplugged 1	4 / 4	1	120	●		:
DrPc	Balad	4911	BA_Unplugged 1	4 / 4	1	120	●		:
DrPc	Balad	4912	MA1_Unplugged 2	4 / 4	8	120	●		:
DrPc	Balad	4913	MB1_Unplugged 2	4 / 4	8	120	●		:
DrPc	Balad	4914	MC1_Unplugged 2	4 / 4	8	120	●		:
DrPc	Balad	4915	FA1_Unplugged 2	4 / 4	1	120	●		:
DrPc	Balad	4916	FB1_Unplugged 2	4 / 4	1	120	●		:
DrPc	Balad	4917	FC1_Unplugged 2	4 / 4	1	120	●		:
DrPc	Balad	4918	BA1_Unplugged 2	4 / 4	1	120	●		:
DrPc	Balad	4919	MA2_Unplugged 2	4 / 4	8	120	●		:
DrPc	Balad	4920	MB2_Unplugged 2	4 / 4	8	120	●		:
DrPc	Balad	4921	MC2_Unplugged 2	4 / 4	8	120	●		:
DrPc	Balad	4922	FA2_Unplugged 2	4 / 4	1	120	●		:
DrPc	Balad	4923	FB2_Unplugged 2	4 / 4	1	120	●		:
DrPc	Balad	4924	FC2_Unplugged 2	4 / 4	1	120	●		:
DrPc	Balad	4925	BA2_Unplugged 2	4 / 4	1	120	●		:
DrPc	Balad	4926	EA1_Unplugged 2	4 / 4	5	120	●		:
DrPc	Balad	4927	EB1_Unplugged 2	4 / 4	4	120	●		:
DrPc	Balad	4928	MA_Unplugged 3	4 / 4	4	113	●		"Power Standard Kit 2"
DrPc	Balad	4929	MB_Unplugged 3	4 / 4	4	113	●		:
DrPc	Balad	4930	MC_Unplugged 3	4 / 4	4	113	●		:
DrPc	Balad	4931	FA_Unplugged 3	4 / 4	1	113	●		:
DrPc	Balad	4932	FB_Unplugged 3	4 / 4	1	113	●		:
DrPc	Balad	4933	FC_Unplugged 3	4 / 4	1	113	●		:
DrPc	Balad	4934	BA_Unplugged 3	4 / 4	1	113	●		:
DrPc	Balad	4935	MA_Unplugged 4	4 / 4	4	120	●		"Dry Standard Kit"
DrPc	Balad	4936	MB_Unplugged 4	4 / 4	4	120	●		:
DrPc	Balad	4937	MC_Unplugged 4	4 / 4	4	120	●		:
DrPc	Balad	4938	MD_Unplugged 4	4 / 4	4	120	●		:
DrPc	Balad	4939	IA_Unplugged 4	4 / 4	1	120	●		:
DrPc	Balad	4940	FA_Unplugged 4	4 / 4	1	120	●		:
DrPc	Balad	4941	FB_Unplugged 4	4 / 4	1	120	●		:
DrPc	Balad	4942	FC_Unplugged 4	4 / 4	1	120	●		:
DrPc	Balad	4943	EA_Unplugged 4	4 / 4	4	120	●		:
DrPc	Balad	4944	EB_Unplugged 4	4 / 4	3	120	●		:
DrPc	Balad	4945	MA_8Beat Ballad	4 / 4	4	101	●		"Brush Kit"
DrPc	Balad	4946	MB_8Beat Ballad	4 / 4	4	101	●		:
DrPc	Balad	4947	MC_8Beat Ballad	4 / 4	4	101	●		:
DrPc	Balad	4948	FA_8Beat Ballad	4 / 4	1	101	●		:
DrPc	Balad	4949	FB_8Beat Ballad	4 / 4	1	101	●		:
DrPc	Balad	4950	FC_8Beat Ballad	4 / 4	1	101	●		:
DrPc	Balad	4951	BA_8Beat Ballad	4 / 4	1	101	●		:
DrPc	Balad	4952	EA_8Beat Ballad	4 / 4	5	101	●		:
DrPc	Balad	4953	EB_8Beat Ballad	4 / 4	5	101	●		:
DrPc	Balad	4954	MA_EP Ballad	4 / 4	2	60	●		"Power Standard Kit 2"
DrPc	Balad	4955	MB_EP Ballad	4 / 4	2	60	●		:
DrPc	Balad	4956	MC_EP Ballad	4 / 4	2	60	●		:
DrPc	Balad	4957	FA_EP Ballad	4 / 4	1	60	●		:
DrPc	Balad	4958	FB_EP Ballad	4 / 4	1	60	●		:
DrPc	Balad	4959	FC_EP Ballad	4 / 4	1	60	●		:
DrPc	Balad	4960	BA_EP Ballad	4 / 4	1	60	●		:
DrPc	Balad	4961	EA_EP Ballad	4 / 4	4	60	●		:
DrPc	Balad	4962	EB_EP Ballad	4 / 4	4	60	●		:
DrPc	Balad	4963	MA_Ballad 1	4 / 4	2	72	●		"Hyper Standard Kit"
DrPc	Balad	4964	MB_Ballad 1	4 / 4	2	72	●		:
DrPc	Balad	4965	MA_Ballad 2	4 / 4	2	72	●		:
DrPc	Balad	4966	MB_Ballad 2	4 / 4	2	72	●		:
DrPc	Balad	4967	MA_Ballad 3	4 / 4	2	72	●		:
DrPc	Balad	4968	MB_Ballad 3	4 / 4	1	72	●		:
DrPc	Balad	4969	MA_8Beat Slow	4 / 4	4	78	●		"Power Standard Kit 2"
DrPc	Balad	4970	MB_8Beat Slow	4 / 4	4	78	●		:
DrPc	Balad	4971	MC_8Beat Slow	4 / 4	4	78	●		:
DrPc	Balad	4972	FA_8Beat Slow	4 / 4	1	78	●		:
DrPc	Balad	4973	FB_8Beat Slow	4 / 4	1	78	●		:
DrPc	Balad	4974	FC_8Beat Slow	4 / 4	1	78	●		:

Main Category	Sub Category	ARP No.	ARP Name	Time Signature	Length	Original Tempo	Accent	Random SFX	Voice Type
DrPc	Balad	4975	BA_8Beat Slow	4 / 4	1	78	●		"Power Standard Kit 2"
DrPc	Balad	4976	MA_Slowfeel	4 / 4	1	74	●		"Hyper Standard Kit"
DrPc	Balad	4977	MB_Slowfeel	4 / 4	1	74	●		:
DrPc	Balad	4978	MC_Slowfeel	4 / 4	1	74	●		:
DrPc	Balad	4979	MD_Slowfeel	4 / 4	1	74	●		:
DrPc	Balad	4980	IA_Slowfeel	4 / 4	2	74	●		:
DrPc	Balad	4981	FA_Slowfeel	4 / 4	1	74	●		:
DrPc	Balad	4982	FB_Slowfeel	4 / 4	1	74	●		:
DrPc	Balad	4983	FC_Slowfeel	4 / 4	2	74	●		:
DrPc	Balad	4984	MA_16Bt Ballad1	4 / 4	4	75	●		"Power Standard Kit 2"
DrPc	Balad	4985	MB_16Bt Ballad1	4 / 4	4	75	●		:
DrPc	Balad	4986	MC_16Bt Ballad1	4 / 4	4	75	●		:
DrPc	Balad	4987	FA_16Bt Ballad1	4 / 4	1	75	●		:
DrPc	Balad	4988	FB_16Bt Ballad1	4 / 4	1	75	●		:
DrPc	Balad	4989	FC_16Bt Ballad1	4 / 4	1	75	●		:
DrPc	Balad	4990	BA_16Bt Ballad1	4 / 4	1	75	●		:
DrPc	Balad	4991	MA_16Bt Ballad2	4 / 4	2	64	●		"Power Standard Kit 1"
DrPc	Balad	4992	MB_16Bt Ballad2	4 / 4	2	64	●		:
DrPc	Balad	4993	MC_16Bt Ballad2	4 / 4	2	64	●		:
DrPc	Balad	4994	MD_16Bt Ballad2	4 / 4	2	64	●		:
DrPc	Balad	4995	ME_16Bt Ballad2	4 / 4	2	64	●		:
DrPc	Balad	4996	MF_16Bt Ballad2	4 / 4	2	64	●		:
DrPc	Balad	4997	BA_16Bt Ballad2	4 / 4	1	64	●		:
DrPc	Balad	4998	MA_ChillKitPop1	4 / 4	2	85	●		"Chill Out Kit"
DrPc	Balad	4999	MA_ChillKitPop2	4 / 4	2	85	●		:
DrPc	Balad	5000	MA_ChillKitPop3	4 / 4	2	85	●		:
DrPc	Balad	5001	MA_ChillKitPop4	4 / 4	2	85	●		:
DrPc	Balad	5002	MA_ChillKitPop5	4 / 4	2	85	●		:
DrPc	Balad	5003	MA_ChlKtBallad1	4 / 4	2	90	●		:
DrPc	Balad	5004	MB_ChlKtBallad1	4 / 4	2	90	●		:
DrPc	Balad	5005	MA_ChlKtBallad2	4 / 4	2	90	●		:
DrPc	Balad	5006	MB_ChlKtBallad2	4 / 4	2	90	●		:
DrPc	Balad	5007	MA_ChlKtBallad3	4 / 4	2	90	●		:
DrPc	Balad	5008	MA_ChlKtBallad4	4 / 4	2	90	●		:
DrPc	Balad	5009	MA_ChlKtBallad5	4 / 4	2	90	●		:
DrPc	Balad	5010	MA_Nu Jazzy	4 / 4	2	61	●		"Nu Jazzy Kit"
DrPc	Balad	5011	MB_Nu Jazzy	4 / 4	2	61	●		:
DrPc	Balad	5012	MC_Nu Jazzy	4 / 4	2	61	●		:
DrPc	Balad	5013	FA_Nu Jazzy	4 / 4	1	61	●		:
DrPc	Balad	5014	EA_Nu Jazzy	4 / 4	4	61	●		:
DrPc	Balad	5015	MA_6/8 Ballad	6 / 8	4	87	●		"Power Standard Kit 2"
DrPc	Balad	5016	MB_6/8 Ballad	6 / 8	4	87	●		:
DrPc	Balad	5017	MC_6/8 Ballad	6 / 8	4	87	●		:
DrPc	Balad	5018	FA_6/8 Ballad	6 / 8	1	87	●		:
DrPc	Balad	5019	FB_6/8 Ballad	6 / 8	1	87	●		:
DrPc	Balad	5020	FC_6/8 Ballad	6 / 8	1	87	●		:
DrPc	Balad	5021	BA_6/8 Ballad	6 / 8	1	87	●		:
DrPc	Balad	5022	EA_6/8 Ballad	6 / 8	6	87	●		:
DrPc	Balad	5023	EB_6/8 Ballad	6 / 8	6	87	●		:
DrPc	HipHp	5024	MA1_New Hip Hop	4 / 4	2	85	●		"Power Standard Kit 1"
DrPc	HipHp	5025	MB1_New Hip Hop	4 / 4	2	85	●		:
DrPc	HipHp	5026	MC1_New Hip Hop	4 / 4	2	85	●		:
DrPc	HipHp	5027	FA1_New Hip Hop	4 / 4	1	85	●		:
DrPc	HipHp	5028	FB1_New Hip Hop	4 / 4	1	85	●		:
DrPc	HipHp	5029	FC1_New Hip Hop	4 / 4	1	85	●		:
DrPc	HipHp	5030	BA1_New Hip Hop	4 / 4	1	85	●		:
DrPc	HipHp	5031	EA1_New Hip Hop	4 / 4	3	85	●		:
DrPc	HipHp	5032	EB1_New Hip Hop	4 / 4	3	85	●		:
DrPc	HipHp	5033	MA2_New Hip Hop	4 / 4	2	85	●		"Hip Hop Kit 2"
DrPc	HipHp	5034	MB2_New Hip Hop	4 / 4	2	85	●		:
DrPc	HipHp	5035	MC2_New Hip Hop	4 / 4	2	85	●		:
DrPc	HipHp	5036	FA2_New Hip Hop	4 / 4	1	85	●		:
DrPc	HipHp	5037	FB2_New Hip Hop	4 / 4	1	85	●		:
DrPc	HipHp	5038	FC2_New Hip Hop	4 / 4	1	85	●		:
DrPc	HipHp	5039	BA2_New Hip Hop	4 / 4	1	85	●		:
DrPc	HipHp	5040	EA2_New Hip Hop	4 / 4	3	85	●		:
DrPc	HipHp	5041	EB2_New Hip Hop	4 / 4	3	85	●		:
DrPc	HipHp	5042	MA_East Coast	4 / 4	2	103	●		"Hip Hop Kit 1"
DrPc	HipHp	5043	MB_East Coast	4 / 4	2	103	●		:
DrPc	HipHp	5044	MC_East Coast	4 / 4	2	103	●		:
DrPc	HipHp	5045	MD_East Coast	4 / 4	2	103	●		:
DrPc	HipHp	5046	FA_East Coast	4 / 4	1	103	●		:
DrPc	HipHp	5047	FB_East Coast	4 / 4	1	103	●		:
DrPc	HipHp	5048	FC_East Coast	4 / 4	1	103	●		:
DrPc	HipHp	5049	FD_East Coast	4 / 4	1	103	●		:
DrPc	HipHp	5050	MA1_West Coast	4 / 4	2	97	●		"Hip Hop Kit 2"
DrPc	HipHp	5051	MB1_West Coast	4 / 4	2	97	●		:
DrPc	HipHp	5052	MC1_West Coast	4 / 4	2	97	●		:
DrPc	HipHp	5053	MD1_West Coast	4 / 4	2	97	●		:
DrPc	HipHp	5054	FA1_West Coast	4 / 4	1	97	●		:
DrPc	HipHp	5055	FB1_West Coast	4 / 4	1	97	●		:
DrPc	HipHp	5056	FC1_West Coast	4 / 4	1	97	●		:
DrPc	HipHp	5057	FD1_West Coast	4 / 4	1	97	●		:

Main Category	Sub Category	ARP No.	ARP Name	Time Signature	Length	Original Tempo	Accent	Random SFX	Voice Type
DrPc	HipHp	5058	MA2_West Coast	4 / 4	2	97	●		"Hip Hop Kit 1"
DrPc	HipHp	5059	MB2_West Coast	4 / 4	2	97	●		:
DrPc	HipHp	5060	MC2_West Coast	4 / 4	2	97	●		:
DrPc	HipHp	5061	MD2_West Coast	4 / 4	2	97	●		:
DrPc	HipHp	5062	FA2_West Coast	4 / 4	1	97	●		:
DrPc	HipHp	5063	FB2_West Coast	4 / 4	1	97	●		:
DrPc	HipHp	5064	FC2_West Coast	4 / 4	1	97	●		:
DrPc	HipHp	5065	FD2_West Coast	4 / 4	1	97	●		:
DrPc	HipHp	5066	MA1_South Rap 1	4 / 4	4	98	●		"Belly Dance Kit"
DrPc	HipHp	5067	MB1_South Rap 1	4 / 4	4	98	●		:
DrPc	HipHp	5068	MC1_South Rap 1	4 / 4	4	98	●		:
DrPc	HipHp	5069	MD1_South Rap 1	4 / 4	4	98	●		:
DrPc	HipHp	5070	FA1_South Rap 1	4 / 4	1	98	●		:
DrPc	HipHp	5071	FB1_South Rap 1	4 / 4	1	98	●		:
DrPc	HipHp	5072	FC1_South Rap 1	4 / 4	1	98	●		:
DrPc	HipHp	5073	FD1_South Rap 1	4 / 4	1	98	●		:
DrPc	HipHp	5074	MA2_South Rap 1	4 / 4	4	98	●		"Hip Hop Kit 1"
DrPc	HipHp	5075	MB2_South Rap 1	4 / 4	4	98	●		:
DrPc	HipHp	5076	MC2_South Rap 1	4 / 4	4	98	●		:
DrPc	HipHp	5077	MD2_South Rap 1	4 / 4	4	98	●		:
DrPc	HipHp	5078	FA2_South Rap 1	4 / 4	1	98	●		:
DrPc	HipHp	5079	FB2_South Rap 1	4 / 4	1	98	●		:
DrPc	HipHp	5080	FC2_South Rap 1	4 / 4	1	98	●		:
DrPc	HipHp	5081	FD2_South Rap 1	4 / 4	1	98	●		:
DrPc	HipHp	5082	MB1_South Rap 2	4 / 4	2	90	●		"Hip Hop Kit 2"
DrPc	HipHp	5083	MC1_South Rap 2	4 / 4	2	90	●		:
DrPc	HipHp	5084	MD1_South Rap 2	4 / 4	2	90	●		:
DrPc	HipHp	5085	FA1_South Rap 2	4 / 4	1	90	●		:
DrPc	HipHp	5086	FB1_South Rap 2	4 / 4	1	90	●		:
DrPc	HipHp	5087	FC1_South Rap 2	4 / 4	1	90	●		:
DrPc	HipHp	5088	FD1_South Rap 2	4 / 4	1	90	●		:
DrPc	HipHp	5089	MA2_South Rap 2	4 / 4	2	90	●		"Hip Hop Kit 1"
DrPc	HipHp	5090	MB2_South Rap 2	4 / 4	2	90	●		:
DrPc	HipHp	5091	MC2_South Rap 2	4 / 4	2	90	●		:
DrPc	HipHp	5092	MD2_South Rap 2	4 / 4	2	90	●		:
DrPc	HipHp	5093	FA2_South Rap 2	4 / 4	1	90	●		:
DrPc	HipHp	5094	FB2_South Rap 2	4 / 4	1	90	●		:
DrPc	HipHp	5095	FC2_South Rap 2	4 / 4	1	90	●		:
DrPc	HipHp	5096	FD2_South Rap 2	4 / 4	1	90	●		:
DrPc	HipHp	5097	MA_Hip Hop 1	4 / 4	2	105	●		"Hip Hop Kit 3"
DrPc	HipHp	5098	MB_Hip Hop 1	4 / 4	2	105	●		:
DrPc	HipHp	5099	MC_Hip Hop 1	4 / 4	2	105	●		:
DrPc	HipHp	5100	MD_Hip Hop 1	4 / 4	2	105	●		:
DrPc	HipHp	5101	IA_Hip Hop 1	4 / 4	1	105	●		:
DrPc	HipHp	5102	FA_Hip Hop 1	4 / 4	1	105	●		:
DrPc	HipHp	5103	FB_Hip Hop 1	4 / 4	1	105	●		:
DrPc	HipHp	5104	FC_Hip Hop 1	4 / 4	2	105	●		:
DrPc	HipHp	5105	MA_Hip Hop 2	4 / 4	2	104	●		:
DrPc	HipHp	5106	MB_Hip Hop 2	4 / 4	2	104	●		:
DrPc	HipHp	5107	MC_Hip Hop 2	4 / 4	2	104	●		:
DrPc	HipHp	5108	MD_Hip Hop 2	4 / 4	2	104	●		:
DrPc	HipHp	5109	IA_Hip Hop 2	4 / 4	1	104	●		:
DrPc	HipHp	5110	FA_Hip Hop 2	4 / 4	1	104	●		:
DrPc	HipHp	5111	FB_Hip Hop 2	4 / 4	1	104	●		:
DrPc	HipHp	5112	FC_Hip Hop 2	4 / 4	2	104	●		:
DrPc	HipHp	5113	MA_Hip Hop 3	4 / 4	2	94	●		"Break Kit"
DrPc	HipHp	5114	MB_Hip Hop 3	4 / 4	2	94	●		:
DrPc	HipHp	5115	MC_Hip Hop 3	4 / 4	2	94	●		:
DrPc	HipHp	5116	MD_Hip Hop 3	4 / 4	2	94	●		:
DrPc	HipHp	5117	IA_Hip Hop 3	4 / 4	2	94	●		:
DrPc	HipHp	5118	FA_Hip Hop 3	4 / 4	1	94	●		:
DrPc	HipHp	5119	FB_Hip Hop 3	4 / 4	1	94	●		:
DrPc	HipHp	5120	FC_Hip Hop 3	4 / 4	2	94	●		:
DrPc	HipHp	5121	MA_Hip Hop 4	4 / 4	2	96	●		"Hip Hop Kit 1"
DrPc	HipHp	5122	MA1_Hip Hop 5	4 / 4	2	103	●		:
DrPc	HipHp	5123	MB1_Hip Hop 5	4 / 4	4	103	●		:
DrPc	HipHp	5124	MC1_Hip Hop 5	4 / 4	2	103	●		:
DrPc	HipHp	5125	MD1_Hip Hop 5	4 / 4	2	103	●		:
DrPc	HipHp	5126	FA1_Hip Hop 5	4 / 4	1	103	●		:
DrPc	HipHp	5127	FB1_Hip Hop 5	4 / 4	1	103	●		:
DrPc	HipHp	5128	FC1_Hip Hop 5	4 / 4	1	103	●		:
DrPc	HipHp	5129	FD1_Hip Hop 5	4 / 4	1	103	●		:
DrPc	HipHp	5130	MA2_Hip Hop 5	4 / 4	2	103	●		"Nu Hip Hop Kit 2"
DrPc	HipHp	5131	MB2_Hip Hop 5	4 / 4	4	103	●		:
DrPc	HipHp	5132	MC2_Hip Hop 5	4 / 4	2	103	●		:
DrPc	HipHp	5133	MD2_Hip Hop 5	4 / 4	2	103	●		:
DrPc	HipHp	5134	FA2_Hip Hop 5	4 / 4	1	103	●		:
DrPc	HipHp	5135	FB2_Hip Hop 5	4 / 4	1	103	●		:
DrPc	HipHp	5136	FC2_Hip Hop 5	4 / 4	1	103	●		:
DrPc	HipHp	5137	FD2_Hip Hop 5	4 / 4	1	103	●		:
DrPc	HipHp	5138	MA_Hip Hop 6	4 / 4	4	96	●		"Hip Hop Kit 1"
DrPc	HipHp	5139	MB_Hip Hop 6	4 / 4	4	96	●		:
DrPc	HipHp	5140	MC_Hip Hop 6	4 / 4	4	96	●		:

Main Category	Sub Category	ARP No.	ARP Name	Time Signature	Length	Original Tempo	Accent	Random SFX	Voice Type
DrPc	HipHp	5141	FA_Hip Hop 6	4 / 4	1	96	●		"Hip Hop Kit 1"
DrPc	HipHp	5142	FB_Hip Hop 6	4 / 4	1	96	●		:
DrPc	HipHp	5143	FC_Hip Hop 6	4 / 4	1	96	●		:
DrPc	HipHp	5144	BA_Hip Hop 6	4 / 4	1	96	●		:
DrPc	HipHp	5145	MA1_Hip Break	4 / 4	4	98	●		:
DrPc	HipHp	5146	MB1_Hip Break	4 / 4	4	98	●		:
DrPc	HipHp	5147	MC1_Hip Break	4 / 4	4	98	●		:
DrPc	HipHp	5148	FA1_Hip Break	4 / 4	1	98	●		:
DrPc	HipHp	5149	FB1_Hip Break	4 / 4	1	98	●		:
DrPc	HipHp	5150	FC1_Hip Break	4 / 4	1	98	●		:
DrPc	HipHp	5151	BA1_Hip Break	4 / 4	1	98	●		:
DrPc	HipHp	5152	MA2_Hip Break	4 / 4	4	98	●		"Break Kit"
DrPc	HipHp	5153	MB2_Hip Break	4 / 4	4	98	●		:
DrPc	HipHp	5154	MC2_Hip Break	4 / 4	4	98	●		:
DrPc	HipHp	5155	FA2_Hip Break	4 / 4	1	98	●		:
DrPc	HipHp	5156	FB2_Hip Break	4 / 4	1	98	●		:
DrPc	HipHp	5157	FC2_Hip Break	4 / 4	1	98	●		:
DrPc	HipHp	5158	BA2_Hip Break	4 / 4	1	98	●		:
DrPc	HipHp	5159	MA_Hip Rock 1	4 / 4	4	90	●		"Rock Stereo Kit 2"
DrPc	HipHp	5160	MB_Hip Rock 1	4 / 4	4	90	●		:
DrPc	HipHp	5161	MC_Hip Rock 1	4 / 4	4	90	●		:
DrPc	HipHp	5162	FA_Hip Rock 1	4 / 4	1	90	●		:
DrPc	HipHp	5163	FB_Hip Rock 1	4 / 4	1	90	●		:
DrPc	HipHp	5164	FC_Hip Rock 1	4 / 4	1	90	●		:
DrPc	HipHp	5165	BA_Hip Rock 1	4 / 4	1	90	●		:
DrPc	HipHp	5166	MA_Hip Rock 2	4 / 4	4	132	●		"House Kit 2"
DrPc	HipHp	5167	MB_Hip Rock 2	4 / 4	4	132	●		:
DrPc	HipHp	5168	MC_Hip Rock 2	4 / 4	4	132	●		:
DrPc	HipHp	5169	FA_Hip Rock 2	4 / 4	1	132	●		:
DrPc	HipHp	5170	FB_Hip Rock 2	4 / 4	1	132	●		:
DrPc	HipHp	5171	FC_Hip Rock 2	4 / 4	1	132	●		:
DrPc	HipHp	5172	BA_Hip Rock 2	4 / 4	1	132	●		:
DrPc	HipHp	5173	MA1_Hip Reggae	4 / 4	4	92	●		"House Kit 1"
DrPc	HipHp	5174	MB1_Hip Reggae	4 / 4	4	92	●		:
DrPc	HipHp	5175	MC1_Hip Reggae	4 / 4	4	92	●		:
DrPc	HipHp	5176	FA1_Hip Reggae	4 / 4	1	92	●		:
DrPc	HipHp	5177	FB1_Hip Reggae	4 / 4	1	92	●		:
DrPc	HipHp	5178	FC1_Hip Reggae	4 / 4	1	92	●		:
DrPc	HipHp	5179	BA1_Hip Reggae	4 / 4	1	92	●		:
DrPc	HipHp	5180	MA2_Hip Reggae	4 / 4	4	92	●		"Latin Percussion Kit"
DrPc	HipHp	5181	MB2_Hip Reggae	4 / 4	4	92	●		:
DrPc	HipHp	5182	MC2_Hip Reggae	4 / 4	4	92	●		:
DrPc	HipHp	5183	FA2_Hip Reggae	4 / 4	1	92	●		:
DrPc	HipHp	5184	FB2_Hip Reggae	4 / 4	1	92	●		:
DrPc	HipHp	5185	FC2_Hip Reggae	4 / 4	1	92	●		:
DrPc	HipHp	5186	BA2_Hip Reggae	4 / 4	1	92	●		:
DrPc	HipHp	5187	MA1_Regeton	4 / 4	4	98	●		"Hip Hop Kit 1"
DrPc	HipHp	5188	MB1_Regeton	4 / 4	4	98	●		:
DrPc	HipHp	5189	MC1_Regeton	4 / 4	4	98	●		:
DrPc	HipHp	5190	FA1_Regeton	4 / 4	1	98	●		:
DrPc	HipHp	5191	FB1_Regeton	4 / 4	1	98	●		:
DrPc	HipHp	5192	FC1_Regeton	4 / 4	1	98	●		:
DrPc	HipHp	5193	BA1_Regeton	4 / 4	1	98	●		:
DrPc	HipHp	5194	MA2_Regeton	4 / 4	4	98	●		"Percussion Kit"
DrPc	HipHp	5195	MB2_Regeton	4 / 4	4	98	●		:
DrPc	HipHp	5196	MC2_Regeton	4 / 4	4	98	●		:
DrPc	HipHp	5197	FA2_Regeton	4 / 4	1	98	●		:
DrPc	HipHp	5198	FB2_Regeton	4 / 4	1	98	●		:
DrPc	HipHp	5199	FC2_Regeton	4 / 4	1	98	●		:
DrPc	HipHp	5200	BA2_Regeton	4 / 4	1	98	●		:
DrPc	HipHp	5201	MA_Dancehall	4 / 4	4	103	●		"Break Kit"
DrPc	HipHp	5202	MB_Dancehall	4 / 4	4	103	●		:
DrPc	HipHp	5203	MD_Dancehall	4 / 4	4	103	●		:
DrPc	HipHp	5204	FA_Dancehall	4 / 4	1	103	●		:
DrPc	HipHp	5205	FB_Dancehall	4 / 4	1	103	●		:
DrPc	HipHp	5206	FD_Dancehall	4 / 4	1	103	●		:
DrPc	HipHp	5207	BA_Dancehall	4 / 4	1	103	●		:
DrPc	HipHp	5208	EA_Dancehall	4 / 4	3	103	●		:
DrPc	HipHp	5209	MA_Hip Ethnic 1	4 / 4	2	94	●		"Hip Hop Kit 1"
DrPc	HipHp	5210	MB_Hip Ethnic 1	4 / 4	2	94	●		:
DrPc	HipHp	5211	MC_Hip Ethnic 1	4 / 4	2	94	●		:
DrPc	HipHp	5212	MD_Hip Ethnic 1	4 / 4	2	94	●		:
DrPc	HipHp	5213	ME_Hip Ethnic 1	4 / 4	2	94	●		:
DrPc	HipHp	5214	MF_Hip Ethnic 1	4 / 4	2	94	●		:
DrPc	HipHp	5215	BA_Hip Ethnic 1	4 / 4	1	94	●		:
DrPc	HipHp	5216	MA_Hip Ethnic 2	4 / 4	2	110	●		:
DrPc	HipHp	5217	MB_Hip Ethnic 2	4 / 4	2	110	●		:
DrPc	HipHp	5218	MC_Hip Ethnic 2	4 / 4	2	110	●		:
DrPc	HipHp	5219	MD_Hip Ethnic 2	4 / 4	2	110	●		:
DrPc	HipHp	5220	ME_Hip Ethnic 2	4 / 4	2	110	●		:
DrPc	HipHp	5221	MF_Hip Ethnic 2	4 / 4	2	110	●		:
DrPc	HipHp	5222	BA_Hip Ethnic 2	4 / 4	1	110	●		:
DrPc	HipHp	5223	MA_ClasicHipHop	4 / 4	2	90	●		"Hip Hop Kit 3"

Main Category	Sub Category	ARP No.	ARP Name	Time Signature	Length	Original Tempo	Accent	Random SFX	Voice Type
DrPc	HipHp	5224	MB_ClasicHipHop	4 / 4	1	90	●		"Hip Hop Kit 3"
DrPc	HipHp	5225	MC_ClasicHipHop	4 / 4	1	90	●		:
DrPc	HipHp	5226	MD_ClasicHipHop	4 / 4	2	90	●		:
DrPc	HipHp	5227	IA_ClasicHipHop/1a	4 / 4	2	90	●		:
DrPc	HipHp	5228	IA_ClasicHipHop/1b	4 / 4	1	90	●		:
DrPc	HipHp	5229	FA_ClasicHipHop	4 / 4	1	90	●		:
DrPc	HipHp	5230	FB_ClasicHipHop	4 / 4	1	90	●		:
DrPc	HipHp	5231	IA_ClasicHipHop/2	4 / 4	4	90	●		:
DrPc	HipHp	5232	MA_i-Hop	4 / 4	4	98	●		:
DrPc	HipHp	5233	MB_i-Hop	4 / 4	4	98	●		:
DrPc	HipHp	5234	MC_i-Hop	4 / 4	4	98	●		:
DrPc	HipHp	5235	MD_i-Hop	4 / 4	1	98	●		:
DrPc	HipHp	5236	MA_Gangsta	4 / 4	2	98	●		"Hip Hop Kit 4"
DrPc	HipHp	5237	MB_Gangsta	4 / 4	4	98	●		:
DrPc	HipHp	5238	MC_Gangsta	4 / 4	4	98	●		:
DrPc	HipHp	5239	MD_Gangsta	4 / 4	2	98	●		:
DrPc	HipHp	5240	MA_Jazz Hop	4 / 4	2	106	●		"Hip Hop Kit 2"
DrPc	HipHp	5241	MA_HipHop Loop1	4 / 4	4	97	●		"Nu Hip Hop Kit 1"
DrPc	HipHp	5242	MA_HipHop Loop2	4 / 4	4	81	●		:
DrPc	HipHp	5243	MA_HipHop Loop3	4 / 4	4	96	●		:
DrPc	HipHp	5244	MA_HipHop Loop4	4 / 4	4	93	●		:
DrPc	HipHp	5245	MA_HipHop Loop5	4 / 4	4	94	●		:
DrPc	HipHp	5246	MA_HipHop Loop6	4 / 4	4	95	●		:
DrPc	HipHp	5247	MA_HipHop Loop7	4 / 4	4	100	●		:
DrPc	HipHp	5248	MA_HipHop Loop8	4 / 4	4	87	●		:
DrPc	HipHp	5249	MA_HipHop Loop9	4 / 4	4	97	●		:
DrPc	HipHp	5250	MA_HipHopLoop10	4 / 4	4	95	●		:
DrPc	HipHp	5251	MA_HipHopLoop11	4 / 4	4	96	●		:
DrPc	HipHp	5252	MA_HipHopLoop12	4 / 4	2	100	●		:
DrPc	HipHp	5253	MA_HipHopLoop13	4 / 4	2	100	●		:
DrPc	HipHp	5254	MA_HipHopLoop14	4 / 4	1	81	●		:
DrPc	HipHp	5255	MA_HipHopLoop15	4 / 4	1	97	●		:
DrPc	HipHp	5256	MA_HipHopLoop16	4 / 4	2	100	●		:
DrPc	HipHp	5257	MA_HipHopLoop17	4 / 4	2	75	●		:
DrPc	HipHp	5258	MA_HipHopLoop18	4 / 4	2	96	●		"Illest Hip Hop Kit"
DrPc	HipHp	5259	MA_HipHopLoop19	4 / 4	2	88	●		:
DrPc	HipHp	5260	MA_HipHopLoop20	4 / 4	3	96	●		:
DrPc	HipHp	5261	MA_HipHopLoop21	4 / 4	2	93	●		:
DrPc	HipHp	5262	MA_HipHopLoop22	4 / 4	2	80	●		:
DrPc	HipHp	5263	MA_HipHopLoop23	4 / 4	4	98	●		:
DrPc	HipHp	5264	MA_HipHopLoop24	4 / 4	2	92	●		:
DrPc	HipHp	5265	MA_HipHopLoop25	4 / 4	2	96	●		:
DrPc	HipHp	5266	MA_HipHopLoop26	4 / 4	4	86	●		:
DrPc	HipHp	5267	MA_HipHopLoop27	4 / 4	2	95	●		:
DrPc	HipHp	5268	MA_HipHopLoop28	4 / 4	4	100	●		:
DrPc	HipHp	5269	MA_HipHopLoop29	4 / 4	4	75	●		:
DrPc	HipHp	5270	MA_HipHopLoop30	4 / 4	2	96	●		:
DrPc	HipHp	5271	MA_HipHopLoop31	4 / 4	2	93	●		:
DrPc	HipHp	5272	MA_HipHopLoop32	4 / 4	2	94	●		:
DrPc	HipHp	5273	MA_HipHopLoop33	4 / 4	2	100	●		:
DrPc	HipHp	5274	MA_HipHopLoop34	4 / 4	2	88	●		:
DrPc	HipHp	5275	MA_HipHopLoop35	4 / 4	4	85	●		:
DrPc	HipHp	5276	MA_HipHopLoop36	4 / 4	4	90	●		:
DrPc	HipHp	5277	MA_HipHopLoop37	4 / 4	4	85	●		:
DrPc	HipHp	5278	MA_HipHopLoop38	4 / 4	4	98	●		:
DrPc	HipHp	5279	MA_HipHopLoop39	4 / 4	4	95	●		:
DrPc	HipHp	5280	MA_HipHopLoop40	4 / 4	2	100	●		:
DrPc	HipHp	5281	MA_HipHopLoop41	4 / 4	2	96	●		:
DrPc	HipHp	5282	MA_HipHopLoop42	4 / 4	4	100	●		:
DrPc	HipHp	5283	MA_HipHopLoop43	4 / 4	4	98	●		:
DrPc	HipHp	5284	MA_HipHopLoop44	4 / 4	4	97	●		:
DrPc	HipHp	5285	MA_HipHopLoop45	4 / 4	4	97	●		:
DrPc	HipHp	5286	MA_HipHopLoop46	4 / 4	4	95	●		:
DrPc	HipHp	5287	MA_HipHopLoop47	4 / 4	4	100	●		:
DrPc	HipHp	5288	MA_HipHopLoop48	4 / 4	4	85	●		:
DrPc	HipHp	5289	MA_HipHopLoop49	4 / 4	2	88	●		:
DrPc	HipHp	5290	MA_HipHopLoop50	4 / 4	4	86	●		:
DrPc	HipHp	5291	MA_HipHopLoop51	4 / 4	4	97	●		:
DrPc	HipHp	5292	MA_HipHopLoop52	4 / 4	4	95	●		:
DrPc	HipHp	5293	MA_HipHopLoop53	4 / 4	2	94	●		:
DrPc	HipHp	5294	MA_HipHopLoop54	4 / 4	2	80	●		:
DrPc	HipHp	5295	MA_HipHopLoop55	4 / 4	4	96	●		:
DrPc	HipHp	5296	MA_HipHopLoop56	4 / 4	4	80	●		:
DrPc	HipHp	5297	MA_HipHopLoop57	4 / 4	4	80	●		:
DrPc	HipHp	5298	MA_HipHopLoop58	4 / 4	4	78	●		:
DrPc	HipHp	5299	MA_HipHopLoop59	4 / 4	4	90	●		:
DrPc	HipHp	5300	MA_ChillKitHip1	4 / 4	2	90	●		"Chill Out Kit"
DrPc	HipHp	5301	MA_ChillKitHip2	4 / 4	2	90	●		"8Z Chilly Breakz"
DrPc	HipHp	5302	MA_ChillKitHip3	4 / 4	2	90	●		"Chill Out Kit"
DrPc	HipHp	5303	MA_ChillKitHip4	4 / 4	2	90	●		:
DrPc	HipHp	5304	MA_8Z HeavyHip1	4 / 4	2	90	●		"8Z Glitch"
DrPc	HipHp	5305	MA_8Z HeavyHip2	4 / 4	2	90	●		:
DrPc	HipHp	5306	MA_8Z ElectrHp1	4 / 4	4	90	●		"8Z Heavy Hearts"

Main Category	Sub Category	ARP No.	ARP Name	Time Signature	Length	Original Tempo	Accent	Random SFX	Voice Type
DrPc	HipHp	5307	MA_8Z ElectrHp2	4 / 4	2	90	●		"8Z Heavy Hearts"
DrPc	R&B-M	5308	MA_Slow & Easy	4 / 4	4	72	●		"Power Standard Kit 1"
DrPc	R&B-M	5309	MB_Slow & Easy	4 / 4	4	72	●		:
DrPc	R&B-M	5310	MC_Slow & Easy	4 / 4	4	72	●		:
DrPc	R&B-M	5311	FA_Slow & Easy	4 / 4	1	72	●		:
DrPc	R&B-M	5312	FB_Slow & Easy	4 / 4	1	72	●		:
DrPc	R&B-M	5313	FC_Slow & Easy	4 / 4	1	72	●		:
DrPc	R&B-M	5314	BA_Slow & Easy	4 / 4	1	72	●		:
DrPc	R&B-M	5315	EA_Slow & Easy	4 / 4	3	72	●		:
DrPc	R&B-M	5316	EB_Slow & Easy	4 / 4	4	72	●		:
DrPc	R&B-M	5317	MA_Pop Shuffle1	4 / 4	4	94	●		:
DrPc	R&B-M	5318	MB_Pop Shuffle1	4 / 4	4	94	●		:
DrPc	R&B-M	5319	MC_Pop Shuffle1	4 / 4	4	94	●		:
DrPc	R&B-M	5320	FA_Pop Shuffle1	4 / 4	1	94	●		:
DrPc	R&B-M	5321	FB_Pop Shuffle1	4 / 4	1	94	●		:
DrPc	R&B-M	5322	FC_Pop Shuffle1	4 / 4	1	94	●		:
DrPc	R&B-M	5323	BA_Pop Shuffle1	4 / 4	1	94	●		:
DrPc	R&B-M	5324	MA_Pop Shuffle2	4 / 4	4	80	●		"R&B Kit 3"
DrPc	R&B-M	5325	MB_Pop Shuffle2	4 / 4	4	80	●		:
DrPc	R&B-M	5326	MC_Pop Shuffle2	4 / 4	4	80	●		:
DrPc	R&B-M	5327	FA_Pop Shuffle2	4 / 4	1	80	●		:
DrPc	R&B-M	5328	FB_Pop Shuffle2	4 / 4	1	80	●		:
DrPc	R&B-M	5329	FC_Pop Shuffle2	4 / 4	1	80	●		:
DrPc	R&B-M	5330	BA_Pop Shuffle2	4 / 4	1	80	●		:
DrPc	R&B-M	5331	MA_R&B Disco	4 / 4	2	110	●		"Dry Standard Kit"
DrPc	R&B-M	5332	MB_R&B Disco	4 / 4	2	110	●		:
DrPc	R&B-M	5333	MC_R&B Disco	4 / 4	2	110	●		:
DrPc	R&B-M	5334	MD_R&B Disco	4 / 4	2	110	●		:
DrPc	R&B-M	5335	IA_R&B Disco	4 / 4	1	110	●		:
DrPc	R&B-M	5336	FA_R&B Disco	4 / 4	1	110	●		:
DrPc	R&B-M	5337	FB_R&B Disco	4 / 4	1	110	●		:
DrPc	R&B-M	5338	FC_R&B Disco	4 / 4	2	110	●		:
DrPc	R&B-M	5339	MA_Chart R&B	4 / 4	4	130	●		"R&B Kit 1"
DrPc	R&B-M	5340	MB_Chart R&B	4 / 4	4	130	●		:
DrPc	R&B-M	5341	MC_Chart R&B	4 / 4	4	130	●		:
DrPc	R&B-M	5342	FA_Chart R&B	4 / 4	1	130	●		:
DrPc	R&B-M	5343	FB_Chart R&B	4 / 4	1	130	●		:
DrPc	R&B-M	5344	FC_Chart R&B	4 / 4	1	130	●		:
DrPc	R&B-M	5345	BA_Chart R&B	4 / 4	1	130	●		:
DrPc	R&B-M	5346	EA_Chart R&B	4 / 4	5	130	●		:
DrPc	R&B-M	5347	EB_Chart R&B	4 / 4	10	130	●		:
DrPc	R&B-M	5348	MA1_ChartPop1	4 / 4	4	92	●		"Hip Hop Kit 3"
DrPc	R&B-M	5349	MB1_ChartPop1	4 / 4	4	92	●		:
DrPc	R&B-M	5350	MC1_ChartPop1	4 / 4	4	92	●		:
DrPc	R&B-M	5351	FA1_ChartPop1	4 / 4	1	92	●		:
DrPc	R&B-M	5352	FB1_ChartPop1	4 / 4	1	92	●		:
DrPc	R&B-M	5353	FC1_ChartPop1	4 / 4	1	92	●		:
DrPc	R&B-M	5354	BA1_ChartPop1	4 / 4	1	92	●		:
DrPc	R&B-M	5355	EA1_ChartPop1	4 / 4	3	92	●		:
DrPc	R&B-M	5356	EB1_ChartPop1	4 / 4	3	92	●		:
DrPc	R&B-M	5357	MA2_ChartPop1	4 / 4	4	92	●		"Power Standard Kit 2"
DrPc	R&B-M	5358	MB2_ChartPop1	4 / 4	4	92	●		:
DrPc	R&B-M	5359	MC2_ChartPop1	4 / 4	4	92	●		:
DrPc	R&B-M	5360	FA2_ChartPop1	4 / 4	1	92	●		:
DrPc	R&B-M	5361	FB2_ChartPop1	4 / 4	1	92	●		:
DrPc	R&B-M	5362	FC2_ChartPop1	4 / 4	1	92	●		:
DrPc	R&B-M	5363	BA2_ChartPop1	4 / 4	1	92	●		:
DrPc	R&B-M	5364	EA2_ChartPop1	4 / 4	3	92	●		:
DrPc	R&B-M	5365	EB2_ChartPop1	4 / 4	3	92	●		:
DrPc	R&B-M	5366	MA1_ChartPop2	4 / 4	2	92	●		"Hip Hop Kit 3"
DrPc	R&B-M	5367	MB1_ChartPop2	4 / 4	2	92	●		:
DrPc	R&B-M	5368	MC1_ChartPop2	4 / 4	2	92	●		:
DrPc	R&B-M	5369	MD1_ChartPop2	4 / 4	2	92	●		:
DrPc	R&B-M	5370	FA1_ChartPop2	4 / 4	1	92	●		:
DrPc	R&B-M	5371	FC1_ChartPop2	4 / 4	1	92	●		:
DrPc	R&B-M	5372	FD1_ChartPop2	4 / 4	1	92	●		:
DrPc	R&B-M	5373	MA2_ChartPop2	4 / 4	2	92	●		"Hip Hop Kit 1"
DrPc	R&B-M	5374	MB2_ChartPop2	4 / 4	2	92	●		:
DrPc	R&B-M	5375	MC2_ChartPop2	4 / 4	2	92	●		:
DrPc	R&B-M	5376	MD2_ChartPop2	4 / 4	2	92	●		:
DrPc	R&B-M	5377	FA2_ChartPop2	4 / 4	1	92	●		:
DrPc	R&B-M	5378	FB2_ChartPop2	4 / 4	1	92	●		:
DrPc	R&B-M	5379	FC2_ChartPop2	4 / 4	1	92	●		:
DrPc	R&B-M	5380	FD2_ChartPop2	4 / 4	1	92	●		:
DrPc	R&B-M	5381	MA1_R&B	4 / 4	2	83	●		"Power Standard Kit 1"
DrPc	R&B-M	5382	MB1_R&B	4 / 4	2	83	●		:
DrPc	R&B-M	5383	MC1_R&B	4 / 4	2	83	●		:
DrPc	R&B-M	5384	FA1_R&B	4 / 4	1	83	●		:
DrPc	R&B-M	5385	FB1_R&B	4 / 4	1	83	●		:
DrPc	R&B-M	5386	FC1_R&B	4 / 4	1	83	●		:
DrPc	R&B-M	5387	BA1_R&B	4 / 4	1	83	●		:
DrPc	R&B-M	5388	EA1_R&B	4 / 4	4	83	●		:
DrPc	R&B-M	5389	EB1_R&B	4 / 4	4	83	●		:

Main Category	Sub Category	ARP No.	ARP Name	Time Signature	Length	Original Tempo	Accent	Random SFX	Voice Type
DrPc	R&B-M	5390	MA2_R&B	4 / 4	2	83	●		"R&B Kit 1"
DrPc	R&B-M	5391	MB2_R&B	4 / 4	2	83	●		:
DrPc	R&B-M	5392	MC2_R&B	4 / 4	2	83	●		:
DrPc	R&B-M	5393	FA2_R&B	4 / 4	1	83	●		:
DrPc	R&B-M	5394	FB2_R&B	4 / 4	1	83	●		:
DrPc	R&B-M	5395	FC2_R&B	4 / 4	1	83	●		:
DrPc	R&B-M	5396	BA2_R&B	4 / 4	1	83	●		:
DrPc	R&B-M	5397	EA2_R&B	4 / 4	4	83	●		:
DrPc	R&B-M	5398	EB2_R&B	4 / 4	4	83	●		:
DrPc	R&B-M	5399	MA1_New R&B 1	4 / 4	2	98	●		"Power Standard Kit 1"
DrPc	R&B-M	5400	MB1_New R&B 1	4 / 4	2	98	●		:
DrPc	R&B-M	5401	MC1_New R&B 1	4 / 4	2	98	●		:
DrPc	R&B-M	5402	FA1_New R&B 1	4 / 4	1	98	●		:
DrPc	R&B-M	5403	FB1_New R&B 1	4 / 4	1	98	●		:
DrPc	R&B-M	5404	FC1_New R&B 1	4 / 4	1	98	●		:
DrPc	R&B-M	5405	BA1_New R&B 1	4 / 4	1	98	●		:
DrPc	R&B-M	5406	EA1_New R&B 1	4 / 4	3	98	●		:
DrPc	R&B-M	5407	EB1_New R&B 1	4 / 4	4	98	●		:
DrPc	R&B-M	5408	MA2_New R&B 1	4 / 4	2	98	●		"R&B Kit 2"
DrPc	R&B-M	5409	MB2_New R&B 1	4 / 4	2	98	●		:
DrPc	R&B-M	5410	MC2_New R&B 1	4 / 4	2	98	●		:
DrPc	R&B-M	5411	FA2_New R&B 1	4 / 4	1	98	●		:
DrPc	R&B-M	5412	FB2_New R&B 1	4 / 4	1	98	●		:
DrPc	R&B-M	5413	FC2_New R&B 1	4 / 4	1	98	●		:
DrPc	R&B-M	5414	BA2_New R&B 1	4 / 4	1	98	●		:
DrPc	R&B-M	5415	EA2_New R&B 1	4 / 4	3	98	●		:
DrPc	R&B-M	5416	EB2_New R&B 1	4 / 4	4	98	●		:
DrPc	R&B-M	5417	MA1_New R&B 2	4 / 4	1	97	●		"Hip Hop Kit 3"
DrPc	R&B-M	5418	MB1_New R&B 2	4 / 4	1	97	●		:
DrPc	R&B-M	5419	MC1_New R&B 2	4 / 4	1	97	●		:
DrPc	R&B-M	5420	MD1_New R&B 2	4 / 4	1	97	●		:
DrPc	R&B-M	5421	IA1_New R&B 2	4 / 4	2	97	●		:
DrPc	R&B-M	5422	FA1_New R&B 2	4 / 4	1	97	●		:
DrPc	R&B-M	5423	FB1_New R&B 2	4 / 4	1	97	●		:
DrPc	R&B-M	5424	FC1_New R&B 2	4 / 4	2	97	●		:
DrPc	R&B-M	5425	MA2_New R&B 3	4 / 4	2	90	●		:
DrPc	R&B-M	5426	MB2_New R&B 3	4 / 4	2	90	●		:
DrPc	R&B-M	5427	MC2_New R&B 3	4 / 4	2	90	●		:
DrPc	R&B-M	5428	MD2_New R&B 3	4 / 4	2	90	●		:
DrPc	R&B-M	5429	IA2_New R&B 3	4 / 4	2	90	●		:
DrPc	R&B-M	5430	FA2_New R&B 3	4 / 4	1	90	●		:
DrPc	R&B-M	5431	FB2_New R&B 3	4 / 4	1	90	●		:
DrPc	R&B-M	5432	FC2_New R&B 3	4 / 4	2	90	●		:
DrPc	R&B-M	5433	MA_Pop R&B	4 / 4	4	67	●		"Hip Hop Kit 1"
DrPc	R&B-M	5434	MB_Pop R&B	4 / 4	4	67	●		:
DrPc	R&B-M	5435	MC_Pop R&B	4 / 4	4	67	●		:
DrPc	R&B-M	5436	FA_Pop R&B	4 / 4	1	67	●		:
DrPc	R&B-M	5437	FB_Pop R&B	4 / 4	1	67	●		:
DrPc	R&B-M	5438	FC_Pop R&B	4 / 4	1	67	●		:
DrPc	R&B-M	5439	BA_Pop R&B	4 / 4	1	67	●		:
DrPc	R&B-M	5440	MA_H-R&B Pop	4 / 4	4	140	●		"R&B Kit 1"
DrPc	R&B-M	5441	MB_H-R&B Pop	4 / 4	4	140	●		:
DrPc	R&B-M	5442	MC_H-R&B Pop	4 / 4	4	140	●		:
DrPc	R&B-M	5443	FA_H-R&B Pop	4 / 4	1	140	●		:
DrPc	R&B-M	5444	FB_H-R&B Pop	4 / 4	1	140	●		:
DrPc	R&B-M	5445	FC_H-R&B Pop	4 / 4	1	140	●		:
DrPc	R&B-M	5446	BA_H-R&B Pop	4 / 4	1	140	●		:
DrPc	R&B-M	5447	MA_J-R&B Pop	4 / 4	4	100	●		"Hip Hop Kit 4"
DrPc	R&B-M	5448	MB_J-R&B Pop	4 / 4	4	100	●		:
DrPc	R&B-M	5449	MC_J-R&B Pop	4 / 4	4	100	●		:
DrPc	R&B-M	5450	FA_J-R&B Pop	4 / 4	1	100	●		:
DrPc	R&B-M	5451	FB_J-R&B Pop	4 / 4	1	100	●		:
DrPc	R&B-M	5452	FC_J-R&B Pop	4 / 4	1	100	●		:
DrPc	R&B-M	5453	BA_J-R&B Pop	4 / 4	1	100	●		:
DrPc	R&B-M	5454	MA_R&B Ana Pop	4 / 4	4	95	●		"Hip Hop Kit 1"
DrPc	R&B-M	5455	MB_R&B Ana Pop	4 / 4	4	95	●		:
DrPc	R&B-M	5456	MC_R&B Ana Pop	4 / 4	4	95	●		:
DrPc	R&B-M	5457	FA_R&B Ana Pop	4 / 4	1	95	●		:
DrPc	R&B-M	5458	FB_R&B Ana Pop	4 / 4	1	95	●		:
DrPc	R&B-M	5459	FC_R&B Ana Pop	4 / 4	1	95	●		:
DrPc	R&B-M	5460	BA_R&B Ana Pop	4 / 4	1	95	●		:
DrPc	R&B-M	5461	MA_R&B Ballad 1	4 / 4	4	70	●		"Hip Hop Kit 4"
DrPc	R&B-M	5462	MB_R&B Ballad 1	4 / 4	4	70	●		:
DrPc	R&B-M	5463	MC_R&B Ballad 1	4 / 4	4	70	●		:
DrPc	R&B-M	5464	FA_R&B Ballad 1	4 / 4	1	70	●		:
DrPc	R&B-M	5465	FB_R&B Ballad 1	4 / 4	1	70	●		:
DrPc	R&B-M	5466	FC_R&B Ballad 1	4 / 4	1	70	●		:
DrPc	R&B-M	5467	BA_R&B Ballad 1	4 / 4	1	70	●		:
DrPc	R&B-M	5468	MA1_R&B Ballad 2	4 / 4	2	60	●		"Hip Hop Kit 2"
DrPc	R&B-M	5469	MB1_R&B Ballad 2	4 / 4	2	60	●		:
DrPc	R&B-M	5470	MC1_R&B Ballad 2	4 / 4	2	60	●		:
DrPc	R&B-M	5471	MD1_R&B Ballad 2	4 / 4	2	60	●		:
DrPc	R&B-M	5472	FA1_R&B Ballad 2	4 / 4	1	60	●		:

Main Category	Sub Category	ARP No.	ARP Name	Time Signature	Length	Original Tempo	Accent	Random SFX	Voice Type
DrPc	R&B-M	5473	FB1_R&B Ballad 2	4 / 4	1	60	●		"Hip Hop Kit 2"
DrPc	R&B-M	5474	FC1_R&B Ballad 2	4 / 4	1	60	●		:
DrPc	R&B-M	5475	FD1_R&B Ballad 2	4 / 4	1	60	●		:
DrPc	R&B-M	5476	MA2_R&B Ballad 2	4 / 4	2	60	●		"Hip Hop Kit 1"
DrPc	R&B-M	5477	MB2_R&B Ballad 2	4 / 4	2	60	●		:
DrPc	R&B-M	5478	MC2_R&B Ballad 2	4 / 4	2	60	●		:
DrPc	R&B-M	5479	MD2_R&B Ballad 2	4 / 4	2	60	●		:
DrPc	R&B-M	5480	FA2_R&B Ballad 2	4 / 4	1	60	●		:
DrPc	R&B-M	5481	FB2_R&B Ballad 2	4 / 4	1	60	●		:
DrPc	R&B-M	5482	FC2_R&B Ballad 2	4 / 4	1	60	●		:
DrPc	R&B-M	5483	FD2_R&B Ballad 2	4 / 4	1	60	●		:
DrPc	R&B-M	5484	MA_R&B Ballad 3	4 / 4	4	113	●		"R&B Kit 2"
DrPc	R&B-M	5485	MB_R&B Ballad 3	4 / 4	4	113	●		:
DrPc	R&B-M	5486	MC_R&B Ballad 3	4 / 4	4	113	●		:
DrPc	R&B-M	5487	FA_R&B Ballad 3	4 / 4	1	113	●		:
DrPc	R&B-M	5488	FB_R&B Ballad 3	4 / 4	1	113	●		:
DrPc	R&B-M	5489	FC_R&B Ballad 3	4 / 4	1	113	●		:
DrPc	R&B-M	5490	BA_R&B Ballad 3	4 / 4	1	113	●		:
DrPc	R&B-M	5491	MA_6/8 R&B	4 / 4	2	61	●		"Hip Hop Kit 3"
DrPc	R&B-M	5492	MB_6/8 R&B	4 / 4	2	61	●		:
DrPc	R&B-M	5493	MC_6/8 R&B	4 / 4	2	61	●		:
DrPc	R&B-M	5494	MD_6/8 R&B	4 / 4	2	61	●		:
DrPc	R&B-M	5495	IA_6/8 R&B	4 / 4	2	61	●		:
DrPc	R&B-M	5496	FA_6/8 R&B	4 / 4	1	61	●		:
DrPc	R&B-M	5497	FB_6/8 R&B	4 / 4	1	61	●		:
DrPc	R&B-M	5498	FC_6/8 R&B	4 / 4	2	61	●		:
DrPc	R&B-M	5499	MA_Smooth 1	4 / 4	2	115	●		:
DrPc	R&B-M	5500	MB_Smooth 1	4 / 4	2	115	●		:
DrPc	R&B-M	5501	MC_Smooth 1	4 / 4	2	115	●		:
DrPc	R&B-M	5502	MD_Smooth 1	4 / 4	2	115	●		:
DrPc	R&B-M	5503	IA_Smooth 1	4 / 4	2	115	●		:
DrPc	R&B-M	5504	FA_Smooth 1	4 / 4	1	115	●		:
DrPc	R&B-M	5505	FB_Smooth 1	4 / 4	1	115	●		:
DrPc	R&B-M	5506	FC_Smooth 1	4 / 4	2	115	●		:
DrPc	R&B-M	5507	MA_Smooth 2	4 / 4	4	64	●		"Hip Hop Kit 1"
DrPc	R&B-M	5508	MB_Smooth 2	4 / 4	4	64	●		:
DrPc	R&B-M	5509	MC_Smooth 2	4 / 4	4	64	●		:
DrPc	R&B-M	5510	MD_Smooth 2	4 / 4	4	64	●		:
DrPc	R&B-M	5511	MA_Flip Hop 1	4 / 4	2	132	●		"Hip Hop Kit 3"
DrPc	R&B-M	5512	MB_Flip Hop 1	4 / 4	2	132	●		:
DrPc	R&B-M	5513	MC_Flip Hop 1	4 / 4	2	132	●		:
DrPc	R&B-M	5514	MD_Flip Hop 1	4 / 4	2	132	●		:
DrPc	R&B-M	5515	IA_Flip Hop 1	4 / 4	2	132	●		:
DrPc	R&B-M	5516	FA_Flip Hop 1	4 / 4	1	132	●		:
DrPc	R&B-M	5517	FB_Flip Hop 1	4 / 4	1	132	●		:
DrPc	R&B-M	5518	FC_Flip Hop 1	4 / 4	4	132	●		:
DrPc	R&B-M	5519	MA_Flip Hop 2	4 / 4	4	125	●		:
DrPc	R&B-M	5520	MB_Flip Hop 2	4 / 4	4	125	●		:
DrPc	R&B-M	5521	MC_Flip Hop 2	4 / 4	4	125	●		:
DrPc	R&B-M	5522	MD_Flip Hop 2	4 / 4	4	125	●		:
DrPc	R&B-M	5523	MA_New Gospel	4 / 4	2	90	●		:
DrPc	R&B-M	5524	MB_New Gospel	4 / 4	2	90	●		:
DrPc	R&B-M	5525	MC_New Gospel	4 / 4	2	90	●		:
DrPc	R&B-M	5526	MD_New Gospel	4 / 4	2	90	●		:
DrPc	R&B-M	5527	IA_New Gospel	4 / 4	1	90	●		:
DrPc	R&B-M	5528	FA_New Gospel	4 / 4	1	90	●		:
DrPc	R&B-M	5529	FB_New Gospel	4 / 4	1	90	●		:
DrPc	R&B-M	5530	FC_New Gospel	4 / 4	2	90	●		:
DrPc	R&B-C	5531	MA1_StandrdDisco	4 / 4	4	120	●		"Power Standard Kit 2"
DrPc	R&B-C	5532	MB1_StandrdDisco	4 / 4	4	120	●		:
DrPc	R&B-C	5533	MC1_StandrdDisco	4 / 4	4	120	●		:
DrPc	R&B-C	5534	FA1_StandrdDisco	4 / 4	1	120	●		:
DrPc	R&B-C	5535	FB1_StandrdDisco	4 / 4	1	120	●		:
DrPc	R&B-C	5536	FC1_StandrdDisco	4 / 4	1	120	●		:
DrPc	R&B-C	5537	BA1_StandrdDisco	4 / 4	1	120	●		:
DrPc	R&B-C	5538	EA1_StandrdDisco	4 / 4	3	120	●		:
DrPc	R&B-C	5539	EB1_StandrdDisco	4 / 4	3	120	●		:
DrPc	R&B-C	5540	MA2_StandrdDisco	4 / 4	4	120	●		"Pop Latin Kit"
DrPc	R&B-C	5541	MB2_StandrdDisco	4 / 4	4	120	●		:
DrPc	R&B-C	5542	MC2_StandrdDisco	4 / 4	4	120	●		:
DrPc	R&B-C	5543	FA2_StandrdDisco	4 / 4	1	120	●		:
DrPc	R&B-C	5544	FB2_StandrdDisco	4 / 4	1	120	●		:
DrPc	R&B-C	5545	FC2_StandrdDisco	4 / 4	1	120	●		:
DrPc	R&B-C	5546	BA2_StandrdDisco	4 / 4	1	120	●		:
DrPc	R&B-C	5547	EA2_StandrdDisco	4 / 4	3	120	●		:
DrPc	R&B-C	5548	EB2_StandrdDisco	4 / 4	3	120	●		:
DrPc	R&B-C	5549	MA1_Retro Disco	4 / 4	4	108	●		"Power Standard Kit 1"
DrPc	R&B-C	5550	MB1_Retro Disco	4 / 4	4	108	●		:
DrPc	R&B-C	5551	MC1_Retro Disco	4 / 4	4	108	●		:
DrPc	R&B-C	5552	FA1_Retro Disco	4 / 4	1	108	●		:
DrPc	R&B-C	5553	FB1_Retro Disco	4 / 4	1	108	●		:
DrPc	R&B-C	5554	FC1_Retro Disco	4 / 4	1	108	●		:
DrPc	R&B-C	5555	BA1_Retro Disco	4 / 4	1	108	●		:

Main Category	Sub Category	ARP No.	ARP Name	Time Signature	Length	Original Tempo	Accent	Random SFX	Voice Type
DrPc	R&B-C	5556	EA1_Retro Disco	4 / 4	4	108	●		"Power Standard Kit 1"
DrPc	R&B-C	5557	EB1_Retro Disco	4 / 4	4	108	●		:
DrPc	R&B-C	5558	MA2_Retro Disco	4 / 4	4	108	●		"Pop Latin Kit"
DrPc	R&B-C	5559	MB2_Retro Disco	4 / 4	4	108	●		:
DrPc	R&B-C	5560	MC2_Retro Disco	4 / 4	4	108	●		:
DrPc	R&B-C	5561	FA2_Retro Disco	4 / 4	1	108	●		:
DrPc	R&B-C	5562	FB2_Retro Disco	4 / 4	1	108	●		:
DrPc	R&B-C	5563	FC2_Retro Disco	4 / 4	1	108	●		:
DrPc	R&B-C	5564	BA2_Retro Disco	4 / 4	1	108	●		:
DrPc	R&B-C	5565	EA2_Retro Disco	4 / 4	4	108	●		:
DrPc	R&B-C	5566	EB2_Retro Disco	4 / 4	4	108	●		:
DrPc	R&B-C	5567	MA1_70sCoolDisco	4 / 4	4	114	●		"Power Standard Kit 1"
DrPc	R&B-C	5568	MB1_70sCoolDisco	4 / 4	4	114	●		:
DrPc	R&B-C	5569	MC1_70sCoolDisco	4 / 4	4	114	●		:
DrPc	R&B-C	5570	FA1_70sCoolDisco	4 / 4	1	114	●		:
DrPc	R&B-C	5571	FB1_70sCoolDisco	4 / 4	1	114	●		:
DrPc	R&B-C	5572	FC1_70sCoolDisco	4 / 4	1	114	●		:
DrPc	R&B-C	5573	BA1_70sCoolDisco	4 / 4	1	114	●		:
DrPc	R&B-C	5574	EA1_70sCoolDisco	4 / 4	4	114	●		:
DrPc	R&B-C	5575	EB1_70sCoolDisco	4 / 4	3	114	●		:
DrPc	R&B-C	5576	MA2_70sCoolDisco	4 / 4	4	114	●		"Pop Latin Kit"
DrPc	R&B-C	5577	MB2_70sCoolDisco	4 / 4	4	114	●		:
DrPc	R&B-C	5578	MC2_70sCoolDisco	4 / 4	4	114	●		:
DrPc	R&B-C	5579	FA2_70sCoolDisco	4 / 4	1	114	●		:
DrPc	R&B-C	5580	FB2_70sCoolDisco	4 / 4	1	114	●		:
DrPc	R&B-C	5581	FC2_70sCoolDisco	4 / 4	1	114	●		:
DrPc	R&B-C	5582	BA2_70sCoolDisco	4 / 4	1	114	●		:
DrPc	R&B-C	5583	EA2_70sCoolDisco	4 / 4	4	114	●		:
DrPc	R&B-C	5584	EB2_70sCoolDisco	4 / 4	3	114	●		:
DrPc	R&B-C	5585	MA_Philadelphia	4 / 4	2	100	●		"Power Standard Kit 1"
DrPc	R&B-C	5586	MB_Philadelphia	4 / 4	2	100	●		:
DrPc	R&B-C	5587	MC_Philadelphia	4 / 4	2	100	●		:
DrPc	R&B-C	5588	FA_Philadelphia	4 / 4	1	100	●		:
DrPc	R&B-C	5589	FB_Philadelphia	4 / 4	1	100	●		:
DrPc	R&B-C	5590	FC_Philadelphia	4 / 4	1	100	●		:
DrPc	R&B-C	5591	BA_Philadelphia	4 / 4	1	100	●		:
DrPc	R&B-C	5592	EA_Philadelphia	4 / 4	4	100	●		:
DrPc	R&B-C	5593	EB_Philadelphia	4 / 4	3	100	●		:
DrPc	R&B-C	5594	MA_Soul 1	4 / 4	2	116	●		:
DrPc	R&B-C	5595	MB_Soul 1	4 / 4	2	116	●		:
DrPc	R&B-C	5596	MC_Soul 1	4 / 4	2	116	●		:
DrPc	R&B-C	5597	FA_Soul 1	4 / 4	1	116	●		:
DrPc	R&B-C	5598	FB_Soul 1	4 / 4	1	116	●		:
DrPc	R&B-C	5599	FC_Soul 1	4 / 4	1	116	●		:
DrPc	R&B-C	5600	BA_Soul 1	4 / 4	1	116	●		:
DrPc	R&B-C	5601	EA_Soul 1	4 / 4	4	116	●		:
DrPc	R&B-C	5602	EB_Soul 1	4 / 4	3	116	●		:
DrPc	R&B-C	5603	MA_Soul 2	4 / 4	4	120	●		"Dry Standard Kit"
DrPc	R&B-C	5604	MB_Soul 2	4 / 4	4	120	●		:
DrPc	R&B-C	5605	MC_Soul 2	4 / 4	4	120	●		:
DrPc	R&B-C	5606	MD_Soul 2	4 / 4	4	120	●		:
DrPc	R&B-C	5607	IA_Soul 2	4 / 4	1	120	●		:
DrPc	R&B-C	5608	FA_Soul 2	4 / 4	1	120	●		:
DrPc	R&B-C	5609	FB_Soul 2	4 / 4	1	120	●		:
DrPc	R&B-C	5610	FC_Soul 2	4 / 4	4	120	●		:
DrPc	R&B-C	5611	MA1_Soul 3	4 / 4	4	88	●		"Hip Hop Kit 3"
DrPc	R&B-C	5612	MB1_Soul 3	4 / 4	4	88	●		:
DrPc	R&B-C	5613	MC1_Soul 3	4 / 4	4	88	●		:
DrPc	R&B-C	5614	MD1_Soul 3	4 / 4	4	88	●		:
DrPc	R&B-C	5615	FA1_Soul 3	4 / 4	1	88	●		:
DrPc	R&B-C	5616	FB1_Soul 3	4 / 4	1	88	●		:
DrPc	R&B-C	5617	FC1_Soul 3	4 / 4	1	88	●		:
DrPc	R&B-C	5618	FD1_Soul 3	4 / 4	1	88	●		:
DrPc	R&B-C	5619	MA2_Soul 3	4 / 4	4	88	●		"Hip Hop Kit 1"
DrPc	R&B-C	5620	MB2_Soul 3	4 / 4	4	88	●		:
DrPc	R&B-C	5621	MC2_Soul 3	4 / 4	4	88	●		:
DrPc	R&B-C	5622	MD2_Soul 3	4 / 4	4	88	●		:
DrPc	R&B-C	5623	FA2_Soul 3	4 / 4	1	88	●		:
DrPc	R&B-C	5624	FB2_Soul 3	4 / 4	1	88	●		:
DrPc	R&B-C	5625	FC2_Soul 3	4 / 4	1	88	●		:
DrPc	R&B-C	5626	FD2_Soul 3	4 / 4	1	88	●		:
DrPc	R&B-C	5627	MA_70sChartSoul	4 / 4	2	108	●		"Power Standard Kit 2"
DrPc	R&B-C	5628	MB_70sChartSoul	4 / 4	2	108	●		:
DrPc	R&B-C	5629	MC_70sChartSoul	4 / 4	2	108	●		:
DrPc	R&B-C	5630	FA_70sChartSoul	4 / 4	1	108	●		:
DrPc	R&B-C	5631	FB_70sChartSoul	4 / 4	1	108	●		:
DrPc	R&B-C	5632	FC_70sChartSoul	4 / 4	1	108	●		:
DrPc	R&B-C	5633	BA_70sChartSoul	4 / 4	1	108	●		:
DrPc	R&B-C	5634	EA_70sChartSoul	4 / 4	5	108	●		:
DrPc	R&B-C	5635	EB_70sChartSoul	4 / 4	3	108	●		:
DrPc	R&B-C	5636	MA_Frankly Soul	4 / 4	4	120	●		"Power Standard Kit 1"
DrPc	R&B-C	5637	MB_Frankly Soul	4 / 4	4	120	●		:
DrPc	R&B-C	5638	MC_Frankly Soul	4 / 4	4	120	●		:

Main Category	Sub Category	ARP No.	ARP Name	Time Signature	Length	Original Tempo	Accent	Random SFX	Voice Type
DrPc	R&B-C	5639	FA_Frankly Soul	4 / 4	1	120	●		"Power Standard Kit 1"
DrPc	R&B-C	5640	FB_Frankly Soul	4 / 4	1	120	●		:
DrPc	R&B-C	5641	FC_Frankly Soul	4 / 4	1	120	●		:
DrPc	R&B-C	5642	BA_Frankly Soul	4 / 4	1	120	●		:
DrPc	R&B-C	5643	EA_Frankly Soul	4 / 4	3	120	●		:
DrPc	R&B-C	5644	EB_Frankly Soul	4 / 4	4	120	●		:
DrPc	R&B-C	5645	MA_Soul Beat	4 / 4	4	124	●		:
DrPc	R&B-C	5646	MB_Soul Beat	4 / 4	4	124	●		:
DrPc	R&B-C	5647	MC_Soul Beat	4 / 4	4	124	●		:
DrPc	R&B-C	5648	FA_Soul Beat	4 / 4	1	124	●		:
DrPc	R&B-C	5649	FB_Soul Beat	4 / 4	1	124	●		:
DrPc	R&B-C	5650	FC_Soul Beat	4 / 4	1	124	●		:
DrPc	R&B-C	5651	BA_Soul Beat	4 / 4	1	124	●		:
DrPc	R&B-C	5652	EA_Soul Beat	4 / 4	3	123	●		:
DrPc	R&B-C	5653	EB_Soul Beat	4 / 4	3	123	●		:
DrPc	R&B-C	5654	MA_Soul Band	4 / 4	4	129	●		"Power Standard Kit 2"
DrPc	R&B-C	5655	MB_Soul Band	4 / 4	4	129	●		:
DrPc	R&B-C	5656	MC_Soul Band	4 / 4	4	129	●		:
DrPc	R&B-C	5657	FA_Soul Band	4 / 4	1	129	●		:
DrPc	R&B-C	5658	FB_Soul Band	4 / 4	1	129	●		:
DrPc	R&B-C	5659	FC_Soul Band	4 / 4	1	129	●		:
DrPc	R&B-C	5660	BA_Soul Band	4 / 4	1	129	●		:
DrPc	R&B-C	5661	MA_Soul Shuffle	4 / 4	4	98	●		:
DrPc	R&B-C	5662	MB_Soul Shuffle	4 / 4	4	98	●		:
DrPc	R&B-C	5663	MC_Soul Shuffle	4 / 4	4	98	●		:
DrPc	R&B-C	5664	FA_Soul Shuffle	4 / 4	1	98	●		:
DrPc	R&B-C	5665	FB_Soul Shuffle	4 / 4	1	98	●		:
DrPc	R&B-C	5666	FC_Soul Shuffle	4 / 4	1	98	●		:
DrPc	R&B-C	5667	BA_Soul Shuffle	4 / 4	1	98	●		:
DrPc	R&B-C	5668	EA_Soul Shuffle	4 / 4	3	98	●		:
DrPc	R&B-C	5669	EB_Soul Shuffle	4 / 4	3	98	●		:
DrPc	R&B-C	5670	MA_Soul Swing	4 / 4	4	124	●		"Power Standard Kit 1"
DrPc	R&B-C	5671	MB_Soul Swing	4 / 4	4	124	●		:
DrPc	R&B-C	5672	MC_Soul Swing	4 / 4	4	124	●		:
DrPc	R&B-C	5673	FA_Soul Swing	4 / 4	1	124	●		:
DrPc	R&B-C	5674	FB_Soul Swing	4 / 4	1	124	●		:
DrPc	R&B-C	5675	FC_Soul Swing	4 / 4	1	124	●		:
DrPc	R&B-C	5676	BA_Soul Swing	4 / 4	1	124	●		:
DrPc	R&B-C	5677	EA_Soul Swing	4 / 4	3	123	●		:
DrPc	R&B-C	5678	EB_Soul Swing	4 / 4	5	123	●		:
DrPc	R&B-C	5679	MA_GospelBrothr	4 / 4	4	108	●		:
DrPc	R&B-C	5680	MB_GospelBrothr	4 / 4	4	108	●		:
DrPc	R&B-C	5681	MC_GospelBrothr	4 / 4	4	108	●		:
DrPc	R&B-C	5682	FA_GospelBrothr	4 / 4	1	108	●		:
DrPc	R&B-C	5683	FB_GospelBrothr	4 / 4	1	108	●		:
DrPc	R&B-C	5684	FC_GospelBrothr	4 / 4	1	108	●		:
DrPc	R&B-C	5685	BA_GospelBrothr	4 / 4	1	108	●		:
DrPc	R&B-C	5686	EA_GospelBrothr	4 / 4	4	108	●		:
DrPc	R&B-C	5687	EB_GospelBrothr	4 / 4	3	108	●		:
DrPc	R&B-C	5688	MA_Gospel	3 / 4	4	126	●		"Dry Standard Kit"
DrPc	R&B-C	5689	MB_Gospel	3 / 4	2	126	●		:
DrPc	Funk	5690	MA_Funk 1	4 / 4	8	104	●		"Power Standard Kit 1"
DrPc	Funk	5691	MB_Funk 1	4 / 4	8	104	●		:
DrPc	Funk	5692	MC_Funk 1	4 / 4	8	104	●		:
DrPc	Funk	5693	FA_Funk 1	4 / 4	1	104	●		:
DrPc	Funk	5694	FB_Funk 1	4 / 4	1	104	●		:
DrPc	Funk	5695	FC_Funk 1	4 / 4	1	104	●		:
DrPc	Funk	5696	BA_Funk 1	4 / 4	1	104	●		:
DrPc	Funk	5697	EA_Funk 1	4 / 4	9	104	●		:
DrPc	Funk	5698	EB_Funk 1	4 / 4	4	104	●		:
DrPc	Funk	5699	MA_Funk 2 /1	4 / 4	4	107	●		"Hyper Standard Kit"
DrPc	Funk	5700	MB_Funk 2 /1	4 / 4	4	107	●		:
DrPc	Funk	5701	MC_Funk 2	4 / 4	4	107	●		:
DrPc	Funk	5702	MD_Funk 2	4 / 4	4	107	●		:
DrPc	Funk	5703	IA_Funk 2	4 / 4	4	107	●		:
DrPc	Funk	5704	FA_Funk 2	4 / 4	1	107	●		:
DrPc	Funk	5705	FB_Funk 2 /1	4 / 4	1	107	●		:
DrPc	Funk	5706	FC_Funk 2 /1	4 / 4	1	107	●		:
DrPc	Funk	5707	MA_Funk 2 /2	4 / 4	2	107	●		:
DrPc	Funk	5708	MB_Funk 2 /2	4 / 4	4	107	●		:
DrPc	Funk	5709	FB_Funk 2 /2	4 / 4	1	107	●		:
DrPc	Funk	5710	FC_Funk 2 /2	4 / 4	1	107	●		:
DrPc	Funk	5711	MA_Funk 3	4 / 4	2	132	●		"Dry Standard Kit"
DrPc	Funk	5712	MB_Funk 3	4 / 4	2	132	●		:
DrPc	Funk	5713	MC_Funk 3	4 / 4	4	132	●		:
DrPc	Funk	5714	MD_Funk 3	4 / 4	4	132	●		:
DrPc	Funk	5715	IA_Funk 3	4 / 4	1	132	●		:
DrPc	Funk	5716	FA_Funk 3	4 / 4	1	132	●		:
DrPc	Funk	5717	FB_Funk 3	4 / 4	1	132	●		:
DrPc	Funk	5718	FC_Funk 3	4 / 4	2	132	●		:
DrPc	Funk	5719	MA_Funk 4	4 / 4	2	110	●		:
DrPc	Funk	5720	MB_Funk 4	4 / 4	2	110	●		:
DrPc	Funk	5721	MC_Funk 4	4 / 4	4	110	●		:

Main Category	Sub Category	ARP No.	ARP Name	Time Signature	Length	Original Tempo	Accent	Random SFX	Voice Type
DrPc	Funk	5722	MD_Funk 4	4 / 4	4	110	●		"Dry Standard Kit"
DrPc	Funk	5723	MA_Cool Funk	4 / 4	2	96	●		"Hyper Standard Kit"
DrPc	Funk	5724	MB_Cool Funk	4 / 4	2	96	●		:
DrPc	Funk	5725	MC_Cool Funk	4 / 4	2	96	●		:
DrPc	Funk	5726	MD_Cool Funk	4 / 4	2	96	●		:
DrPc	Funk	5727	IA_Cool Funk	4 / 4	2	96	●		:
DrPc	Funk	5728	FA_Cool Funk	4 / 4	1	96	●		:
DrPc	Funk	5729	FB_Cool Funk	4 / 4	1	96	●		:
DrPc	Funk	5730	FC_Cool Funk	4 / 4	2	96	●		:
DrPc	Funk	5731	MA_Funk PopRock	4 / 4	4	95	●		"Power Standard Kit 1"
DrPc	Funk	5732	MB_Funk PopRock	4 / 4	4	95	●		:
DrPc	Funk	5733	MC_Funk PopRock	4 / 4	4	95	●		:
DrPc	Funk	5734	FA_Funk PopRock	4 / 4	1	95	●		:
DrPc	Funk	5735	FB_Funk PopRock	4 / 4	1	95	●		:
DrPc	Funk	5736	FC_Funk PopRock	4 / 4	1	95	●		:
DrPc	Funk	5737	BA_Funk PopRock	4 / 4	1	95	●		:
DrPc	Funk	5738	EA_Funk PopRock	4 / 4	4	94	●		:
DrPc	Funk	5739	EB_Funk PopRock	4 / 4	3	94	●		:
DrPc	Funk	5740	MA_Jazz Funk 1	4 / 4	4	120	●		:
DrPc	Funk	5741	MB_Jazz Funk 1	4 / 4	4	120	●		:
DrPc	Funk	5742	MC_Jazz Funk 1	4 / 4	4	120	●		:
DrPc	Funk	5743	FA_Jazz Funk 1	4 / 4	1	120	●		:
DrPc	Funk	5744	FB_Jazz Funk 1	4 / 4	1	120	●		:
DrPc	Funk	5745	FC_Jazz Funk 1	4 / 4	1	120	●		:
DrPc	Funk	5746	BA_Jazz Funk 1	4 / 4	1	120	●		:
DrPc	Funk	5747	EA_Jazz Funk 1	4 / 4	3	120	●		:
DrPc	Funk	5748	EB_Jazz Funk 1	4 / 4	3	120	●		:
DrPc	Funk	5749	MA_Jazz Funk 2	4 / 4	4	120	●		"Dry Standard Kit"
DrPc	Funk	5750	MB_Jazz Funk 2	4 / 4	4	120	●		:
DrPc	Funk	5751	MC_Jazz Funk 2	4 / 4	4	120	●		:
DrPc	Funk	5752	MD_Jazz Funk 2	4 / 4	4	120	●		:
DrPc	Funk	5753	IA_Jazz Funk 2	4 / 4	2	120	●		:
DrPc	Funk	5754	FA_Jazz Funk 2	4 / 4	1	120	●		:
DrPc	Funk	5755	FB_Jazz Funk 2	4 / 4	1	120	●		:
DrPc	Funk	5756	FC_Jazz Funk 2	4 / 4	1	120	●		:
DrPc	Funk	5757	MA1_Jazz Funk 3	4 / 4	4	123	●		"Hip Hop Kit 1"
DrPc	Funk	5758	MB1_Jazz Funk 3	4 / 4	4	123	●		:
DrPc	Funk	5759	MC1_Jazz Funk 3	4 / 4	4	123	●		:
DrPc	Funk	5760	MD1_Jazz Funk 3	4 / 4	2	123	●		:
DrPc	Funk	5761	FA1_Jazz Funk 3	4 / 4	1	123	●		:
DrPc	Funk	5762	FB1_Jazz Funk 3	4 / 4	1	123	●		:
DrPc	Funk	5763	FC1_Jazz Funk 3	4 / 4	1	123	●		:
DrPc	Funk	5764	FD1_Jazz Funk 3	4 / 4	1	123	●		:
DrPc	Funk	5765	MA2_Jazz Funk 3	4 / 4	4	123	●		"Latin Percussion Kit"
DrPc	Funk	5766	MB2_Jazz Funk 3	4 / 4	4	123	●		:
DrPc	Funk	5767	MC2_Jazz Funk 3	4 / 4	4	123	●		:
DrPc	Funk	5768	MD2_Jazz Funk 3	4 / 4	2	123	●		:
DrPc	Funk	5769	FA2_Jazz Funk 3	4 / 4	1	123	●		:
DrPc	Funk	5770	FB2_Jazz Funk 3	4 / 4	1	123	●		:
DrPc	Funk	5771	FC2_Jazz Funk 3	4 / 4	1	123	●		:
DrPc	Funk	5772	FD2_Jazz Funk 3	4 / 4	1	123	●		:
DrPc	Funk	5773	MA_Jazz Pop	4 / 4	2	102	●		"Power Standard Kit 1"
DrPc	Funk	5774	MB_Jazz Pop	4 / 4	2	102	●		:
DrPc	Funk	5775	MC_Jazz Pop	4 / 4	2	102	●		:
DrPc	Funk	5776	FA_Jazz Pop	4 / 4	1	102	●		:
DrPc	Funk	5777	FB_Jazz Pop	4 / 4	1	102	●		:
DrPc	Funk	5778	FC_Jazz Pop	4 / 4	1	102	●		:
DrPc	Funk	5779	BA_Jazz Pop	4 / 4	1	102	●		:
DrPc	Funk	5780	MA_Club Jazz 1	4 / 4	4	125	●		:
DrPc	Funk	5781	MB_Club Jazz 1	4 / 4	4	125	●		:
DrPc	Funk	5782	MC_Club Jazz 1	4 / 4	4	125	●		:
DrPc	Funk	5783	FA_Club Jazz 1	4 / 4	1	125	●		:
DrPc	Funk	5784	FB_Club Jazz 1	4 / 4	1	125	●		:
DrPc	Funk	5785	FC_Club Jazz 1	4 / 4	1	125	●		:
DrPc	Funk	5786	BA_Club Jazz 1	4 / 4	1	125	●		:
DrPc	Funk	5787	MA_Club Jazz 2	4 / 4	4	92	●		:
DrPc	Funk	5788	MB_Club Jazz 2	4 / 4	4	92	●		:
DrPc	Funk	5789	MC_Club Jazz 2	4 / 4	4	92	●		:
DrPc	Funk	5790	FA_Club Jazz 2	4 / 4	1	92	●		:
DrPc	Funk	5791	FB_Club Jazz 2	4 / 4	1	92	●		:
DrPc	Funk	5792	FC_Club Jazz 2	4 / 4	1	92	●		:
DrPc	Funk	5793	BA_Club Jazz 2	4 / 4	1	92	●		:
DrPc	Funk	5794	MA_Gospel Funk	4 / 4	4	106	●		:
DrPc	Funk	5795	MB_Gospel Funk	4 / 4	4	106	●		:
DrPc	Funk	5796	MC_Gospel Funk	4 / 4	4	106	●		:
DrPc	Funk	5797	FA_Gospel Funk	4 / 4	1	106	●		:
DrPc	Funk	5798	FB_Gospel Funk	4 / 4	1	106	●		:
DrPc	Funk	5799	FC_Gospel Funk	4 / 4	1	106	●		:
DrPc	Funk	5800	BA_Gospel Funk	4 / 4	1	106	●		:
DrPc	Funk	5801	EA_Gospel Funk	4 / 4	4	106	●		:
DrPc	Funk	5802	EB_Gospel Funk	4 / 4	3	106	●		:
DrPc	Funk	5803	MA_Funk Disco	4 / 4	2	126	●		"Power Standard Kit 2"
DrPc	Funk	5804	MB_Funk Disco	4 / 4	2	126	●		:

Main Category	Sub Category	ARP No.	ARP Name	Time Signature	Length	Original Tempo	Accent	Random SFX	Voice Type
DrPc	Funk	5805	MC_Funk Disco	4 / 4	2	126	●		"Power Standard Kit 2"
DrPc	Funk	5806	FA_Funk Disco	4 / 4	1	126	●		:
DrPc	Funk	5807	FB_Funk Disco	4 / 4	1	126	●		:
DrPc	Funk	5808	FC_Funk Disco	4 / 4	1	126	●		:
DrPc	Funk	5809	BA_Funk Disco	4 / 4	1	126	●		:
DrPc	Funk	5810	EA_Funk Disco	4 / 4	4	126	●		:
DrPc	Funk	5811	EB_Funk Disco	4 / 4	3	126	●		:
DrPc	Funk	5812	MA_70sDiscoFunk	4 / 4	4	112	●		"Power Standard Kit 1"
DrPc	Funk	5813	MB_70sDiscoFunk	4 / 4	4	112	●		:
DrPc	Funk	5814	MC_70sDiscoFunk	4 / 4	4	112	●		:
DrPc	Funk	5815	FA_70sDiscoFunk	4 / 4	1	112	●		:
DrPc	Funk	5816	FB_70sDiscoFunk	4 / 4	1	112	●		:
DrPc	Funk	5817	FC_70sDiscoFunk	4 / 4	1	112	●		:
DrPc	Funk	5818	BA_70sDiscoFunk	4 / 4	1	112	●		:
DrPc	Funk	5819	EA_70sDiscoFunk	4 / 4	4	112	●		:
DrPc	Funk	5820	EB_70sDiscoFunk	4 / 4	3	112	●		:
DrPc	Funk	5821	MA_Oak Custom	4 / 4	2	114	●		"OakCustom Kit"
DrPc	Funk	5822	MB_Oak Custom	4 / 4	2	114	●		:
DrPc	Funk	5823	MC_Oak Custom	4 / 4	2	114	●		:
DrPc	Funk	5824	FB_Oak Custom	4 / 4	1	114	●		:
DrPc	Funk	5825	FC_Oak Custom	4 / 4	1	114	●		:
DrPc	Funk	5826	EA_Oak Custom	4 / 4	4	114	●		:
DrPc	Tekno	5827	MA1_8Z Undergrnd	4 / 4	4	100	●		"8Z Noize Xpress"
DrPc	Tekno	5828	MB1_8Z Undergrnd	4 / 4	4	100	●		:
DrPc	Tekno	5829	MC1_8Z Undergrnd	4 / 4	4	100	●		:
DrPc	Tekno	5830	FA1_8Z Undergrnd	4 / 4	1	100	●		:
DrPc	Tekno	5831	FB1_8Z Undergrnd	4 / 4	1	100	●		:
DrPc	Tekno	5832	FC1_8Z Undergrnd	4 / 4	1	100	●		:
DrPc	Tekno	5833	BA1_8Z Undergrnd	4 / 4	1	100	●		:
DrPc	Tekno	5834	MA2_8Z Undergrnd	4 / 4	4	100	●		"8Z Oxidized"
DrPc	Tekno	5835	MB2_8Z Undergrnd	4 / 4	4	100	●		:
DrPc	Tekno	5836	MC2_8Z Undergrnd	4 / 4	4	100	●		:
DrPc	Tekno	5837	FA2_8Z Undergrnd	4 / 4	1	100	●		:
DrPc	Tekno	5838	FB2_8Z Undergrnd	4 / 4	1	100	●		:
DrPc	Tekno	5839	FC2_8Z Undergrnd	4 / 4	1	100	●		:
DrPc	Tekno	5840	BA2_8Z Undergrnd	4 / 4	1	100	●		:
DrPc	Tekno	5841	MA3_Underground	4 / 4	4	100	●		"Acid Kit"
DrPc	Tekno	5842	MB3_Underground	4 / 4	4	100	●		:
DrPc	Tekno	5843	MC3_Underground	4 / 4	4	100	●		:
DrPc	Tekno	5844	FA3_Underground	4 / 4	1	100	●		:
DrPc	Tekno	5845	FB3_Underground	4 / 4	1	100	●		:
DrPc	Tekno	5846	FC3_Underground	4 / 4	1	100	●		:
DrPc	Tekno	5847	BA3_Underground	4 / 4	1	100	●		:
DrPc	Tekno	5848	MA4_Underground	4 / 4	4	100	●		"Hard Kit"
DrPc	Tekno	5849	MB4_Underground	4 / 4	4	100	●		:
DrPc	Tekno	5850	MC4_Underground	4 / 4	4	100	●		:
DrPc	Tekno	5851	FA4_Underground	4 / 4	1	100	●		:
DrPc	Tekno	5852	FB4_Underground	4 / 4	1	100	●		:
DrPc	Tekno	5853	FC4_Underground	4 / 4	1	100	●		:
DrPc	Tekno	5854	BA4_Underground	4 / 4	1	100	●		:
DrPc	Tekno	5855	MA_8Z Destruct	4 / 4	4	115	●		"8Z Destruct"
DrPc	Tekno	5856	MB_8Z Destruct	4 / 4	4	115	●		:
DrPc	Tekno	5857	MC_8Z Destruct	4 / 4	4	115	●		:
DrPc	Tekno	5858	MD_8Z Destruct	4 / 4	4	115	●		:
DrPc	Tekno	5859	ME_8Z Destruct	4 / 4	2	115	●		:
DrPc	Tekno	5860	MA_8Z Jarrin	4 / 4	2	105	●		"8Z Jarrin"
DrPc	Tekno	5861	MB_8Z Jarrin	4 / 4	4	105	●		:
DrPc	Tekno	5862	MC_8Z Jarrin	4 / 4	4	105	●		:
DrPc	Tekno	5863	MD_8Z Jarrin	4 / 4	4	105	●		:
DrPc	Tekno	5864	ME_8Z Jarrin	4 / 4	1	105	●		:
DrPc	Tekno	5865	MA_8Z Romps	4 / 4	4	125	●		"8Z Romps"
DrPc	Tekno	5866	MB_8Z Romps	4 / 4	4	125	●		:
DrPc	Tekno	5867	MC_8Z Romps	4 / 4	4	125	●		:
DrPc	Tekno	5868	MD_8Z Romps	4 / 4	4	125	●		:
DrPc	Tekno	5869	ME_8Z Romps	4 / 4	2	125	●		:
DrPc	Tekno	5870	MA_Dub Element	4 / 4	2	120	●		"8Z Dub Element"
DrPc	Tekno	5871	MB_Dub Element	4 / 4	2	120	●		:
DrPc	Tekno	5872	MC_Dub Element	4 / 4	2	120	●		:
DrPc	Tekno	5873	FA_Dub Element	4 / 4	1	120	●		:
DrPc	Tekno	5874	FB_Dub Element	4 / 4	2	120	●		:
DrPc	Tekno	5875	FC_Dub Element	4 / 4	1	120	●		:
DrPc	Tekno	5876	BA_Dub Element	4 / 4	1	120	●		:
DrPc	Tekno	5877	MA_Electronica1	4 / 4	1	118	●		"Tekno Kit"
DrPc	Tekno	5878	MA_Electronica2	4 / 4	1	118	●		"Analog T9 Kit"
DrPc	Tekno	5879	MA_8Z Heartbrek	4 / 4	4	90	●		"8Z Heavy Hearts"
DrPc	Tekno	5880	MA_Sp SFX	4 / 4	4	100	●		"Special SFXs"
DrPc	Tekno	5881	MB_Sp SFX	4 / 4	4	100	●		:
DrPc	Tekno	5882	MC_Sp SFX	4 / 4	2	100	●		:
DrPc	Tekno	5883	FA_Sp SFX	4 / 4	1	100	●		:
DrPc	Tekno	5884	FB_Sp SFX	4 / 4	2	100	●		:
DrPc	Tekno	5885	FC_Sp SFX	4 / 4	2	100	●		:
DrPc	Tekno	5886	BA_Sp SFX	4 / 4	1	100	●		:
DrPc	Tekno	5887	MA_Techno 1	4 / 4	4	135	●		"House Kit 2"

Main Category	Sub Category	ARP No.	ARP Name	Time Signature	Length	Original Tempo	Accent	Random SFX	Voice Type
DrPc	Tekno	5888	MB_Techno 1	4 / 4	8	135	●		"House Kit 2"
DrPc	Tekno	5889	MC_Techno 1	4 / 4	8	135	●		:
DrPc	Tekno	5890	FA_Techno 1	4 / 4	1	135	●		:
DrPc	Tekno	5891	FB_Techno 1	4 / 4	1	135	●		:
DrPc	Tekno	5892	FC_Techno 1	4 / 4	1	135	●		:
DrPc	Tekno	5893	BA_Techno 1	4 / 4	4	135	●		:
DrPc	Tekno	5894	MA_Techno 2	4 / 4	4	137	●		"Trance Kit"
DrPc	Tekno	5895	MB_Techno 2	4 / 4	4	137	●		:
DrPc	Tekno	5896	FA_Techno 2	4 / 4	1	137	●		:
DrPc	Tekno	5897	FB_Techno 2	4 / 4	2	137	●		:
DrPc	Tekno	5898	FC_Techno 2	4 / 4	2	137	●		:
DrPc	Tekno	5899	MA1_8Z Trance 1	4 / 4	8	142	●		"8Z Psychedelic 1"
DrPc	Tekno	5900	MB1_8Z Trance 1	4 / 4	4	142	●		:
DrPc	Tekno	5901	MC1_8Z Trance 1	4 / 4	16	142	●		:
DrPc	Tekno	5902	FA1_8Z Trance 1	4 / 4	2	142	●		:
DrPc	Tekno	5903	FB1_8Z Trance 1	4 / 4	8	142	●		:
DrPc	Tekno	5904	FC1_8Z Trance 1	4 / 4	8	142	●		:
DrPc	Tekno	5905	BA1_8Z Trance 1	4 / 4	1	142	●		:
DrPc	Tekno	5906	MA2_Trance 1	4 / 4	8	142	●		"Psychedelic Kit"
DrPc	Tekno	5907	MB2_Trance 1	4 / 4	4	142	●		:
DrPc	Tekno	5908	MC2_Trance 1	4 / 4	16	142	●		:
DrPc	Tekno	5909	FA2_Trance 1	4 / 4	2	142	●		:
DrPc	Tekno	5910	FB2_Trance 1	4 / 4	8	142	●		:
DrPc	Tekno	5911	FC2_Trance 1	4 / 4	8	142	●		:
DrPc	Tekno	5912	BA2_Trance 1	4 / 4	1	142	●		:
DrPc	Tekno	5913	MA_Trance 2	4 / 4	8	135	●		"Trance Kit"
DrPc	Tekno	5914	MB_Trance 2	4 / 4	8	135	●		:
DrPc	Tekno	5915	MC_Trance 2	4 / 4	8	135	●		:
DrPc	Tekno	5916	FA_Trance 2	4 / 4	1	135	●		:
DrPc	Tekno	5917	FB_Trance 2	4 / 4	8	135	●		:
DrPc	Tekno	5918	FC_Trance 2	4 / 4	1	135	●		:
DrPc	Tekno	5919	BA_Trance 2	4 / 4	1	135	●		:
DrPc	Tekno	5920	MA_8Z Trance 3	4 / 4	2	140	●		"8Z Psychedelic 1"
DrPc	Tekno	5921	MB_8Z Trance 3	4 / 4	2	140	●		:
DrPc	Tekno	5922	MC_8Z Trance 3	4 / 4	3	140	●		:
DrPc	Tekno	5923	FA_8Z Trance 3	4 / 4	2	140	●		:
DrPc	Tekno	5924	FB_8Z Trance 3	4 / 4	2	140	●		:
DrPc	Tekno	5925	FC_8Z Trance 3	4 / 4	4	140	●		:
DrPc	Tekno	5926	BA_8Z Trance 3	4 / 4	1	140	●		:
DrPc	Tekno	5927	MA_Trance 4	4 / 4	4	130	●		"Analog T8 Kit"
DrPc	Tekno	5928	MB_Trance 4	4 / 4	2	130	●		:
DrPc	Tekno	5929	MC_Trance 4	4 / 4	4	130	●		:
DrPc	Tekno	5930	FA_Trance 4	4 / 4	4	130	●		:
DrPc	Tekno	5931	FC_Trance 4	4 / 4	4	130	●		:
DrPc	Tekno	5932	BA_Trance 4	4 / 4	2	130	●		:
DrPc	Tekno	5933	MA_Trance 5	4 / 4	4	140	●		"Analog T9 Kit"
DrPc	Tekno	5934	MB_Trance 5	4 / 4	4	140	●		:
DrPc	Tekno	5935	MC_Trance 5	4 / 4	4	140	●		:
DrPc	Tekno	5936	MD_Trance 5	4 / 4	4	140	●		:
DrPc	Tekno	5937	IA_Trance 5	4 / 4	4	140	●		:
DrPc	Tekno	5938	FA_Trance 5	4 / 4	4	140	●		:
DrPc	Tekno	5939	FB_Trance 5	4 / 4	4	140	●		:
DrPc	Tekno	5940	FC_Trance 5	4 / 4	4	140	●		:
DrPc	Tekno	5941	ME_Trance 5/Bd1	4 / 4	4	140	●		:
DrPc	Tekno	5942	ME_Trance 5/Bd2	4 / 4	4	140	●		:
DrPc	Tekno	5943	ME_Trance 5/Bd3	4 / 4	4	140	●		:
DrPc	Tekno	5944	ME_Trance 5/Bd4	4 / 4	4	140	●		:
DrPc	Tekno	5945	ME_Trance 5/Hh1	4 / 4	4	140	●		:
DrPc	Tekno	5946	ME_Trance 5/Hh2	4 / 4	2	140	●		:
DrPc	Tekno	5947	ME_Trance 5/Hh3	4 / 4	1	140	●		:
DrPc	Tekno	5948	ME_Trance 5/Hh4	4 / 4	1	140	●		:
DrPc	Tekno	5949	ME_Trance 5/Hh5	4 / 4	1	140	●		:
DrPc	Tekno	5950	ME_Trance 5/Hh6	4 / 4	1	140	●		:
DrPc	Tekno	5951	ME_Trance 5/Hh7	4 / 4	1	140	●		:
DrPc	Tekno	5952	ME_Trance 5/Clp	4 / 4	4	140	●		:
DrPc	Tekno	5953	FD_Trance 5/Sdf	4 / 4	4	140	●		:
DrPc	Tekno	5954	MA1_PsycheTrance	4 / 4	4	143	●		"Psychedelic Kit"
DrPc	Tekno	5955	MB1_PsycheTrance	4 / 4	2	143	●		:
DrPc	Tekno	5956	MC1_PsycheTrance	4 / 4	2	143	●		:
DrPc	Tekno	5957	MD1_PsycheTrance	4 / 4	4	143	●		:
DrPc	Tekno	5958	ME1_PsycheTrance	4 / 4	4	143	●		:
DrPc	Tekno	5959	MF1_PsycheTrance	4 / 4	4	143	●		:
DrPc	Tekno	5960	FA1_PsycheTrance	4 / 4	1	143	●		:
DrPc	Tekno	5961	FB1_PsycheTrance	4 / 4	1	143	●		:
DrPc	Tekno	5962	FC1_PsycheTrance	4 / 4	1	143	●		:
DrPc	Tekno	5963	BA1_PsycheTrance	4 / 4	4	143	●		:
DrPc	Tekno	5964	MA2_8Z Psyche	4 / 4	2	140	●		"8Z Psychedelic 1"
DrPc	Tekno	5965	MB2_8Z Psyche	4 / 4	2	140	●		:
DrPc	Tekno	5966	MC2_8Z Psyche	4 / 4	2	140	●		:
DrPc	Tekno	5967	FA2_8Z Psyche	4 / 4	1	140	●		:
DrPc	Tekno	5968	FB2_8Z Psyche	4 / 4	1	140	●		:
DrPc	Tekno	5969	FC2_8Z Psyche	4 / 4	1	140	●		:
DrPc	Tekno	5970	BA2_8Z Psyche	4 / 4	2	140	●		:

Main Category	Sub Category	ARP No.	ARP Name	Time Signature	Length	Original Tempo	Accent	Random SFX	Voice Type
DrPc	Tekno	5971	MA3_8Z Psyche	4 / 4	1	135	●		8Z Psychedelic 2
DrPc	Tekno	5972	MB3_8Z Psyche	4 / 4	1	135	●		:
DrPc	Tekno	5973	MC3_8Z Psyche	4 / 4	2	135	●		:
DrPc	Tekno	5974	FA3_8Z Psyche	4 / 4	2	135	●		:
DrPc	Tekno	5975	FB3_8Z Psyche	4 / 4	1	135	●		:
DrPc	Tekno	5976	FC3_8Z Psyche	4 / 4	1	135	●		:
DrPc	Tekno	5977	BA3_8Z Psyche	4 / 4	1	135	●		:
DrPc	Tekno	5978	MA_Trance Kit 1	4 / 4	4	136	●		"Trance Kit"
DrPc	Tekno	5979	MA_Trance Kit 2	4 / 4	4	136	●		:
DrPc	Tekno	5980	MA_Trance Kit 3	4 / 4	4	136	●		:
DrPc	Tekno	5981	MA_Trance Kit 4	4 / 4	4	136	●		:
DrPc	Tekno	5982	MA_Trance Kit 5	4 / 4	4	136	●		:
DrPc	Tekno	5983	MA_Trance Kit 6	4 / 4	4	136	●		:
DrPc	Tekno	5984	MA_Trance Kit 7	4 / 4	1	136	●		:
DrPc	Tekno	5985	MA_Trance Kit 8	4 / 4	2	136	●		:
DrPc	Tekno	5986	MA_Trance Kit 9	4 / 4	2	136	●		:
DrPc	Tekno	5987	MA_Trance Kit10	4 / 4	2	136	●		:
DrPc	Tekno	5988	MA_Trance Kit11	4 / 4	2	136	●		:
DrPc	Tekno	5989	MA_Trance Kit12	4 / 4	4	136	●		:
DrPc	Tekno	5990	MA_8Z TrancBsc1	4 / 4	1	136	●		"8Z Trance Basics"
DrPc	Tekno	5991	MA_8Z TrancBsc2	4 / 4	1	136	●		:
DrPc	Tekno	5992	MA_8Z TrancBsc3	4 / 4	1	136	●		:
DrPc	Tekno	5993	MA_8Z TrancBsc4	4 / 4	1	136	●		:
DrPc	Tekno	5994	MA_8Z TrancBsc5	4 / 4	4	136	●		:
DrPc	Tekno	5995	MA_Trance Club1	4 / 4	1	128	●		"Trance Kit"
DrPc	Tekno	5996	MA_Trance Club2	4 / 4	1	128	●		:
DrPc	Tekno	5997	MA_Trance Club3	4 / 4	1	128	●		:
DrPc	Tekno	5998	MA_Trance Club4	4 / 4	1	128	●		:
DrPc	Tekno	5999	MA_Trance Club5	4 / 4	1	128	●		:
DrPc	Tekno	6000	MA_Trance Club6	4 / 4	1	128	●		:
DrPc	Tekno	6001	MA_Trance Vision	4 / 4	4	134	●		"8Z Trance Basics 2"
DrPc	Tekno	6002	MB_Trance Vision	4 / 4	4	134	●		:
DrPc	Tekno	6003	MC_Trance Vision	4 / 4	8	134	●		:
DrPc	Tekno	6004	MD_Trance Vision	4 / 4	4	134	●		:
DrPc	Tekno	6005	ME_Trance Vision	4 / 4	4	134	●		:
DrPc	Tekno	6006	MF_Trance Vision	4 / 4	4	134	●		:
DrPc	Tekno	6007	MG_Trance Vision	4 / 4	4	134	●		:
DrPc	Tekno	6008	MH_Trance Vision	4 / 4	4	134	●		:
DrPc	Tekno	6009	MA_Dream Trance	4 / 4	4	140	●		:
DrPc	Tekno	6010	MB_Dream Trance	4 / 4	4	140	●		:
DrPc	Tekno	6011	MC_Dream Trance	4 / 4	4	140	●		:
DrPc	Tekno	6012	MD_Dream Trance	4 / 4	4	140	●		:
DrPc	Tekno	6013	MA_MagneticTrance	4 / 4	4	130	●		"8Z Jarrin"
DrPc	Tekno	6014	MB_MagneticTrance	4 / 4	4	130	●		:
DrPc	Tekno	6015	MC_MagneticTrance	4 / 4	4	130	●		:
DrPc	Tekno	6016	MD_MagneticTrance	4 / 4	4	130	●		:
DrPc	Tekno	6017	MA_Electrix	4 / 4	2	119	●		"Wacko Kit"
DrPc	Tekno	6018	MB_Electrix	4 / 4	2	119	●		:
DrPc	Tekno	6019	MC_Electrix	4 / 4	2	119	●		:
DrPc	Tekno	6020	MD_Electrix	4 / 4	2	119	●		:
DrPc	Tekno	6021	ME_Electrix	4 / 4	2	119	●		:
DrPc	Tekno	6022	FA_Electrix	4 / 4	1	119	●		:
DrPc	Tekno	6023	MA_Cool Breakz	4 / 4	2	116	●		"8Z Tom Heartz"
DrPc	Tekno	6024	MB_Cool Breakz	4 / 4	2	116	●		:
DrPc	Tekno	6025	MC_Cool Breakz	4 / 4	2	116	●		:
DrPc	Tekno	6026	FA_Cool Breakz	4 / 4	2	116	●		:
DrPc	Tekno	6027	FB_Cool Breakz	4 / 4	2	116	●		:
DrPc	Tekno	6028	FC_Cool Breakz	4 / 4	2	116	●		:
DrPc	Tekno	6029	MA_8Z ErlyLoFi1	4 / 4	1	136	●		"8Z Early Lo-Fi"
DrPc	Tekno	6030	MA_8Z ErlyLoFi2	4 / 4	1	136	●		:
DrPc	Tekno	6031	MA_8Z ErlyLoFi3	4 / 4	1	136	●		:
DrPc	Tekno	6032	MA_8Z ErlyLoFi4	4 / 4	1	136	●		:
DrPc	Tekno	6033	MA_8Z ErlyLoFi5	4 / 4	1	136	●		:
DrPc	Tekno	6034	MA_8Z NoizeXpr1	4 / 4	4	136	●		"8Z Noize Xpress"
DrPc	Tekno	6035	MA_8Z NoizeXpr2	4 / 4	4	136	●		:
DrPc	Tekno	6036	MA_8Z NoizeXpr3	4 / 4	4	136	●		:
DrPc	Tekno	6037	MA_8Z NoizeXpr4	4 / 4	4	136	●		:
DrPc	Tekno	6038	MA_8Z NoizeXpr5	4 / 4	4	136	●		:
DrPc	Tekno	6039	MA_8Z ReversBt1	4 / 4	1	136	●		"8Z Reverse Beatz"
DrPc	Tekno	6040	MA_8Z ReversBt2	4 / 4	1	136	●		:
DrPc	Tekno	6041	MA_8Z ReversBt3	4 / 4	1	136	●		:
DrPc	Tekno	6042	MA_8Z ReversBt4	4 / 4	1	136	●		:
DrPc	Tekno	6043	MA_8Z CrushDnc1	4 / 4	2	136	●		"8Z Crush Dance"
DrPc	Tekno	6044	MA_8Z CrushDnc2	4 / 4	2	136	●		:
DrPc	Tekno	6045	MA_8Z CrushDnc3	4 / 4	4	136	●		:
DrPc	Tekno	6046	MA_8Z CrushDnc4	4 / 4	2	136	●		:
DrPc	Tekno	6047	MA_8Z CrushDnc5	4 / 4	4	136	●		:
DrPc	House	6048	MA_Dream Dance	4 / 4	4	136	●		"House Kit 1"
DrPc	House	6049	MC_Dream Dance	4 / 4	4	136	●		:
DrPc	House	6050	MD_Dream Dance	4 / 4	4	136	●		:
DrPc	House	6051	IA_Dream Dance	4 / 4	4	136	●		:
DrPc	House	6052	ME_Dream Dance/Bd1	4 / 4	4	136	●		:
DrPc	House	6053	ME_Dream Dance/Bd2	4 / 4	1	136	●		:

Main Category	Sub Category	ARP No.	ARP Name	Time Signature	Length	Original Tempo	Accent	Random SFX	Voice Type
DrPc	House	6054	ME_Dream Dance/Bd3	4 / 4	4	136	●		"House Kit 1"
DrPc	House	6055	ME_Dream Dance/Bd4	4 / 4	4	136	●		:
DrPc	House	6056	ME_Dream Dance/Bd5	4 / 4	4	136	●		:
DrPc	House	6057	ME_Dream Dance/Hh1	4 / 4	1	136	●		:
DrPc	House	6058	ME_Dream Dance/Hh2	4 / 4	4	136	●		:
DrPc	House	6059	ME_Dream Dance/Hh3	4 / 4	2	136	●		:
DrPc	House	6060	ME_Dream Dance/Hh4	4 / 4	4	136	●		"Analog T8 Kit"
DrPc	House	6061	ME_Dream Dance/Clp	4 / 4	4	136	●		"House Kit 1"
DrPc	House	6062	ME_Dream Dance/Pc1	4 / 4	4	136	●		"Percussion Kit"
DrPc	House	6063	ME_Dream Dance/Pc2	4 / 4	2	136	●		"Analog T8 Kit"
DrPc	House	6064	ME_Dream Dance/Pc3	4 / 4	4	136	●		:
DrPc	House	6065	FA_Dream Dance/Sdf	4 / 4	4	136	●		"House Kit 1"
DrPc	House	6066	MA1_Ibiza	4 / 4	2	135	●		:
DrPc	House	6067	MB1_Ibiza	4 / 4	2	135	●		:
DrPc	House	6068	MC1_Ibiza	4 / 4	2	135	●		:
DrPc	House	6069	MD1_Ibiza	4 / 4	2	135	●		:
DrPc	House	6070	IA1_Ibiza	4 / 4	8	135	●		:
DrPc	House	6071	FA1_Ibiza	4 / 4	1	135	●		:
DrPc	House	6072	FB1_Ibiza	4 / 4	1	135	●		:
DrPc	House	6073	FC1_Ibiza	4 / 4	2	135	●		:
DrPc	House	6074	MA2_Ibiza	4 / 4	2	135	●		"Dry Standard Kit"
DrPc	House	6075	FB2_Ibiza	4 / 4	1	135	●		"Dry Standard Kit (PB Range=24)"
DrPc	House	6076	MA_Retro Pop	4 / 4	1	126	●		"House Kit 1"
DrPc	House	6077	MC_Retro Pop	4 / 4	2	126	●		:
DrPc	House	6078	FC_Retro Pop	4 / 4	1	126	●		:
DrPc	House	6079	MA_Euro Teck	4 / 4	2	140	●		"Tekno Kit"
DrPc	House	6080	MB_Euro Teck	4 / 4	2	140	●		:
DrPc	House	6081	MC_Euro Teck	4 / 4	2	140	●		:
DrPc	House	6082	MD_Euro Teck	4 / 4	2	140	●		:
DrPc	House	6083	ME_Euro Teck	4 / 4	2	140	●		:
DrPc	House	6084	MA_Disco House	4 / 4	4	126	●		"Acid Kit"
DrPc	House	6085	MB_Disco House	4 / 4	4	126	●		:
DrPc	House	6086	MC_Disco House	4 / 4	4	126	●		:
DrPc	House	6087	FA_Disco House	4 / 4	1	126	●		:
DrPc	House	6088	FB_Disco House	4 / 4	1	126	●		:
DrPc	House	6089	FC_Disco House	4 / 4	1	126	●		:
DrPc	House	6090	BA_Disco House	4 / 4	1	126	●		:
DrPc	House	6091	MA1_Club House	4 / 4	1	128	●		"House Kit 1"
DrPc	House	6092	MB1_Club House	4 / 4	1	128	●		:
DrPc	House	6093	MC1_Club House	4 / 4	1	128	●		:
DrPc	House	6094	MD1_Club House	4 / 4	1	128	●		:
DrPc	House	6095	IA1_Club House	4 / 4	2	128	●		:
DrPc	House	6096	FA1_Club House	4 / 4	1	128	●		:
DrPc	House	6097	FB1_Club House	4 / 4	1	128	●		:
DrPc	House	6098	FC1_Club House	4 / 4	2	128	●		:
DrPc	House	6099	MD2_Club House	4 / 4	1	128	●		"Hyper Standard Kit"
DrPc	House	6100	IA2_Club House	4 / 4	1	128	●		"House Kit 1"
DrPc	House	6101	FB2_Club House	4 / 4	1	128	●		"Hyper Standard Kit"
DrPc	House	6102	MA_House 1	4 / 4	2	123	●		"Analog T9 Kit"
DrPc	House	6103	MA_House 2	4 / 4	1	123	●		"Garage Kit"
DrPc	House	6104	MA_House 3	4 / 4	2	127	●		:
DrPc	House	6105	MA_House 4	4 / 4	2	130	●		"Hip Hop Kit 3"
DrPc	House	6106	MB_House 4	4 / 4	2	130	●		:
DrPc	House	6107	MC_House 4	4 / 4	2	130	●		:
DrPc	House	6108	MA_House 5	4 / 4	4	120	●		"House Kit 1"
DrPc	House	6109	MB_House 5	4 / 4	1	120	●		:
DrPc	House	6110	MC_House 5	4 / 4	1	120	●		:
DrPc	House	6111	MD_House 5	4 / 4	1	120	●		:
DrPc	House	6112	MA_House 6	4 / 4	1	120	●		:
DrPc	House	6113	MB_House 6	4 / 4	1	120	●		:
DrPc	House	6114	MC_House 6	4 / 4	1	120	●		:
DrPc	House	6115	MA_House 7	4 / 4	1	120	●		:
DrPc	House	6116	MB_House 7	4 / 4	1	120	●		:
DrPc	House	6117	MA_House 8	4 / 4	2	120	●		:
DrPc	House	6118	MA_House 9	4 / 4	4	120	●		:
DrPc	House	6119	MA_House 10	4 / 4	1	120	●		:
DrPc	House	6120	MB_House 10	4 / 4	1	120	●		:
DrPc	House	6121	MA_House 11	4 / 4	1	120	●		:
DrPc	House	6122	MB_House 11	4 / 4	1	120	●		:
DrPc	House	6123	MC_House 11	4 / 4	1	120	●		:
DrPc	House	6124	MA_House 12	4 / 4	2	120	●		:
DrPc	House	6125	MA_House 13	4 / 4	2	120	●		:
DrPc	House	6126	MA_House 14	4 / 4	1	123	●		:
DrPc	House	6127	MA_House 15	4 / 4	2	128	●		:
DrPc	House	6128	MA_Garage 1	4 / 4	2	130	●		"Garage Kit"
DrPc	House	6129	MA_Garage 2	4 / 4	2	127	●		"House Kit 1"
DrPc	House	6130	MB_Garage 2	4 / 4	2	127	●		:
DrPc	House	6131	MC_Garage 2	4 / 4	2	127	●		:
DrPc	House	6132	MD_Garage 2	4 / 4	2	127	●		:
DrPc	House	6133	IA_Garage 2/a	4 / 4	1	127	●		:
DrPc	House	6134	IA_Garage 2/b	4 / 4	1	127	●		:
DrPc	House	6135	FA_Garage 2	4 / 4	1	127	●		:
DrPc	House	6136	FC_Garage 2	4 / 4	2	127	●		:

Main Category	Sub Category	ARP No.	ARP Name	Time Signature	Length	Original Tempo	Accent	Random SFX	Voice Type
DrPc	House	6137	MA_UK Garage 1	4 / 4	1	135	●		"Garage Kit"
DrPc	House	6138	MA_UK Garage 2	4 / 4	1	135	●		:
DrPc	House	6139	MA_UK Garage 3	4 / 4	1	138	●		:
DrPc	House	6140	MA_UK Garage 4	4 / 4	2	138	●		:
DrPc	House	6141	MA_UK Garage 5	4 / 4	1	138	●		:
DrPc	House	6142	MA_UK Garage 6	4 / 4	4	130	●		"House Kit 1"
DrPc	House	6143	MB_UK Garage 6	4 / 4	4	130	●		:
DrPc	House	6144	MC_UK Garage 6	4 / 4	4	130	●		:
DrPc	House	6145	MA_2 Step	4 / 4	2	120	●		:
DrPc	D&B	6146	MA_Big Beat 1	4 / 4	4	115	●		"Break Kit"
DrPc	D&B	6147	MB_Big Beat 1	4 / 4	4	115	●		:
DrPc	D&B	6148	MC_Big Beat 1	4 / 4	4	115	●		:
DrPc	D&B	6149	FA_Big Beat 1	4 / 4	1	115	●		:
DrPc	D&B	6150	FB_Big Beat 1	4 / 4	1	115	●		:
DrPc	D&B	6151	FC_Big Beat 1	4 / 4	1	115	●		:
DrPc	D&B	6152	BA_Big Beat 1	4 / 4	1	115	●		:
DrPc	D&B	6153	MA1_Big Beat 2	4 / 4	4	145	●		:
DrPc	D&B	6154	MB1_Big Beat 2	4 / 4	8	145	●		:
DrPc	D&B	6155	MC1_Big Beat 2	4 / 4	4	145	●		:
DrPc	D&B	6156	FA1_Big Beat 2	4 / 4	1	145	●		:
DrPc	D&B	6157	FB1_Big Beat 2	4 / 4	1	145	●		:
DrPc	D&B	6158	FC1_Big Beat 2	4 / 4	1	145	●		:
DrPc	D&B	6159	BA1_Big Beat 2	4 / 4	2	145	●		:
DrPc	D&B	6160	MA2_Big Beat 2	4 / 4	4	145	●		"Trance Kit"
DrPc	D&B	6161	MB2_Big Beat 2	4 / 4	8	145	●		:
DrPc	D&B	6162	MC2_Big Beat 2	4 / 4	4	145	●		:
DrPc	D&B	6163	FA2_Big Beat 2	4 / 4	1	145	●		:
DrPc	D&B	6164	FB2_Big Beat 2	4 / 4	1	145	●		:
DrPc	D&B	6165	FC2_Big Beat 2	4 / 4	1	145	●		:
DrPc	D&B	6166	BA2_Big Beat 2	4 / 4	2	145	●		:
DrPc	D&B	6167	MA_Big Beat 3	4 / 4	2	120	●		"Big Kit"
DrPc	D&B	6168	MB_Big Beat 3	4 / 4	1	120	●		:
DrPc	D&B	6169	MA_Big Beat 4	4 / 4	1	138	●		:
DrPc	D&B	6170	MA_Big Beat 5	4 / 4	1	128	●		:
DrPc	D&B	6171	MA_Big Beat 6	4 / 4	4	120	●		"Rock Stereo Kit 2"
DrPc	D&B	6172	MA_Big Beat 7	4 / 4	4	136	●		"Big Kit"
DrPc	D&B	6173	MA_Big Beat 8	4 / 4	1	135	●		:
DrPc	D&B	6174	MA_Big Beat 9	4 / 4	1	132	●		:
DrPc	D&B	6175	MA_Big Beat 10	4 / 4	2	124	●		:
DrPc	D&B	6176	MA_Big Beat 11	4 / 4	1	120	●		:
DrPc	D&B	6177	MA_Break Trance	4 / 4	1	130	●		"Tekno Kit"
DrPc	D&B	6178	MA1_Breakbeats 1	4 / 4	4	115	●		"Break Kit"
DrPc	D&B	6179	MB1_Breakbeats 1	4 / 4	4	115	●		:
DrPc	D&B	6180	MC1_Breakbeats 1	4 / 4	2	115	●		:
DrPc	D&B	6181	FA1_Breakbeats 1	4 / 4	1	115	●		:
DrPc	D&B	6182	FB1_Breakbeats 1	4 / 4	1	115	●		:
DrPc	D&B	6183	FC1_Breakbeats 1	4 / 4	1	115	●		:
DrPc	D&B	6184	BA1_Breakbeats 1	4 / 4	1	115	●		:
DrPc	D&B	6185	MA2_8Z Breakbt1	4 / 4	4	115	●		"8Z Jarrin"
DrPc	D&B	6186	MB2_8Z Breakbt1	4 / 4	4	115	●		:
DrPc	D&B	6187	MC2_8Z Breakbt1	4 / 4	2	115	●		:
DrPc	D&B	6188	FA2_8Z Breakbt1	4 / 4	1	115	●		:
DrPc	D&B	6189	FB2_8Z Breakbt1	4 / 4	1	115	●		:
DrPc	D&B	6190	FC2_8Z Breakbt1	4 / 4	1	115	●		:
DrPc	D&B	6191	BA2_8Z Breakbt1	4 / 4	1	115	●		:
DrPc	D&B	6192	MA1_Breakbeats 2	4 / 4	4	88	●		"Drum'n'Bass Kit"
DrPc	D&B	6193	MB1_Breakbeats 2	4 / 4	4	88	●		:
DrPc	D&B	6194	MC1_Breakbeats 2	4 / 4	4	88	●		:
DrPc	D&B	6195	FA1_Breakbeats 2	4 / 4	1	88	●		:
DrPc	D&B	6196	FB1_Breakbeats 2	4 / 4	1	88	●		:
DrPc	D&B	6197	FC1_Breakbeats 2	4 / 4	1	88	●		:
DrPc	D&B	6198	BA1_Breakbeats 2	4 / 4	1	88	●		:
DrPc	D&B	6199	MA2_Breakbeats 2	4 / 4	4	88	●		"Big Kit"
DrPc	D&B	6200	MB2_Breakbeats 2	4 / 4	4	88	●		:
DrPc	D&B	6201	MC2_Breakbeats 2	4 / 4	4	88	●		:
DrPc	D&B	6202	FA2_Breakbeats 2	4 / 4	1	88	●		:
DrPc	D&B	6203	FB2_Breakbeats 2	4 / 4	1	88	●		:
DrPc	D&B	6204	FC2_Breakbeats 2	4 / 4	1	88	●		:
DrPc	D&B	6205	BA2_Breakbeats 2	4 / 4	1	88	●		:
DrPc	D&B	6206	MA_Lo Beat 1	4 / 4	2	140	●		"Break Kit"
DrPc	D&B	6207	MA_Lo Beat 2	4 / 4	2	130	●		:
DrPc	D&B	6208	MA_Lo Beat 3	4 / 4	1	122	●		:
DrPc	D&B	6209	MA_Lo Beat 4	4 / 4	1	115	●		:
DrPc	D&B	6210	MA_Lo Beat 5	4 / 4	4	180	●		:
DrPc	D&B	6211	MA_Lo Beat 6	4 / 4	1	87	●		:
DrPc	D&B	6212	MA_Abstract	4 / 4	2	86	●		"Hip Hop Kit 2"
DrPc	D&B	6213	MA_Drum'n'Bass1	4 / 4	1	170	●		"Jungle Kit"
DrPc	D&B	6214	MA_Drum'n'Bass2	4 / 4	2	165	●		:
DrPc	D&B	6215	MA_Drum'n'Bass3	4 / 4	2	154	●		"Drum'n'Bass Kit"
DrPc	D&B	6216	MB_Drum'n'Bass3	4 / 4	2	154	●		:
DrPc	D&B	6217	MC_Drum'n'Bass3	4 / 4	2	154	●		:
DrPc	D&B	6218	MD_Drum'n'Bass3	4 / 4	1	154	●		:
DrPc	D&B	6219	ME_Drum'n'Bass3	4 / 4	2	154	●		:

Main Category	Sub Category	ARP No.	ARP Name	Time Signature	Length	Original Tempo	Accent	Random SFX	Voice Type
DrPc	D&B	6220	MA_Drum'n'Bass4	4 / 4	1	170	●		"Drum'n'Bass Kit"
DrPc	Chill	6221	MA_Ambient 1	4 / 4	4	102	●		"Break Kit"
DrPc	Chill	6222	MB_Ambient 1	4 / 4	4	102	●		:
DrPc	Chill	6223	MC_Ambient 1	4 / 4	4	102	●		:
DrPc	Chill	6224	FA_Ambient 1	4 / 4	1	102	●		:
DrPc	Chill	6225	FB_Ambient 1	4 / 4	1	102	●		:
DrPc	Chill	6226	FC_Ambient 1	4 / 4	1	102	●		:
DrPc	Chill	6227	BA_Ambient 1	4 / 4	1	102	●		:
DrPc	Chill	6228	MA_Ambient 2	4 / 4	4	111	●		"Belly Dance Kit"
DrPc	Chill	6229	MB_Ambient 2	4 / 4	2	111	●		:
DrPc	Chill	6230	MC_Ambient 2	4 / 4	4	111	●		:
DrPc	Chill	6231	FA_Ambient 2	4 / 4	1	111	●		:
DrPc	Chill	6232	FB_Ambient 2	4 / 4	8	111	●		:
DrPc	Chill	6233	FC_Ambient 2	4 / 4	1	111	●		:
DrPc	Chill	6234	BA_Ambient 2	4 / 4	2	111	●		:
DrPc	Chill	6235	MA1_Ambient 3	4 / 4	4	88	●		"Hard Kit"
DrPc	Chill	6236	MB1_Ambient 3	4 / 4	4	88	●		:
DrPc	Chill	6237	MC1_Ambient 3	4 / 4	4	88	●		:
DrPc	Chill	6238	FA1_Ambient 3	4 / 4	1	88	●		:
DrPc	Chill	6239	FB1_Ambient 3	4 / 4	1	88	●		:
DrPc	Chill	6240	FC1_Ambient 3	4 / 4	1	88	●		:
DrPc	Chill	6241	BA1_Ambient 3	4 / 4	1	88	●		:
DrPc	Chill	6242	MA2_Ambient 3	4 / 4	4	88	●		"SFX Kit"
DrPc	Chill	6243	MB2_Ambient 3	4 / 4	4	88	●		:
DrPc	Chill	6244	MC2_Ambient 3	4 / 4	4	88	●		:
DrPc	Chill	6245	FA2_Ambient 3	4 / 4	1	88	●		:
DrPc	Chill	6246	FB2_Ambient 3	4 / 4	1	88	●		:
DrPc	Chill	6247	FC2_Ambient 3	4 / 4	1	88	●		:
DrPc	Chill	6248	BA2_Ambient 3	4 / 4	1	88	●		:
DrPc	Chill	6249	MA3_Ambient 3	4 / 4	4	88	●		"Pop Latin Kit"
DrPc	Chill	6250	MB3_Ambient 3	4 / 4	4	88	●		:
DrPc	Chill	6251	MC3_Ambient 3	4 / 4	4	88	●		:
DrPc	Chill	6252	FA3_Ambient 3	4 / 4	1	88	●		:
DrPc	Chill	6253	FB3_Ambient 3	4 / 4	1	88	●		:
DrPc	Chill	6254	FC3_Ambient 3	4 / 4	1	88	●		:
DrPc	Chill	6255	BA3_Ambient 3	4 / 4	1	88	●		:
DrPc	Chill	6256	MA1_Chill Out	4 / 4	2	79	●		"Dry Standard Kit"
DrPc	Chill	6257	MB1_Chill Out	4 / 4	2	79	●		:
DrPc	Chill	6258	MC1_Chill Out	4 / 4	4	79	●		:
DrPc	Chill	6259	MD1_Chill Out	4 / 4	2	79	●		:
DrPc	Chill	6260	IA1_Chill Out	4 / 4	1	79	●		:
DrPc	Chill	6261	FA1_Chill Out	4 / 4	1	79	●		:
DrPc	Chill	6262	FB1_Chill Out	4 / 4	1	79	●		:
DrPc	Chill	6263	FC1_Chill Out	4 / 4	4	79	●		:
DrPc	Chill	6264	MA2_Chill Out	4 / 4	2	79	●		"Break Kit"
DrPc	Chill	6265	MB2_Chill Out	4 / 4	2	79	●		:
DrPc	Chill	6266	MC2_Chill Out	4 / 4	4	79	●		:
DrPc	Chill	6267	MD2_Chill Out	4 / 4	2	79	●		:
DrPc	Chill	6268	IA2_Chill Out	4 / 4	4	79	●		:
DrPc	Chill	6269	FA2_Chill Out	4 / 4	1	79	●		:
DrPc	Chill	6270	FB2_Chill Out	4 / 4	1	79	●		:
DrPc	Chill	6271	FC2_Chill Out	4 / 4	4	79	●		:
DrPc	Chill	6272	MA_ChillKit1 /1	4 / 4	4	85	●		"Chill Out Kit"
DrPc	Chill	6273	MA_ChillKit1 /2	4 / 4	4	85	●		:
DrPc	Chill	6274	MA_ChillKit1 /3	4 / 4	4	85	●		:
DrPc	Chill	6275	MA_ChillKit1 /4	4 / 4	4	85	●		:
DrPc	Chill	6276	MA_ChillKit1 /5	4 / 4	4	85	●		:
DrPc	Chill	6277	MA_ChillKit2 /1	4 / 4	4	85	●		:
DrPc	Chill	6278	MA_ChillKit2 /2	4 / 4	4	85	●		:
DrPc	Chill	6279	MA_ChillKit2 /3	4 / 4	4	85	●		:
DrPc	Chill	6280	MA_ChillKit2 /4	4 / 4	4	85	●		:
DrPc	Chill	6281	MA_ChlOutBreak1	4 / 4	4	85	●		:
DrPc	Chill	6282	MA_ChlOutBreak2	4 / 4	4	85	●		:
DrPc	Chill	6283	MA_ChlOutBreak3	4 / 4	4	85	●		:
DrPc	Chill	6284	MA_ChlOutBreak4	4 / 4	4	85	●		:
DrPc	Chill	6285	MA_8Z ChillBrk1	4 / 4	4	85	●		"8Z Chilly Breakz"
DrPc	Chill	6286	MA_8Z ChillBrk2	4 / 4	4	85	●		:
DrPc	Chill	6287	MA_8Z ChillBrk3	4 / 4	4	85	●		:
DrPc	Chill	6288	MA_8Z ChillBrk4	4 / 4	4	85	●		:
DrPc	Chill	6289	MA_8Z ChillBrk5	4 / 4	4	85	●		:
DrPc	Chill	6290	MA_ClassicAmbi1	4 / 4	8	85	●		"Chill Out Kit"
DrPc	Chill	6291	MA_ClassicAmbi2	4 / 4	1	85	●		:
DrPc	Chill	6292	MA_ChillOutSoft	4 / 4	1	85	●		:
DrPc	Chill	6293	MA_ChillOutHard	4 / 4	2	85	●		:
DrPc	Chill	6294	MA_Pop Breaks 1	4 / 4	2	90	●		:
DrPc	Chill	6295	MA_8Z PopBreak2	4 / 4	4	90	●		"8Z Glitch"
DrPc	Chill	6296	MA_8Z PopBreak3	4 / 4	4	90	●		:
DrPc	Chill	6297	MA_8Z GatedBt1	4 / 4	4	85	●		"8Z Gated Beatz"
DrPc	Chill	6298	MA_8Z GatedBt2	4 / 4	4	85	●		:
DrPc	Chill	6299	MA_8Z GatedBt3	4 / 4	4	85	●		:
DrPc	Chill	6300	MA_8Z GatedBt4	4 / 4	4	85	●		:
DrPc	Chill	6301	MA_8Z GatedBt5	4 / 4	4	85	●		:
DrPc	Chill	6302	MA_8Z HeavyHrt1	4 / 4	4	85	●		"8Z Heavy Hearts"

Main Category	Sub Category	ARP No.	ARP Name	Time Signature	Length	Original Tempo	Accent	Random SFX	Voice Type
DrPc	Chill	6303	MA_8Z HeavyHrt2	4 / 4	4	85	●		"8Z Heavy Hearts"
DrPc	Chill	6304	MA_8Z HeavyHrt3	4 / 4	4	85	●		:
DrPc	Chill	6305	MA_8Z HeavyHrt4	4 / 4	4	85	●		:
DrPc	Chill	6306	MA_8Z HeavyHrt5	4 / 4	4	85	●		:
DrPc	Chill	6307	MA1_Synth Pop1	4 / 4	4	90	●		"House Kit 1"
DrPc	Chill	6308	MB1_Synth Pop1	4 / 4	4	90	●		:
DrPc	Chill	6309	MC1_Synth Pop1	4 / 4	4	90	●		:
DrPc	Chill	6310	MD1_Synth Pop1	4 / 4	4	90	●		:
DrPc	Chill	6311	FC1_Synth Pop1	4 / 4	4	90	●		:
DrPc	Chill	6312	MC2_Synth Pop1	4 / 4	2	90	●		:
DrPc	Chill	6313	MD2_Synth Pop1	4 / 4	2	90	●		:
DrPc	Chill	6314	FC2_Synth Pop1	4 / 4	4	90	●		:
DrPc	Chill	6315	ME3_Synth Pop1	4 / 4	2	90	●		"Hip Hop Kit 3"
DrPc	Chill	6316	ME4_Synth Pop1	4 / 4	2	90	●		"House Kit 1"
DrPc	Chill	6317	MA_Synth Pop2	4 / 4	2	90	●		"Synth Pop Kit"
DrPc	Chill	6318	MB_Synth Pop2	4 / 4	2	90	●		:
DrPc	Chill	6319	MC_Synth Pop2	4 / 4	2	90	●		:
DrPc	Chill	6320	MD_Synth Pop2	4 / 4	2	90	●		:
DrPc	Chill	6321	ME_Synth Pop2	4 / 4	2	90	●		:
DrPc	Chill	6322	MA_8Z Static	4 / 4	2	90	●		"8Z Static"
DrPc	Chill	6323	MB_8Z Static	4 / 4	2	90	●		:
DrPc	Chill	6324	MC_8Z Static	4 / 4	2	90	●		:
DrPc	Chill	6325	MD_8Z Static	4 / 4	2	90	●		:
DrPc	Chill	6326	BA_8Z Static	4 / 4	1	90	●		:
DrPc	Chill	6327	BB_8Z Static	4 / 4	1	90	●		:
DrPc	Jazz	6328	MA_AcousticJazz	4 / 4	4	204	●		"Dry Standard Kit"
DrPc	Jazz	6329	MB_AcousticJazz	4 / 4	4	204	●		:
DrPc	Jazz	6330	MC_AcousticJazz	4 / 4	4	204	●		:
DrPc	Jazz	6331	MD_AcousticJazz	4 / 4	4	204	●		:
DrPc	Jazz	6332	IA_AcousticJazz	4 / 4	4	204	●		:
DrPc	Jazz	6333	FA_AcousticJazz	4 / 4	1	204	●		:
DrPc	Jazz	6334	FB_AcousticJazz	4 / 4	1	204	●		:
DrPc	Jazz	6335	FC_AcousticJazz	4 / 4	4	204	●		:
DrPc	Jazz	6336	MA1_Modern Jazz	4 / 4	16	218	●		"Power Standard Kit 1"
DrPc	Jazz	6337	MB1_Modern Jazz	4 / 4	16	218	●		:
DrPc	Jazz	6338	MC1_Modern Jazz	4 / 4	16	218	●		:
DrPc	Jazz	6339	FA1_Modern Jazz	4 / 4	1	218	●		:
DrPc	Jazz	6340	FB1_Modern Jazz	4 / 4	1	218	●		:
DrPc	Jazz	6341	FC1_Modern Jazz	4 / 4	1	218	●		:
DrPc	Jazz	6342	BA1_Modern Jazz	4 / 4	1	218	●		:
DrPc	Jazz	6343	EA1_Modern Jazz	4 / 4	6	218	●		:
DrPc	Jazz	6344	EB1_Modern Jazz	4 / 4	7	218	●		:
DrPc	Jazz	6345	MA2_Modern Jazz	4 / 4	16	218	●		"Pop Latin Kit"
DrPc	Jazz	6346	MB2_Modern Jazz	4 / 4	16	218	●		:
DrPc	Jazz	6347	MC2_Modern Jazz	4 / 4	16	218	●		:
DrPc	Jazz	6348	FA2_Modern Jazz	4 / 4	1	218	●		:
DrPc	Jazz	6349	FB2_Modern Jazz	4 / 4	1	218	●		:
DrPc	Jazz	6350	FC2_Modern Jazz	4 / 4	1	218	●		:
DrPc	Jazz	6351	BA2_Modern Jazz	4 / 4	1	218	●		:
DrPc	Jazz	6352	EA2_Modern Jazz	4 / 4	6	218	●		:
DrPc	Jazz	6353	EB2_Modern Jazz	4 / 4	7	218	●		:
DrPc	Jazz	6354	MA_JazzGtrClub	4 / 4	8	142	●		"Brush Kit"
DrPc	Jazz	6355	MB_JazzGtrClub	4 / 4	8	142	●		:
DrPc	Jazz	6356	MC_JazzGtrClub	4 / 4	8	142	●		:
DrPc	Jazz	6357	FA_JazzGtrClub	4 / 4	1	142	●		:
DrPc	Jazz	6358	FB_JazzGtrClub	4 / 4	1	142	●		:
DrPc	Jazz	6359	FC_JazzGtrClub	4 / 4	1	142	●		:
DrPc	Jazz	6360	BA_JazzGtrClub	4 / 4	1	142	●		:
DrPc	Jazz	6361	EA_JazzGtrClub	4 / 4	6	142	●		:
DrPc	Jazz	6362	MA_Bebop	4 / 4	4	152	●		"Dry Standard Kit"
DrPc	Jazz	6363	MB_Bebop	4 / 4	4	152	●		:
DrPc	Jazz	6364	MA_JazzWaltzMed	3 / 4	8	180	●		"Power Standard Kit 1"
DrPc	Jazz	6365	MB_JazzWaltzMed	3 / 4	8	180	●		:
DrPc	Jazz	6366	MC_JazzWaltzMed	3 / 4	8	180	●		:
DrPc	Jazz	6367	FA_JazzWaltzMed	3 / 4	1	180	●		:
DrPc	Jazz	6368	FB_JazzWaltzMed	3 / 4	1	180	●		:
DrPc	Jazz	6369	FC_JazzWaltzMed	3 / 4	1	180	●		:
DrPc	Jazz	6370	BA_JazzWaltzMed	3 / 4	1	180	●		:
DrPc	Jazz	6371	EA_JazzWaltzMed	3 / 4	7	180	●		:
DrPc	Jazz	6372	MA_R&R Shuffle	4 / 4	4	192	●		:
DrPc	Jazz	6373	MB_R&R Shuffle	4 / 4	4	192	●		:
DrPc	Jazz	6374	MC_R&R Shuffle	4 / 4	4	192	●		:
DrPc	Jazz	6375	FA_R&R Shuffle	4 / 4	1	192	●		:
DrPc	Jazz	6376	FB_R&R Shuffle	4 / 4	1	192	●		:
DrPc	Jazz	6377	FC_R&R Shuffle	4 / 4	1	192	●		:
DrPc	Jazz	6378	BA_R&R Shuffle	4 / 4	1	192	●		:
DrPc	Jazz	6379	EA_R&R Shuffle	4 / 4	5	192	●		:
DrPc	Jazz	6380	EB_R&R Shuffle	4 / 4	5	192	●		:
DrPc	Jazz	6381	MA_ShuffleBlues	4 / 4	4	115	●		"Power Standard Kit 2"
DrPc	Jazz	6382	MB_ShuffleBlues	4 / 4	4	115	●		:
DrPc	Jazz	6383	MC_ShuffleBlues	4 / 4	4	115	●		:
DrPc	Jazz	6384	FA_ShuffleBlues	4 / 4	1	115	●		:
DrPc	Jazz	6385	FB_ShuffleBlues	4 / 4	1	115	●		:

Main Category	Sub Category	ARP No.	ARP Name	Time Signature	Length	Original Tempo	Accent	Random SFX	Voice Type
DrPc	Jazz	6386	FC_ShuffleBlues	4 / 4	1	115	●		"Power Standard Kit 2"
DrPc	Jazz	6387	BA_ShuffleBlues	4 / 4	1	115	●		:
DrPc	Jazz	6388	EA_ShuffleBlues	4 / 4	5	115	●		:
DrPc	Jazz	6389	EB_ShuffleBlues	4 / 4	6	115	●		:
DrPc	Jazz	6390	MA_Slow Blues 1	4 / 4	2	49	●		:
DrPc	Jazz	6391	MB_Slow Blues 1	4 / 4	2	49	●		:
DrPc	Jazz	6392	MC_Slow Blues 1	4 / 4	2	49	●		:
DrPc	Jazz	6393	FA_Slow Blues 1	4 / 4	1	49	●		:
DrPc	Jazz	6394	FB_Slow Blues 1	4 / 4	1	49	●		:
DrPc	Jazz	6395	FC_Slow Blues 1	4 / 4	1	49	●		:
DrPc	Jazz	6396	BA_Slow Blues 1	4 / 4	1	49	●		:
DrPc	Jazz	6397	EA_Slow Blues 1	4 / 4	3	49	●		:
DrPc	Jazz	6398	EB_Slow Blues 1	4 / 4	3	49	●		:
DrPc	Jazz	6399	MA_Slow Blues 2	4 / 4	4	72	●		"Modern Rock Kit"
DrPc	Jazz	6400	MB_Slow Blues 2	4 / 4	4	72	●		:
DrPc	Jazz	6401	MC_Slow Blues 2	4 / 4	4	72	●		:
DrPc	Jazz	6402	FA_Slow Blues 2	4 / 4	1	72	●		:
DrPc	Jazz	6403	FB_Slow Blues 2	4 / 4	1	72	●		:
DrPc	Jazz	6404	FC_Slow Blues 2	4 / 4	1	72	●		:
DrPc	Jazz	6405	BA_Slow Blues 2	4 / 4	1	72	●		:
DrPc	Jazz	6406	MA_Piano Boogie	4 / 4	8	160	●		"Power Standard Kit 2"
DrPc	Jazz	6407	MB_Piano Boogie	4 / 4	4	160	●		:
DrPc	Jazz	6408	MC_Piano Boogie	4 / 4	4	160	●		:
DrPc	Jazz	6409	FA_Piano Boogie	4 / 4	1	160	●		:
DrPc	Jazz	6410	FB_Piano Boogie	4 / 4	1	160	●		:
DrPc	Jazz	6411	FC_Piano Boogie	4 / 4	1	160	●		:
DrPc	Jazz	6412	BA_Piano Boogie	4 / 4	1	160	●		:
DrPc	Jazz	6413	EA_Piano Boogie	4 / 4	5	160	●		:
DrPc	Jazz	6414	EB_Piano Boogie	4 / 4	5	160	●		:
DrPc	Latin	6415	MA1_Salsa 1	4 / 4	4	177	●		"Power Standard Kit 1"
DrPc	Latin	6416	MB1_Salsa 1	4 / 4	4	177	●		:
DrPc	Latin	6417	MC1_Salsa 1	4 / 4	4	177	●		:
DrPc	Latin	6418	FA1_Salsa 1	4 / 4	1	177	●		:
DrPc	Latin	6419	FB1_Salsa 1	4 / 4	1	177	●		:
DrPc	Latin	6420	FC1_Salsa 1	4 / 4	1	177	●		:
DrPc	Latin	6421	BA1_Salsa 1	4 / 4	1	177	●		:
DrPc	Latin	6422	EA1_Salsa 1	4 / 4	5	177	●		:
DrPc	Latin	6423	EB1_Salsa 1	4 / 4	5	177	●		:
DrPc	Latin	6424	MA2_Salsa 1	4 / 4	4	177	●		"Pop Latin Kit"
DrPc	Latin	6425	MB2_Salsa 1	4 / 4	4	177	●		:
DrPc	Latin	6426	MC2_Salsa 1	4 / 4	4	177	●		:
DrPc	Latin	6427	FA2_Salsa 1	4 / 4	1	177	●		:
DrPc	Latin	6428	FB2_Salsa 1	4 / 4	1	177	●		:
DrPc	Latin	6429	FC2_Salsa 1	4 / 4	1	177	●		:
DrPc	Latin	6430	BA2_Salsa 1	4 / 4	1	177	●		:
DrPc	Latin	6431	EA2_Salsa 1	4 / 4	5	177	●		:
DrPc	Latin	6432	EB2_Salsa 1	4 / 4	5	177	●		:
DrPc	Latin	6433	MA1_Salsa 2	4 / 4	2	123	●		"Dry Standard Kit"
DrPc	Latin	6434	MB1_Salsa 2	4 / 4	2	123	●		:
DrPc	Latin	6435	MC1_Salsa 2	4 / 4	2	123	●		:
DrPc	Latin	6436	MD1_Salsa 2	4 / 4	4	123	●		:
DrPc	Latin	6437	IA1_Salsa 2/a	4 / 4	2	123	●		:
DrPc	Latin	6438	IA1_Salsa 2/b	4 / 4	2	123	●		:
DrPc	Latin	6439	FA1_Salsa 2	4 / 4	1	123	●		:
DrPc	Latin	6440	FB1_Salsa 2	4 / 4	1	123	●		:
DrPc	Latin	6441	FC1_Salsa 2	4 / 4	2	123	●		:
DrPc	Latin	6442	MA2_Salsa 2	4 / 4	4	123	●		"Pop Latin Kit"
DrPc	Latin	6443	MB2_Salsa 2	4 / 4	4	123	●		:
DrPc	Latin	6444	MC2_Salsa 2	4 / 4	4	123	●		:
DrPc	Latin	6445	MD2_Salsa 2	4 / 4	4	123	●		:
DrPc	Latin	6446	IA2_Salsa 2	4 / 4	4	123	●		:
DrPc	Latin	6447	FA2_Salsa 2	4 / 4	1	123	●		:
DrPc	Latin	6448	FB2_Salsa 2	4 / 4	1	123	●		:
DrPc	Latin	6449	FC2_Salsa 2	4 / 4	2	123	●		:
DrPc	Latin	6450	MA1_AfroCuban	4 / 4	4	200	●		"Power Standard Kit 1"
DrPc	Latin	6451	MB1_AfroCuban	4 / 4	4	200	●		:
DrPc	Latin	6452	MC1_AfroCuban	4 / 4	4	200	●		:
DrPc	Latin	6453	FA1_AfroCuban	4 / 4	1	200	●		:
DrPc	Latin	6454	FB1_AfroCuban	4 / 4	1	200	●		:
DrPc	Latin	6455	FC1_AfroCuban	4 / 4	1	200	●		:
DrPc	Latin	6456	BA1_AfroCuban	4 / 4	1	200	●		:
DrPc	Latin	6457	EA1_AfroCuban	4 / 4	6	200	●		:
DrPc	Latin	6458	EB1_AfroCuban	4 / 4	5	200	●		:
DrPc	Latin	6459	MA2_AfroCuban	4 / 4	4	200	●		"Pop Latin Kit"
DrPc	Latin	6460	MB2_AfroCuban	4 / 4	4	200	●		:
DrPc	Latin	6461	MC2_AfroCuban	4 / 4	4	200	●		:
DrPc	Latin	6462	FA2_AfroCuban	4 / 4	1	200	●		:
DrPc	Latin	6463	FB2_AfroCuban	4 / 4	1	200	●		:
DrPc	Latin	6464	FC2_AfroCuban	4 / 4	1	200	●		:
DrPc	Latin	6465	BA2_AfroCuban	4 / 4	1	200	●		:
DrPc	Latin	6466	EA2_AfroCuban	4 / 4	6	200	●		:
DrPc	Latin	6467	EB2_AfroCuban	4 / 4	5	200	●		:
DrPc	Latin	6468	MA1_Montuno	4 / 4	2	100	●		"Dry Standard Kit"

Main Category	Sub Category	ARP No.	ARP Name	Time Signature	Length	Original Tempo	Accent	Random SFX	Voice Type
DrPc	Latin	6469	MB1_Montuno	4 / 4	2	100	●		"Dry Standard Kit"
DrPc	Latin	6470	MC1_Montuno	4 / 4	2	100	●		:
DrPc	Latin	6471	MD1_Montuno	4 / 4	2	100	●		:
DrPc	Latin	6472	IA1_Montuno	4 / 4	2	100	●		:
DrPc	Latin	6473	FA1_Montuno	4 / 4	1	100	●		:
DrPc	Latin	6474	FB1_Montuno	4 / 4	1	100	●		:
DrPc	Latin	6475	FC1_Montuno	4 / 4	2	100	●		:
DrPc	Latin	6476	MA2_Montuno	4 / 4	4	100	●		"Latin Percussion Kit"
DrPc	Latin	6477	MB2_Montuno	4 / 4	4	100	●		:
DrPc	Latin	6478	MC2_Montuno	4 / 4	4	100	●		:
DrPc	Latin	6479	MD2_Montuno	4 / 4	4	100	●		:
DrPc	Latin	6480	IA2_Montuno	4 / 4	4	100	●		:
DrPc	Latin	6481	FA2_Montuno	4 / 4	1	100	●		:
DrPc	Latin	6482	FB2_Montuno	4 / 4	1	100	●		:
DrPc	Latin	6483	FC2_Montuno	4 / 4	4	100	●		:
DrPc	Latin	6484	MA1_Brazil Samba	4 / 4	4	96	●		"Power Standard Kit 1"
DrPc	Latin	6485	MB1_Brazil Samba	4 / 4	4	96	●		:
DrPc	Latin	6486	MC1_Brazil Samba	4 / 4	4	96	●		:
DrPc	Latin	6487	FA1_Brazil Samba	4 / 4	1	96	●		:
DrPc	Latin	6488	FB1_Brazil Samba	4 / 4	1	96	●		:
DrPc	Latin	6489	FC1_Brazil Samba	4 / 4	1	96	●		:
DrPc	Latin	6490	BA1_Brazil Samba	4 / 4	1	96	●		:
DrPc	Latin	6491	EA1_Brazil Samba	4 / 4	4	96	●		:
DrPc	Latin	6492	EB1_Brazil Samba	4 / 4	4	96	●		:
DrPc	Latin	6493	MA2_Brazil Samba	4 / 4	4	96	●		"Pop Latin Kit"
DrPc	Latin	6494	MB2_Brazil Samba	4 / 4	4	96	●		:
DrPc	Latin	6495	MC2_Brazil Samba	4 / 4	4	96	●		:
DrPc	Latin	6496	FA2_Brazil Samba	4 / 4	1	96	●		:
DrPc	Latin	6497	FB2_Brazil Samba	4 / 4	1	96	●		:
DrPc	Latin	6498	FC2_Brazil Samba	4 / 4	1	96	●		:
DrPc	Latin	6499	BA2_Brazil Samba	4 / 4	1	96	●		:
DrPc	Latin	6500	EA2_Brazil Samba	4 / 4	4	96	●		:
DrPc	Latin	6501	EB2_Brazil Samba	4 / 4	4	96	●		:
DrPc	Latin	6502	MA_Samba	4 / 4	4	120	●		"Dry Standard Kit"
DrPc	Latin	6503	MB_Samba	4 / 4	4	120	●		:
DrPc	Latin	6504	MC_Samba	4 / 4	4	120	●		:
DrPc	Latin	6505	MD_Samba	4 / 4	4	120	●		:
DrPc	Latin	6506	IA_Samba	4 / 4	2	120	●		:
DrPc	Latin	6507	FA_Samba	4 / 4	1	120	●		:
DrPc	Latin	6508	FB_Samba	4 / 4	1	120	●		:
DrPc	Latin	6509	FC_Samba	4 / 4	2	120	●		:
DrPc	Latin	6510	MA_Bomba	4 / 4	4	99	●		"Pop Latin Kit"
DrPc	Latin	6511	MB_Bomba	4 / 4	4	99	●		:
DrPc	Latin	6512	MC_Bomba	4 / 4	4	99	●		:
DrPc	Latin	6513	FA_Bomba	4 / 4	1	99	●		:
DrPc	Latin	6514	FB_Bomba	4 / 4	1	99	●		:
DrPc	Latin	6515	FC_Bomba	4 / 4	1	99	●		:
DrPc	Latin	6516	BA_Bomba	4 / 4	1	99	●		:
DrPc	Latin	6517	EA_Bomba	4 / 4	3	99	●		:
DrPc	Latin	6518	EB_Bomba	4 / 4	3	99	●		:
DrPc	Latin	6519	MA1_Bossa	4 / 4	4	124	●		"Brush Kit"
DrPc	Latin	6520	MB1_Bossa	4 / 4	4	124	●		:
DrPc	Latin	6521	MC1_Bossa	4 / 4	4	124	●		:
DrPc	Latin	6522	FA1_Bossa	4 / 4	1	124	●		:
DrPc	Latin	6523	FB1_Bossa	4 / 4	1	124	●		:
DrPc	Latin	6524	FC1_Bossa	4 / 4	1	124	●		:
DrPc	Latin	6525	BA1_Bossa	4 / 4	1	124	●		:
DrPc	Latin	6526	EA1_Bossa	4 / 4	4	123	●		:
DrPc	Latin	6527	EB1_Bossa	4 / 4	4	123	●		:
DrPc	Latin	6528	MA2_Bossa	4 / 4	4	124	●		:
DrPc	Latin	6529	MB2_Bossa	4 / 4	4	124	●		:
DrPc	Latin	6530	MC2_Bossa	4 / 4	4	124	●		:
DrPc	Latin	6531	FA2_Bossa	4 / 4	1	124	●		:
DrPc	Latin	6532	FB2_Bossa	4 / 4	1	124	●		:
DrPc	Latin	6533	FC2_Bossa	4 / 4	1	124	●		:
DrPc	Latin	6534	BA2_Bossa	4 / 4	1	124	●		:
DrPc	Latin	6535	EA2_Bossa	4 / 4	4	123	●		:
DrPc	Latin	6536	EB2_Bossa	4 / 4	4	123	●		:
DrPc	Latin	6537	MA_Merengue	4 / 4	4	130	●		"Pop Latin Kit"
DrPc	Latin	6538	MB_Merengue	4 / 4	4	130	●		:
DrPc	Latin	6539	MC_Merengue	4 / 4	4	130	●		:
DrPc	Latin	6540	FA_Merengue	4 / 4	1	130	●		:
DrPc	Latin	6541	FB_Merengue	4 / 4	1	130	●		:
DrPc	Latin	6542	FC_Merengue	4 / 4	1	130	●		:
DrPc	Latin	6543	BA_Merengue	4 / 4	1	130	●		:
DrPc	Latin	6544	EA_Merengue	4 / 4	3	130	●		:
DrPc	Latin	6545	EB_Merengue	4 / 4	3	130	●		:
DrPc	Latin	6546	MA_Guaguanco	4 / 4	4	120	●		:
DrPc	Latin	6547	MB_Guaguanco	4 / 4	4	120	●		:
DrPc	Latin	6548	MC_Guaguanco	4 / 4	4	120	●		:
DrPc	Latin	6549	FA_Guaguanco	4 / 4	1	120	●		:
DrPc	Latin	6550	FB_Guaguanco	4 / 4	1	120	●		:
DrPc	Latin	6551	FC_Guaguanco	4 / 4	1	120	●		:

Main Category	Sub Category	ARP No.	ARP Name	Time Signature	Length	Original Tempo	Accent	Random SFX	Voice Type
DrPc	Latin	6552	BA_Guaguanco	4 / 4	1	120	●		"Pop Latin Kit"
DrPc	Latin	6553	EA_Guaguanco	4 / 4	3	120	●		:
DrPc	Latin	6554	EB_Guaguanco	4 / 4	3	120	●		:
DrPc	Latin	6555	MA_Latin	4 / 4	4	120	●		"Latin Percussion Kit"
DrPc	Latin	6556	MB_Latin	4 / 4	4	120	●		:
DrPc	Latin	6557	MC_Latin	4 / 4	4	120	●		:
DrPc	Latin	6558	MD_Latin	4 / 4	4	120	●		:
DrPc	Latin	6559	ME_Latin	4 / 4	4	120	●		:
DrPc	Latin	6560	MA_Latin Rock	4 / 4	2	120	●		"Dry Standard Kit"
DrPc	Latin	6561	MB_Latin Rock	4 / 4	2	120	●		:
DrPc	Latin	6562	MC_Latin Rock	4 / 4	2	120	●		:
DrPc	Latin	6563	MD_Latin Rock	4 / 4	4	120	●		:
DrPc	Latin	6564	IA_Latin Rock	4 / 4	2	120	●		:
DrPc	Latin	6565	FA_Latin Rock	4 / 4	1	120	●		:
DrPc	Latin	6566	FB_Latin Rock	4 / 4	1	120	●		:
DrPc	Latin	6567	FC_Latin Rock	4 / 4	1	120	●		:
DrPc	Latin	6568	MA1_Disco Latin	4 / 4	4	100	●		:
DrPc	Latin	6569	MB1_Disco Latin	4 / 4	4	100	●		:
DrPc	Latin	6570	MC1_Disco Latin	4 / 4	4	100	●		:
DrPc	Latin	6571	FA1_Disco Latin	4 / 4	1	100	●		:
DrPc	Latin	6572	FB1_Disco Latin	4 / 4	1	100	●		:
DrPc	Latin	6573	FC1_Disco Latin	4 / 4	1	100	●		:
DrPc	Latin	6574	BA1_Disco Latin	4 / 4	1	100	●		:
DrPc	Latin	6575	MA2_Disco Latin	4 / 4	4	100	●		"Latin Percussion Kit"
DrPc	Latin	6576	MB2_Disco Latin	4 / 4	4	100	●		:
DrPc	Latin	6577	MC2_Disco Latin	4 / 4	4	100	●		:
DrPc	Latin	6578	FA2_Disco Latin	4 / 4	1	100	●		:
DrPc	Latin	6579	FB2_Disco Latin	4 / 4	1	100	●		:
DrPc	Latin	6580	FC2_Disco Latin	4 / 4	1	100	●		:
DrPc	Latin	6581	BA2_Disco Latin	4 / 4	1	100	●		:
DrPc	Latin	6582	MA_Latin House	4 / 4	4	138	●		"House Kit 1"
DrPc	Latin	6583	FB_Latin House	4 / 4	4	138	●		:
DrPc	Latin	6584	FC_Latin House	4 / 4	4	138	●		:
DrPc	World	6585	MA_ReggaeShffle	4 / 4	4	90	●		"Power Standard Kit 1"
DrPc	World	6586	MB_ReggaeShffle	4 / 4	4	90	●		:
DrPc	World	6587	MC_ReggaeShffle	4 / 4	4	90	●		:
DrPc	World	6588	FA_ReggaeShffle	4 / 4	1	90	●		:
DrPc	World	6589	FB_ReggaeShffle	4 / 4	1	90	●		:
DrPc	World	6590	FC_ReggaeShffle	4 / 4	1	90	●		:
DrPc	World	6591	BA_ReggaeShffle	4 / 4	1	90	●		:
DrPc	World	6592	EA_ReggaeShffle	4 / 4	3	90	●		:
DrPc	World	6593	EB_ReggaeShffle	4 / 4	4	90	●		:
DrPc	World	6594	MA_Jumbo Reggae	4 / 4	4	100	●		"Trance Kit"
DrPc	World	6595	MB_Jumbo Reggae	4 / 4	4	100	●		:
DrPc	World	6596	MC_Jumbo Reggae	4 / 4	4	100	●		:
DrPc	World	6597	FA_Jumbo Reggae	4 / 4	1	100	●		:
DrPc	World	6598	FB_Jumbo Reggae	4 / 4	1	100	●		:
DrPc	World	6599	FC_Jumbo Reggae	4 / 4	1	100	●		:
DrPc	World	6600	BA_Jumbo Reggae	4 / 4	1	100	●		:
DrPc	World	6601	EA_Jumbo Reggae	4 / 4	3	100	●		:
DrPc	World	6602	EB_Jumbo Reggae	4 / 4	3	100	●		:
DrPc	World	6603	MA1_Reggae 1	4 / 4	4	102	●		"Dry Standard Kit"
DrPc	World	6604	MB1_Reggae 1	4 / 4	4	102	●		:
DrPc	World	6605	MC1_Reggae 1	4 / 4	4	80	●		:
DrPc	World	6606	MD1_Reggae 1	4 / 4	4	90	●		:
DrPc	World	6607	IA1_Reggae 1	4 / 4	4	102	●		:
DrPc	World	6608	FA1_Reggae 1	4 / 4	1	96	●		:
DrPc	World	6609	FB1_Reggae 1	4 / 4	1	102	●		:
DrPc	World	6610	FC1_Reggae 1	4 / 4	4	96	●		:
DrPc	World	6611	MA2_Reggae 1	4 / 4	4	102	●		"Percussion Kit"
DrPc	World	6612	MB2_Reggae 1	4 / 4	4	102	●		:
DrPc	World	6613	MC2_Reggae 1	4 / 4	4	80	●		:
DrPc	World	6614	MD2_Reggae 1	4 / 4	4	90	●		:
DrPc	World	6615	IA2_Reggae 1	4 / 4	4	102	●		:
DrPc	World	6616	FC2_Reggae 1	4 / 4	4	96	●		:
DrPc	World	6617	MA_Reggae 2	4 / 4	2	92	●		"Dry Standard Kit"
DrPc	World	6618	MB_Reggae 2	4 / 4	2	92	●		:
DrPc	World	6619	MC_Reggae 2	4 / 4	2	92	●		:
DrPc	World	6620	MD_Reggae 2	4 / 4	2	92	●		:
DrPc	World	6621	IA_Reggae 2/a	4 / 4	1	92	●		:
DrPc	World	6622	IA_Reggae 2/b	4 / 4	1	92	●		:
DrPc	World	6623	FA_Reggae 2	4 / 4	1	92	●		:
DrPc	World	6624	FB_Reggae 2	4 / 4	1	92	●		:
DrPc	World	6625	FC_Reggae 2	4 / 4	1	92	●		:
DrPc	World	6626	MA1_RumbaFlamenc	4 / 4	4	106	●		"Power Standard Kit 1"
DrPc	World	6627	MB1_RumbaFlamenc	4 / 4	4	106	●		:
DrPc	World	6628	MC1_RumbaFlamenc	4 / 4	4	106	●		:
DrPc	World	6629	FA1_RumbaFlamenc	4 / 4	1	106	●		:
DrPc	World	6630	FB1_RumbaFlamenc	4 / 4	1	106	●		:
DrPc	World	6631	FC1_RumbaFlamenc	4 / 4	1	106	●		:
DrPc	World	6632	BA1_RumbaFlamenc	4 / 4	1	106	●		:
DrPc	World	6633	EA1_RumbaFlamenc	4 / 4	3	106	●		:
DrPc	World	6634	EB1_RumbaFlamenc	4 / 4	3	106	●		:

Main Category	Sub Category	ARP No.	ARP Name	Time Signature	Length	Original Tempo	Accent	Random SFX	Voice Type
DrPc	World	6635	MA2_RumbaFlamenc	4 / 4	4	106	●		"Pop Latin Kit"
DrPc	World	6636	MB2_RumbaFlamenc	4 / 4	4	106	●		:
DrPc	World	6637	MC2_RumbaFlamenc	4 / 4	4	106	●		:
DrPc	World	6638	FA2_RumbaFlamenc	4 / 4	1	106	●		:
DrPc	World	6639	FB2_RumbaFlamenc	4 / 4	1	106	●		:
DrPc	World	6640	FC2_RumbaFlamenc	4 / 4	1	106	●		:
DrPc	World	6641	BA2_RumbaFlamenc	4 / 4	1	106	●		:
DrPc	World	6642	EA2_RumbaFlamenc	4 / 4	3	106	●		:
DrPc	World	6643	EB2_RumbaFlamenc	4 / 4	3	106	●		:
DrPc	World	6644	MA_Spanish Pop	4 / 4	2	120	●		"Hyper Standard Kit"
DrPc	World	6645	MB_Spanish Pop	4 / 4	2	120	●		:
DrPc	World	6646	MC_Spanish Pop	4 / 4	2	120	●		:
DrPc	World	6647	MD_Spanish Pop	4 / 4	2	120	●		:
DrPc	World	6648	MA_ModBluegrass	4 / 4	4	121	●		"Power Standard Kit 2"
DrPc	World	6649	MB_ModBluegrass	4 / 4	4	121	●		:
DrPc	World	6650	MC_ModBluegrass	4 / 4	4	121	●		:
DrPc	World	6651	FA_ModBluegrass	4 / 4	1	121	●		:
DrPc	World	6652	FB_ModBluegrass	4 / 4	1	121	●		:
DrPc	World	6653	FC_ModBluegrass	4 / 4	1	121	●		:
DrPc	World	6654	BA_ModBluegrass	4 / 4	1	121	●		:
DrPc	World	6655	EA_ModBluegrass	4 / 4	6	121	●		:
DrPc	World	6656	IA_Spanish Pop/a	4 / 4	1	120	●		"Hyper Standard Kit"
DrPc	World	6657	IA_Spanish Pop/b	4 / 4	1	120	●		:
DrPc	World	6658	FA_Spanish Pop	4 / 4	1	120	●		:
DrPc	World	6659	FB_Spanish Pop	4 / 4	1	120	●		:
DrPc	World	6660	FC_Spanish Pop	4 / 4	1	120	●		:
DrPc	World	6661	MA_Irish Hymn	3 / 4	4	70	●		"Power Standard Kit 2"
DrPc	World	6662	MB_Irish Hymn	3 / 4	4	70	●		:
DrPc	World	6663	MC_Irish Hymn	3 / 4	4	70	●		:
DrPc	World	6664	FA_Irish Hymn	3 / 4	1	70	●		:
DrPc	World	6665	FB_Irish Hymn	3 / 4	1	70	●		:
DrPc	World	6666	FC_Irish Hymn	3 / 4	1	70	●		:
DrPc	World	6667	BA_Irish Hymn	3 / 4	1	70	●		:
DrPc	World	6668	EA_Irish Hymn	3 / 4	5	70	●		:
DrPc	World	6669	EB_Irish Hymn	3 / 4	5	70	●		:
DrPc	World	6670	MA1_Turkish Pop	4 / 4	4	101	●		"Arabic Mixed Kit"
DrPc	World	6671	MB1_Turkish Pop	4 / 4	4	101	●		:
DrPc	World	6672	MC1_Turkish Pop	4 / 4	4	101	●		:
DrPc	World	6673	MD1_Turkish Pop	4 / 4	4	101	●		:
DrPc	World	6674	FA1_Turkish Pop	4 / 4	1	101	●		:
DrPc	World	6675	FB1_Turkish Pop	4 / 4	1	101	●		:
DrPc	World	6676	FC1_Turkish Pop	4 / 4	1	101	●		:
DrPc	World	6677	FD1_Turkish Pop	4 / 4	1	101	●		:
DrPc	World	6678	MA2_Turkish Pop	4 / 4	4	101	●		"Hip Hop Kit 1"
DrPc	World	6679	MB2_Turkish Pop	4 / 4	4	101	●		:
DrPc	World	6680	MC2_Turkish Pop	4 / 4	4	101	●		:
DrPc	World	6681	MD2_Turkish Pop	4 / 4	4	101	●		:
DrPc	World	6682	FA2_Turkish Pop	4 / 4	1	101	●		:
DrPc	World	6683	FB2_Turkish Pop	4 / 4	1	101	●		:
DrPc	World	6684	FC2_Turkish Pop	4 / 4	1	101	●		:
DrPc	World	6685	FD2_Turkish Pop	4 / 4	1	101	●		:
DrPc	World	6686	MA1_TurkishDance	4 / 4	4	130	●		"Arabic Mixed Kit"
DrPc	World	6687	MB1_TurkishDance	4 / 4	4	130	●		:
DrPc	World	6688	MC1_TurkishDance	4 / 4	4	130	●		:
DrPc	World	6689	MD1_TurkishDance	4 / 4	4	130	●		:
DrPc	World	6690	FA1_TurkishDance	4 / 4	1	130	●		:
DrPc	World	6691	FB1_TurkishDance	4 / 4	1	130	●		:
DrPc	World	6692	FC1_TurkishDance	4 / 4	1	130	●		:
DrPc	World	6693	FD1_TurkishDance	4 / 4	1	130	●		:
DrPc	World	6694	MA2_TurkishDance	4 / 4	4	130	●		"Hip Hop Kit 1"
DrPc	World	6695	MB2_TurkishDance	4 / 4	4	130	●		:
DrPc	World	6696	MC2_TurkishDance	4 / 4	4	130	●		:
DrPc	World	6697	MD2_TurkishDance	4 / 4	4	130	●		:
DrPc	World	6698	FA2_TurkishDance	4 / 4	1	130	●		:
DrPc	World	6699	FB2_TurkishDance	4 / 4	1	130	●		:
DrPc	World	6700	FC2_TurkishDance	4 / 4	1	130	●		:
DrPc	World	6701	FD2_TurkishDance	4 / 4	1	130	●		:
DrPc	World	6702	MA1_Turkish	4 / 4	2	105	●		"Arabic Mixed Kit"
DrPc	World	6703	MB1_Turkish	4 / 4	2	105	●		:
DrPc	World	6704	MC1_Turkish	9 / 8	2	125	●		:
DrPc	World	6705	MD1_Turkish	9 / 8	2	125	●		:
DrPc	World	6706	ME1_Turkish	4 / 4	2	105	●		:
DrPc	World	6707	MF1_Turkish	4 / 4	2	105	●		:
DrPc	World	6708	IA1_Turkish/a	4 / 4	1	86	●		:
DrPc	World	6709	IA1_Turkish/b	4 / 4	1	86	●		:
DrPc	World	6710	FA1_Turkish	4 / 4	1	120	●		:
DrPc	World	6711	MA2_Turkish	4 / 4	2	105	●		:
DrPc	World	6712	MB2_Turkish	4 / 4	2	105	●		:
DrPc	World	6713	MC2_Turkish	9 / 8	2	125	●		:
DrPc	World	6714	MD2_Turkish	9 / 8	2	125	●		:
DrPc	World	6715	ME2_Turkish	4 / 4	2	105	●		:
DrPc	World	6716	MF2_Turkish	4 / 4	2	105	●		:
DrPc	World	6717	IA_Turkish/a	4 / 4	1	86	●		:

Main Category	Sub Category	ARP No.	ARP Name	Time Signature	Length	Original Tempo	Accent	Random SFX	Voice Type
DrPc	World	6718	IA_Turkish/b	4 / 4	1	86	●		"Arabic Mixed Kit"
DrPc	World	6719	FA2_Turkish	4 / 4	1	120	●		:
DrPc	World	6720	MA1_TurkishEuro1	4 / 4	4	112	●		"Analog T9 Kit"
DrPc	World	6721	MB1_TurkishEuro1	4 / 4	4	112	●		:
DrPc	World	6722	MC1_TurkishEuro1	4 / 4	4	112	●		:
DrPc	World	6723	FA1_TurkishEuro1	4 / 4	1	112	●		:
DrPc	World	6724	FB1_TurkishEuro1	4 / 4	1	112	●		:
DrPc	World	6725	FC1_TurkishEuro1	4 / 4	1	112	●		:
DrPc	World	6726	BA1_TurkishEuro1	4 / 4	1	112	●		:
DrPc	World	6727	EA1_TurkishEuro1	4 / 4	3	112	●		:
DrPc	World	6728	MA2_TurkishEuro1	4 / 4	4	112	●		"Turkish Kit"
DrPc	World	6729	MB2_TurkishEuro1	4 / 4	4	112	●		:
DrPc	World	6730	MC2_TurkishEuro1	4 / 4	4	112	●		:
DrPc	World	6731	FA2_TurkishEuro1	4 / 4	1	112	●		:
DrPc	World	6732	FB2_TurkishEuro1	4 / 4	1	112	●		:
DrPc	World	6733	FC2_TurkishEuro1	4 / 4	1	112	●		:
DrPc	World	6734	BA2_TurkishEuro1	4 / 4	1	112	●		:
DrPc	World	6735	EA2_TurkishEuro1	4 / 4	3	112	●		:
DrPc	World	6736	MA1_TurkishEuro2	4 / 4	4	120	●		"Nu Hip Hop Kit 1"
DrPc	World	6737	MB1_TurkishEuro2	4 / 4	4	120	●		:
DrPc	World	6738	MC1_TurkishEuro2	4 / 4	4	120	●		:
DrPc	World	6739	FA1_TurkishEuro2	4 / 4	1	120	●		:
DrPc	World	6740	FB1_TurkishEuro2	4 / 4	1	120	●		:
DrPc	World	6741	FC1_TurkishEuro2	4 / 4	1	120	●		:
DrPc	World	6742	BA1_TurkishEuro2	4 / 4	1	120	●		:
DrPc	World	6743	EA1_TurkishEuro2	4 / 4	3	120	●		:
DrPc	World	6744	MA2_TurkishEuro2	4 / 4	4	120	●		"Turkish Kit"
DrPc	World	6745	MB2_TurkishEuro2	4 / 4	4	120	●		:
DrPc	World	6746	MC2_TurkishEuro2	4 / 4	4	120	●		:
DrPc	World	6747	FA2_TurkishEuro2	4 / 4	1	120	●		:
DrPc	World	6748	FB2_TurkishEuro2	4 / 4	1	120	●		:
DrPc	World	6749	FC2_TurkishEuro2	4 / 4	1	120	●		:
DrPc	World	6750	BA2_TurkishEuro2	4 / 4	1	120	●		:
DrPc	World	6751	EA2_TurkishEuro2	4 / 4	3	120	●		:
DrPc	World	6752	MA1_Saeidy	4 / 4	2	120	●		"Hip Hop Kit 3"
DrPc	World	6753	MB1_Saeidy	4 / 4	2	120	●		:
DrPc	World	6754	MC1_Saeidy	4 / 4	4	120	●		:
DrPc	World	6755	FA1_Saeidy	4 / 4	1	120	●		:
DrPc	World	6756	FB1_Saeidy	4 / 4	1	120	●		:
DrPc	World	6757	FC1_Saeidy	4 / 4	1	120	●		:
DrPc	World	6758	BA1_Saeidy	4 / 4	1	120	●		:
DrPc	World	6759	EA1_Saeidy	4 / 4	4	120	●		:
DrPc	World	6760	MA2_Saeidy	4 / 4	2	120	●		"Turkish Kit"
DrPc	World	6761	MB2_Saeidy	4 / 4	2	120	●		:
DrPc	World	6762	MC2_Saeidy	4 / 4	4	120	●		:
DrPc	World	6763	FA2_Saeidy	4 / 4	1	120	●		:
DrPc	World	6764	FB2_Saeidy	4 / 4	1	120	●		:
DrPc	World	6765	FC2_Saeidy	4 / 4	1	120	●		:
DrPc	World	6766	BA2_Saeidy	4 / 4	1	120	●		:
DrPc	World	6767	EA2_Saeidy	4 / 4	4	120	●		:
DrPc	World	6768	MA_PercussionMaster	4 / 4	2	110	●		PercussionMaster Kit
DrPc	World	6769	MB_PercussionMaster	4 / 4	2	110	●		:
DrPc	World	6770	MC_PercussionMaster	4 / 4	2	110	●		:
DrPc	World	6771	MD_PercussionMaster	4 / 4	2	110	●		:
DrPc	World	6772	ME_PercussionMaster	4 / 4	4	110	●		:
DrPc	World	6773	MA_8Z Djembe	4 / 4	2	100	●		"8Z Djembe"
DrPc	World	6774	MB_8Z Djembe	4 / 4	2	100	●		:
DrPc	World	6775	MC_8Z Djembe	4 / 4	2	100	●		:
DrPc	World	6776	MD_8Z Djembe	4 / 4	2	100	●		:
DrPc	World	6777	BA_8Z Djembe	4 / 4	2	100	●		:
DrPc	World	6778	BB_8Z Djembe	4 / 4	2	100	●		:
DrPc	World	6779	MA_8Z Cajon	4 / 4	2	110	●		"8Z Cajon"
DrPc	World	6780	MB_8Z Cajon	4 / 4	2	110	●		:
DrPc	World	6781	MC_8Z Cajon	4 / 4	2	110	●		:
DrPc	World	6782	MD_8Z Cajon	4 / 4	2	110	●		:
DrPc	World	6783	EA_8Z Cajon	4 / 4	3	110	●		:
DrPc	World	6784	MA_Japan	4 / 4	4	103	●		"Japan Kit"
DrPc	World	6785	MB_Japan	4 / 4	4	103	●		:
DrPc	World	6786	MC_Japan	4 / 4	4	103	●		:
DrPc	World	6787	MD_Japan	4 / 4	2	103	●		:
DrPc	World	6788	EA_Japan	4 / 4	4	103	●		:
DrPc	Genrl	6789	MA_Orchestra	4 / 4	4	102	●		"Orchestra Kit"
DrPc	Genrl	6790	MC_Orchestra	4 / 4	8	102	●		:
DrPc	Genrl	6791	MD_Orchestra	4 / 4	4	102	●		:
DrPc	Genrl	6792	FA_Orchestra	4 / 4	1	102	●		:
DrPc	Genrl	6793	MA_Nu Orchestra	4 / 4	4	120	●		"Nu Orchestra Kit"
DrPc	Genrl	6794	MB_Nu Orchestra	4 / 4	4	120	●		:
DrPc	Genrl	6795	MC_Nu Orchestra	4 / 4	4	120	●		:
DrPc	Genrl	6796	MD_Nu Orchestra	4 / 4	2	120	●		:
DrPc	Genrl	6797	ME_Nu Orchestra	4 / 4	1	120	●		:
DrPc	Genrl	6798	MF_Nu Orchestra	4 / 4	4	120	●		:
DrPc	Genrl	6799	8Beat Slice1	4 / 4	1	135	●		"Power Standard Kit 1"
DrPc	Genrl	6800	8Beat Slice2	4 / 4	1	135	●		:

Main Category	Sub Category	ARP No.	ARP Name	Time Signature	Length	Original Tempo	Accent	Random SFX	Voice Type
DrPc	Genrl	6801	8Beat Slice3	4 / 4	1	135	●		"Power Standard Kit 1"
DrPc	Genrl	6802	16BeatSlice1	4 / 4	1	135	●		:
DrPc	Genrl	6803	16BeatSlice2	4 / 4	1	135	●		:
DrPc	Genrl	6804	1Bar Slice	4 / 4	1	135	●		:
DrPc	Genrl	6805	1BarRndSlice	4 / 4	1	135	●		:
DrPc	Genrl	6806	Roll 1	4 / 4	1	120	●		:
DrPc	Genrl	6807	Roll 2	4 / 4	1	120	●		:
DrPc	Genrl	6808	Roll 3	4 / 4	1	120	●		:
DrPc	Genrl	6809	Roll 4	4 / 4	1	120	●		:
DrPc	Genrl	6810	Linear	4 / 4	1	120	●		:
Seq	Rock	6811	MA_AlternaRock2 _ES	4 / 4	4	100			Syn Comp/Lead
Seq	Rock	6812	MB_AlternaRock2 _ES	4 / 4	4	100			:
Seq	Rock	6813	MC_AlternaRock2 _ES	4 / 4	4	100			:
Seq	Rock	6814	FA_AlternaRock2 _ES	4 / 4	1	100			:
Seq	Rock	6815	FB_AlternaRock2 _ES	4 / 4	1	100			:
Seq	Rock	6816	FC_AlternaRock2 _ES	4 / 4	1	100			:
Seq	Rock	6817	BA_AlternaRock2 _ES	4 / 4	2	100			:
Seq	PopRk	6818	MA1_Electro Pop	4 / 4	1	94			:
Seq	PopRk	6819	MB1_Electro Pop	4 / 4	1	94			:
Seq	PopRk	6820	MC1_Electro Pop	4 / 4	1	94			:
Seq	PopRk	6821	MD1_Electro Pop	4 / 4	1	94			:
Seq	PopRk	6822	MA2_Electro Pop	4 / 4	1	94			:
Seq	PopRk	6823	MA2_Electro Pop AF1	4 / 4	1	94			:
Seq	PopRk	6824	MA2_Electro Pop AF2	4 / 4	4	94			:
Seq	PopRk	6825	MB2_Electro Pop	4 / 4	1	94			:
Seq	PopRk	6826	MA3_Electro Pop	4 / 4	1	94			:
Seq	PopRk	6827	MB3_Electro Pop	4 / 4	4	94			:
Seq	PopRk	6828	MC3_Electro Pop	4 / 4	1	94			:
Seq	PopRk	6829	MD3_Electro Pop	4 / 4	1	94			:
Seq	PopRk	6830	ME3_Electro Pop	4 / 4	1	94			:
Seq	PopRk	6831	MA_Voxdance	4 / 4	1	90			:
Seq	PopRk	6832	MA_Voxdance AF2	4 / 4	1	90			:
Seq	PopRk	6833	MB_Voxdance	4 / 4	1	90			:
Seq	PopRk	6834	MB_Voxdance AF1	4 / 4	1	90			:
Seq	PopRk	6835	MA_Jumping	4 / 4	4	90			:
Seq	PopRk	6836	MB_Jumping	4 / 4	4	90			:
Seq	PopRk	6837	MB_Jumping AF1	4 / 4	1	90			:
Seq	PopRk	6838	MB_Jumping AF2	4 / 4	4	90			:
Seq	PopRk	6839	MA_80'sSynthRock _XS	4 / 4	4	96			:
Seq	PopRk	6840	MB_80'sSynthRock _XS	4 / 4	4	96			:
Seq	PopRk	6841	MC_80'sSynthRock _XS	4 / 4	8	96			:
Seq	PopRk	6842	FA_80'sSynthRock _XS	4 / 4	1	96			:
Seq	PopRk	6843	FB_80'sSynthRock _XS	4 / 4	1	96			:
Seq	PopRk	6844	FC_80'sSynthRock _XS	4 / 4	1	96			:
Seq	PopRk	6845	BA_80'sSynthRock _XS	4 / 4	1	96			:
Seq	PopRk	6846	EA_80'sSynthRock _XS	4 / 4	3	96			:
Seq	HipHp	6847	MC_Hip Hop 3 _ES	4 / 4	2	104			:
Seq	HipHp	6848	MD_Hip Hop 3	4 / 4	2	104			:
Seq	HipHp	6849	FB_Hip Hop 3	4 / 4	1	104			:
Seq	HipHp	6850	MA_Hip Rock 2 _XS	4 / 4	4	132			:
Seq	HipHp	6851	MB_Hip Rock 2 _XS	4 / 4	4	132			:
Seq	HipHp	6852	MC_Hip Rock 2 _XS	4 / 4	4	132			:
Seq	HipHp	6853	FA_Hip Rock 2 _XS	4 / 4	1	132			:
Seq	HipHp	6854	FB_Hip Rock 2 _XS	4 / 4	1	132			:
Seq	HipHp	6855	FC_Hip Rock 2 _XS	4 / 4	1	132			:
Seq	HipHp	6856	MA_Dancehall _XS	4 / 4	4	103			:
Seq	HipHp	6857	MB_Dancehall _XS	4 / 4	4	103			:
Seq	HipHp	6858	MD_Dancehall _XS	4 / 4	4	103			:
Seq	HipHp	6859	FA_Dancehall _XS	4 / 4	1	103			:
Seq	HipHp	6860	FB_Dancehall _XS	4 / 4	1	103			:
Seq	HipHp	6861	FD_Dancehall _XS	4 / 4	1	103			:
Seq	HipHp	6862	BA_Dancehall _XS	4 / 4	1	103			:
Seq	HipHp	6863	EA_Dancehall _XS	4 / 4	3	103			:
Seq	HipHp	6864	MA_Funky Chop	4 / 4	1	120			:
Seq	R&B-M	6865	MB_R&B Disco _ES	4 / 4	2	110			:
Seq	R&B-M	6866	MC_R&B Disco _ES	4 / 4	2	110			:
Seq	R&B-M	6867	MA_Chart R&B _XS	4 / 4	4	130			:
Seq	R&B-M	6868	MB_Chart R&B _XS	4 / 4	4	130			:
Seq	R&B-M	6869	MC_Chart R&B _XS	4 / 4	4	130			:
Seq	R&B-M	6870	FA_Chart R&B _XS	4 / 4	1	130			:
Seq	R&B-M	6871	FB_Chart R&B _XS	4 / 4	1	130			:
Seq	R&B-M	6872	FC_Chart R&B _XS	4 / 4	1	130			:
Seq	R&B-M	6873	BA_Chart R&B _XS	4 / 4	1	130			:
Seq	R&B-M	6874	EA_Chart R&B _XS	4 / 4	5	130			:
Seq	R&B-M	6875	EB_Chart R&B _XS	4 / 4	10	130			:
Seq	R&B-M	6876	MC_New R&B 3 _ES	4 / 4	2	90			:
Seq	R&B-M	6877	MD_New R&B 3	4 / 4	2	90			:
Seq	R&B-M	6878	FC_New R&B 3 _ES	4 / 4	2	90			:
Seq	Tekno	6879	MA1_Trance 2 _XS	4 / 4	8	135			:
Seq	Tekno	6880	MB1_Trance 2 _XS	4 / 4	8	135			:
Seq	Tekno	6881	MC1_Trance 2 _XS	4 / 4	8	135			:
Seq	Tekno	6882	FA1_Trance 2 _XS	4 / 4	1	135			:
Seq	Tekno	6883	FB1_Trance 2 _XS	4 / 4	8	135			:

Main Category	Sub Category	ARP No.	ARP Name	Time Signature	Length	Original Tempo	Accent	Random SFX	Voice Type
Seq	Tekno	6884	FC1_Trance 2 _XS	4 / 4	1	135			Syn Comp/Lead
Seq	Tekno	6885	BA1_Trance 2 _XS	4 / 4	1	135			:
Seq	Tekno	6886	MA2_Trance 2 _XS	4 / 4	8	135			:
Seq	Tekno	6887	MB2_Trance 2 _XS	4 / 4	8	135			:
Seq	Tekno	6888	MC2_Trance 2 _XS	4 / 4	8	135			:
Seq	Tekno	6889	FA2_Trance 2 _XS	4 / 4	1	135			:
Seq	Tekno	6890	FB2_Trance 2 _XS	4 / 4	8	135			:
Seq	Tekno	6891	FC2_Trance 2 _XS	4 / 4	1	135			:
Seq	Tekno	6892	BA2_Trance 2 _XS	4 / 4	1	135			:
Seq	Tekno	6893	MA1_Trance 2 _ES	4 / 4	8	135			:
Seq	Tekno	6894	MB1_Trance 2 _ES	4 / 4	8	135			:
Seq	Tekno	6895	MC1_Trance 2 _ES	4 / 4	8	135			:
Seq	Tekno	6896	FA1_Trance 2 _ES	4 / 4	1	135			:
Seq	Tekno	6897	FB1_Trance 2 _ES	4 / 4	8	135			:
Seq	Tekno	6898	BA1_Trance 2 _ES	4 / 4	1	135			:
Seq	Tekno	6899	MA2_Trance 2 _ES	4 / 4	8	135			:
Seq	Tekno	6900	MB2_Trance 2 _ES	4 / 4	8	135			:
Seq	Tekno	6901	MC2_Trance 2 _ES	4 / 4	8	135			:
Seq	Tekno	6902	FA2_Trance 2 _ES	4 / 4	1	135			:
Seq	Tekno	6903	FB2_Trance 2 _ES	4 / 4	8	135			:
Seq	Tekno	6904	FC2_Trance 2 _ES	4 / 4	1	135			:
Seq	Tekno	6905	BA2_Trance 2 _ES	4 / 4	1	135			:
Seq	Tekno	6906	MA_Trance 3 _XS	4 / 4	2	140			:
Seq	Tekno	6907	MB_Trance 3 _XS	4 / 4	2	140			:
Seq	Tekno	6908	MC_Trance 3 _XS	4 / 4	3	140			:
Seq	Tekno	6909	FA_Trance 3 _XS	4 / 4	2	140			:
Seq	Tekno	6910	FB_Trance 3 _XS	4 / 4	2	140			:
Seq	Tekno	6911	FC_Trance 3 _XS	4 / 4	4	140			:
Seq	Tekno	6912	BA_Trance 3 _XS	4 / 4	1	140			:
Seq	Tekno	6913	MA_Trance 3 _ES	4 / 4	2	140			:
Seq	Tekno	6914	MB_Trance 3 _ES	4 / 4	2	140			:
Seq	Tekno	6915	MC_Trance 3 _ES	4 / 4	3	140			:
Seq	Tekno	6916	FA_Trance 3 _ES	4 / 4	2	140			:
Seq	Tekno	6917	FB_Trance 3 _ES	4 / 4	2	140			:
Seq	Tekno	6918	FC_Trance 3 _ES	4 / 4	4	140			:
Seq	Tekno	6919	BA_Trance 3 _ES	4 / 4	1	140			:
Seq	Tekno	6920	MB1_Trance 5	4 / 4	1	140			:
Seq	Tekno	6921	MA2_Trance 5	4 / 4	4	140			:
Seq	Tekno	6922	MD2_Trance 5	4 / 4	4	140			:
Seq	Tekno	6923	IA3_Trance 5	4 / 4	1	140			:
Seq	Tekno	6924	FC3_Trance 5	4 / 4	1	140			:
Seq	Tekno	6925	MB4_Trance 5	4 / 4	4	140			:
Seq	Tekno	6926	FA4_Trance 5	4 / 4	4	140			:
Seq	Tekno	6927	FA5_Trance 5	4 / 4	4	140			:
Seq	Tekno	6928	FC5_Trance 5	4 / 4	1	140			:
Seq	Tekno	6929	MC6_Trance 5	4 / 4	4	140			:
Seq	Tekno	6930	MA_PsycheSeq1 _ES	4 / 4	4	140			:
Seq	Tekno	6931	MA_PsycheSeq2 _ES	4 / 4	1	140			:
Seq	Tekno	6932	MA_PsycheSeq3 _ES	4 / 4	2	140			:
Seq	Tekno	6933	MA_PsycheSeq4 _ES	4 / 4	4	140			:
Seq	Tekno	6934	MA_PsycheSeq5 _ES	4 / 4	6	140			:
Seq	Tekno	6935	MA_TrancePhras1	4 / 4	1	130			:
Seq	Tekno	6936	MA_TrancePhras2	4 / 4	1	130			:
Seq	Tekno	6937	MA_TrancePhras3	4 / 4	1	130			:
Seq	Tekno	6938	MA_TrancePhras4	4 / 4	1	130			:
Seq	Tekno	6939	MA_TrancePhras5	4 / 4	1	130			:
Seq	Tekno	6940	MA_TrancePhras6	4 / 4	1	130			:
Seq	Tekno	6941	MA_TrancePhras7	4 / 4	1	130			:
Seq	Tekno	6942	MA_TrancePhras8	4 / 4	2	145			:
Seq	Tekno	6943	MA_TrancePhras9	4 / 4	1	145			:
Seq	Tekno	6944	MA_TrancePhrs10	4 / 4	2	145			:
Seq	Tekno	6945	MA_TrancePhrs11	4 / 4	2	145			:
Seq	Tekno	6946	MA_TrancePhrs12	4 / 4	2	145			:
Seq	Tekno	6947	MA_TrancePhrs13	4 / 4	2	145			:
Seq	Tekno	6948	MA_TrancePhrs14	4 / 4	1	145			:
Seq	Tekno	6949	MA_TrancePhrs15	4 / 4	1	145			:
Seq	Tekno	6950	MA_PsychePhras1 _ES	4 / 4	1	143			:
Seq	Tekno	6951	MA_PsychePhras2 _ES	4 / 4	1	143			:
Seq	Tekno	6952	MA_PsychePhras3 _ES	4 / 4	2	143			:
Seq	Tekno	6953	MA_PsychePhras4 _ES	4 / 4	2	143			:
Seq	Tekno	6954	MA_PsychePhras5 _ES	4 / 4	2	143			:
Seq	Tekno	6955	MA_HyperTrance1 _ES	4 / 4	1	143			:
Seq	Tekno	6956	MA_HyperTrance2 _ES	4 / 4	2	143			:
Seq	Tekno	6957	MA_HyperTrance3 _ES	4 / 4	1	143			:
Seq	Tekno	6958	MA_HyperTrance4 _ES	4 / 4	1	143			:
Seq	Tekno	6959	MA_HyperTrance5 _ES	4 / 4	1	143			:
Seq	Tekno	6960	MA1_Trance Vision	4 / 4	1	134			:
Seq	Tekno	6961	MB1_Trance Vision	4 / 4	1	134			:
Seq	Tekno	6962	MC1_Trance Vision	4 / 4	1	134			:
Seq	Tekno	6963	MD1_Trance Vision	4 / 4	1	134			:
Seq	Tekno	6964	ME1_Trance Vision	4 / 4	1	134			:
Seq	Tekno	6965	MA2_Trance Vision	4 / 4	1	134			:
Seq	Tekno	6966	MA2_TranceVision AF2	4 / 4	1	134			:

Main Category	Sub Category	ARP No.	ARP Name	Time Signature	Length	Original Tempo	Accent	Random SFX	Voice Type
Seq	Tekno	6967	MA2_TrncVision AF1&2	4 / 4	1	134			Syn Comp/Lead
Seq	Tekno	6968	MB2_Trance Vision	4 / 4	1	134			:
Seq	Tekno	6969	MB2_TranceVision AF1	4 / 4	1	134			:
Seq	Tekno	6970	MB2_TranceVision AF2	4 / 4	4	134			:
Seq	Tekno	6971	MB2_TrncVision AF1&2	4 / 4	4	134			:
Seq	Tekno	6972	MA1_Dream Trance	4 / 4	1	140			:
Seq	Tekno	6973	MA1_Dream Trance AF1	4 / 4	1	140			:
Seq	Tekno	6974	MB1_Dream Trance	4 / 4	1	140			:
Seq	Tekno	6975	MC1_Dream Trance	4 / 4	1	140			:
Seq	Tekno	6976	MC1_Dream Trance AF1	4 / 4	1	140			:
Seq	Tekno	6977	MC1_Dream Trance AF2	4 / 4	1	140			:
Seq	Tekno	6978	MC1_Dream Trnc AF1&2	4 / 4	1	140			:
Seq	Tekno	6979	MA1_Electrix	4 / 4	1	119			:
Seq	Tekno	6980	MA1_Electrix AF1	4 / 4	1	119			:
Seq	Tekno	6981	MB1_Electrix	4 / 4	1	119			:
Seq	Tekno	6982	MA2_Electrix	4 / 4	1	119			:
Seq	Tekno	6983	MB2_Electrix	4 / 4	1	119			:
Seq	Tekno	6984	MA1_Cool Breakz	4 / 4	1	116			:
Seq	Tekno	6985	MA1_Cool Breakz AF1	4 / 4	1	116			:
Seq	Tekno	6986	MA1_Cool Breakz AF2	4 / 4	1	116			:
Seq	Tekno	6987	MB1_Cool Breakz	4 / 4	1	116			:
Seq	Tekno	6988	MA2_Cool Breakz	4 / 4	1	116			:
Seq	Tekno	6989	MA1_Synthlines	4 / 4	1	124			:
Seq	Tekno	6990	MA1_Synthlines AF1	4 / 4	1	124			:
Seq	Tekno	6991	MB1_Synthlines	4 / 4	1	124			:
Seq	Tekno	6992	MB1_Synthlines AF1	4 / 4	1	124			:
Seq	Tekno	6993	MB1_Synthlines AF2	4 / 4	1	124			:
Seq	Tekno	6994	MB1_Synthlines AF1&2	4 / 4	1	124			:
Seq	Tekno	6995	MC1_Synthlines	4 / 4	1	124			:
Seq	Tekno	6996	MD1_Synthlines	4 / 4	1	124			:
Seq	Tekno	6997	ME1_Synthlines	4 / 4	4	124			:
Seq	Tekno	6998	MA2_Synthlines	4 / 4	1	124			:
Seq	Tekno	6999	MB2_Synthlines	4 / 4	1	124			:
Seq	Tekno	7000	MC2_Synthlines	4 / 4	1	124			:
Seq	Tekno	7001	MD2_Synthlines	4 / 4	1	124			:
Seq	Tekno	7002	MA3_Synthlines	4 / 4	1	124			:
Seq	Tekno	7003	MB3_Synthlines	4 / 4	1	124			:
Seq	Tekno	7004	MC3_Synthlines	4 / 4	1	124			:
Seq	Tekno	7005	MD3_Synthlines	4 / 4	1	124			:
Seq	Tekno	7006	MA1_Acid Breaks	4 / 4	1	98			:
Seq	Tekno	7007	MB1_Acid Breaks	4 / 4	1	98			:
Seq	Tekno	7008	MC1_Acid Breaks	4 / 4	1	98			:
Seq	Tekno	7009	MD1_Acid Breaks	4 / 4	1	98			:
Seq	Tekno	7010	ME1_Acid Breaks	4 / 4	1	98			:
Seq	Tekno	7011	MF1_Acid Breaks	4 / 4	1	98			:
Seq	Tekno	7012	MG1_Acid Breaks	4 / 4	1	98			:
Seq	Tekno	7013	MH1_Acid Breaks	4 / 4	1	98			:
Seq	Tekno	7014	MA2_Acid Breaks	4 / 4	1	98			:
Seq	Tekno	7015	MB2_Acid Breaks	4 / 4	1	98			:
Seq	Tekno	7016	MC2_Acid Breaks	4 / 4	4	98			:
Seq	Tekno	7017	MD2_Acid Breaks	4 / 4	1	98			:
Seq	Tekno	7018	ME2_Acid Breaks	4 / 4	1	98			:
Seq	Tekno	7019	MF2_Acid Breaks	4 / 4	4	98			:
Seq	Tekno	7020	MF2_AcidBreaks AF1&2	4 / 4	4	98			:
Seq	Tekno	7021	MA_T-Line Seq _ES	4 / 4	1	140			:
Seq	Tekno	7022	MA_TeknoPhrs1 /1 _XS	4 / 4	2	130			:
Seq	Tekno	7023	MA_TeknoPhrs1 /2 _XS	4 / 4	1	130			:
Seq	Tekno	7024	MA_TeknoPhrs1 /3 _XS	4 / 4	1	130			:
Seq	Tekno	7025	MA_TeknoPhrs1 /4 _XS	4 / 4	1	130			:
Seq	Tekno	7026	MA_TeknoPhrs1 /5 _XS	4 / 4	1	110			:
Seq	Tekno	7027	MA_TeknoPhrs1 /6 _XS	4 / 4	1	100			:
Seq	Tekno	7028	MA_TeknoPhras2 /1	4 / 4	2	120			:
Seq	Tekno	7029	MA_TeknoPhras2 /2	4 / 4	2	120			:
Seq	Tekno	7030	MA_TeknoPhras2 /3	4 / 4	2	120			:
Seq	Tekno	7031	MA_TeknoAttack1 _ES	4 / 4	2	143			:
Seq	Tekno	7032	MA_TeknoAttack2 _ES	4 / 4	1	143			:
Seq	Tekno	7033	MA_TeknoAttack3 _ES	4 / 4	1	143			:
Seq	Tekno	7034	MA_TeknoAttack4 _ES	4 / 4	1	143			:
Seq	Tekno	7035	MA_TeknoAttack5 _ES	4 / 4	1	143			:
Seq	Tekno	7036	MA_Acid A1	4 / 4	2	127			:
Seq	Tekno	7037	MA_Acid A2	4 / 4	2	127			:
Seq	Tekno	7038	MA_Acid A2 AF1	4 / 4	2	90			:
Seq	Tekno	7039	MA_Acid A3	4 / 4	2	127			:
Seq	Tekno	7040	MA_Acid A3 AF1	4 / 4	2	90			:
Seq	Tekno	7041	MA_Acid A4	4 / 4	2	127			:
Seq	Tekno	7042	MA_Acid A5	4 / 4	2	127			:
Seq	Tekno	7043	MA_Acid A6	4 / 4	2	127			:
Seq	Tekno	7044	MA_Acid A6 AF1	4 / 4	2	127			:
Seq	Tekno	7045	MA_Acid A6 AF2	4 / 4	2	127			:
Seq	Tekno	7046	MA_Acid B1	4 / 4	2	127			:
Seq	Tekno	7047	MA_Acid B2	4 / 4	2	127			:
Seq	Tekno	7048	MA_Acid B3	4 / 4	2	127			:
Seq	Tekno	7049	MA_Acid B4	4 / 4	2	127			:

Main Category	Sub Category	ARP No.	ARP Name	Time Signature	Length	Original Tempo	Accent	Random SFX	Voice Type
Seq	Tekno	7050	MA_Acid B5	4 / 4	2	127			Syn Comp/Lead
Seq	Tekno	7051	MA_Acid B6	4 / 4	2	127			:
Seq	Tekno	7052	MA_Acid C1	4 / 4	2	127			:
Seq	Tekno	7053	MA_Acid C2	4 / 4	2	127			:
Seq	Tekno	7054	MA_Acid C3	4 / 4	2	127			:
Seq	Tekno	7055	MA_Acid C4	4 / 4	2	127			:
Seq	Tekno	7056	MA_Acid C5	4 / 4	2	127			:
Seq	Tekno	7057	MA_Acid C6	4 / 4	2	127			:
Seq	Tekno	7058	MA_Electro1	4 / 4	1	130			:
Seq	Tekno	7059	MA_Electro2	4 / 4	1	130			:
Seq	Tekno	7060	MA_Electro3	4 / 4	1	130			:
Seq	Tekno	7061	MA_Electro3 AF2	4 / 4	1	123			:
Seq	Tekno	7062	MA_Electro4	4 / 4	1	130			:
Seq	Tekno	7063	MA_Electro5	4 / 4	1	130			:
Seq	Tekno	7064	MA_Electro6	4 / 4	1	130			:
Seq	Tekno	7065	MA_Electro7	4 / 4	1	130			:
Seq	Tekno	7066	MA_Electro8	4 / 4	1	130			:
Seq	Tekno	7067	MA_Electro9	4 / 4	1	130			:
Seq	Tekno	7068	MA_Electro10	4 / 4	1	130			:
Seq	Tekno	7069	MA_Electro10 AF2	4 / 4	1	123			:
Seq	Tekno	7070	MA_Electro11	4 / 4	1	130			:
Seq	Tekno	7071	MA_Electro12	4 / 4	1	130			:
Seq	Tekno	7072	MA_Electro13	4 / 4	1	130			:
Seq	Tekno	7073	MA_Electro14	4 / 4	1	130			:
Seq	Tekno	7074	MA_CompuBass1	4 / 4	1	130			:
Seq	Tekno	7075	MA_CompuBass2	4 / 4	1	130			:
Seq	Tekno	7076	MA_CompuBass2 AF2	4 / 4	8	134			:
Seq	Tekno	7077	MA_CompuBass3	4 / 4	1	130			:
Seq	Tekno	7078	MA_CompuBass4	4 / 4	1	130			:
Seq	Tekno	7079	MA_Digi Seq1 _ES	4 / 4	2	106			:
Seq	Tekno	7080	MA_Digi Seq2 _ES	4 / 4	2	106			:
Seq	Tekno	7081	MA_Digi Seq3 _ES	4 / 4	2	106			:
Seq	Tekno	7082	MA_Digi Seq4 _ES	4 / 4	1	106			:
Seq	Tekno	7083	MA_Digi Seq5 _ES	4 / 4	1	106			:
Seq	Tekno	7084	MA_DigySeq1 _ES	4 / 4	4	135			:
Seq	Tekno	7085	MA_DigySeq2 _ES	4 / 4	2	135			:
Seq	Tekno	7086	MA_DigySeq3 _ES	4 / 4	2	135			:
Seq	Tekno	7087	MA_DigySeq4 _ES	4 / 4	2	135			:
Seq	Tekno	7088	MA_DigySeq5 _ES	4 / 4	1	135			:
Seq	Tekno	7089	MA_Seq S&H1	4 / 4	4	120			:
Seq	Tekno	7090	MA_Seq S&H2	4 / 4	4	120			:
Seq	Tekno	7091	MA_Poly Arp1	4 / 4	1	120			:
Seq	Tekno	7092	MA_Poly Arp2	4 / 4	1	120			:
Seq	Tekno	7093	MA_Boiler1	4 / 4	1	120			:
Seq	Tekno	7094	MA_Boiler2	4 / 4	1	120			:
Seq	Tekno	7095	MA_Boiler3	4 / 4	1	120			:
Seq	Tekno	7096	MA_Boiler4	4 / 4	1	110			:
Seq	Tekno	7097	MA_Bees1	4 / 4	1	118			:
Seq	Tekno	7098	MA_Bees2	4 / 4	1	118			:
Seq	Tekno	7099	MA_Bees3	4 / 4	1	118			:
Seq	Tekno	7100	MA_Syncopa1	4 / 4	2	120			:
Seq	Tekno	7101	MA_Tek Echo1	4 / 4	2	120			:
Seq	Tekno	7102	MA_Super Arp	4 / 4	2	120			:
Seq	Tekno	7103	MA_Space Arp	4 / 4	2	120			:
Seq	Tekno	7104	MA_Step Line	4 / 4	1	120			:
Seq	Tekno	7105	MA_Acid Line	4 / 4	1	120			:
Seq	Tekno	7106	MA_Ana Seq	4 / 4	1	120			:
Seq	Tekno	7107	MA_Ascorbic	4 / 4	1	150			:
Seq	Tekno	7108	MA_Beeperz	4 / 4	2	104			:
Seq	Tekno	7109	MA_Doves	4 / 4	1	150			:
Seq	Tekno	7110	MA_Europluk	4 / 4	1	105			:
Seq	Tekno	7111	MA_Hardcore	4 / 4	3	150			:
Seq	Tekno	7112	MA_Harmo	4 / 4	1	150			:
Seq	Tekno	7113	MA_Lamb	4 / 4	1	125			:
Seq	Tekno	7114	MA_Ocean	4 / 4	1	120			:
Seq	Tekno	7115	MA_Orbit	4 / 4	1	140			:
Seq	Tekno	7116	MA_Pitzy	4 / 4	1	105			:
Seq	Tekno	7117	MA_Planet	4 / 4	1	120			:
Seq	Tekno	7118	MA_Poly Dance	4 / 4	1	120			:
Seq	Tekno	7119	MA_Popcorn	4 / 4	1	120			:
Seq	Tekno	7120	MA_Puls Line	4 / 4	2	120			:
Seq	Tekno	7121	MA_Simple	4 / 4	2	150			:
Seq	Tekno	7122	MA_Split Arp	4 / 4	1	120			:
Seq	Tekno	7123	MA_Step Seq	4 / 4	1	120			:
Seq	Tekno	7124	MA_SyncopaEcho	4 / 4	2	120			:
Seq	Tekno	7125	MA_Tek Bubble	4 / 4	1	128			:
Seq	Tekno	7126	MA_Thips	4 / 4	1	100			:
Seq	Tekno	7127	MA_Waggle	4 / 4	1	140			:
Seq	Tekno	7128	MA_TranceRtm1	4 / 4	4	135			:
Seq	Tekno	7129	MA_TranceRtm2	4 / 4	4	140			:
Seq	Tekno	7130	MA_TranceRtm3	4 / 4	4	140			:
Seq	Tekno	7131	MA_Trance Stab	4 / 4	2	140			:
Seq	Tekno	7132	MA_T-Line Chd	4 / 4	4	140			:

Main Category	Sub Category	ARP No.	ARP Name	Time Signature	Length	Original Tempo	Accent	Random SFX	Voice Type
Seq	Tekno	7133	MA_Syncopa2	4 / 4	2	120			Syn Comp/Lead
Seq	Tekno	7134	MA_Tek Echo2	4 / 4	2	120			:
Seq	Tekno	7135	MA_Fugue	4 / 4	2	120			:
Seq	Tekno	7136	MA_Rave Swp	4 / 4	4	135			:
Seq	Tekno	7137	MA_Rosync	4 / 4	1	120			:
Seq	Tekno	7138	MA_Synclavk	4 / 4	2	140			:
Seq	Tekno	7139	MA_HiFive	4 / 4	1	118			:
Seq	House	7140	MC1_Dream Dance	4 / 4	1	136			:
Seq	House	7141	FC1_Dream Dance	4 / 4	1	136			:
Seq	House	7142	MA2_Dream Dance	4 / 4	1	136			:
Seq	House	7143	MD2_Dream Dance	4 / 4	1	136			:
Seq	House	7144	FC2_Dream Dance	4 / 4	1	136			:
Seq	House	7145	MB3_Dream Dance	4 / 4	1	136			:
Seq	House	7146	MD1_Ibiza	4 / 4	2	135			:
Seq	House	7147	IA1_Ibiza	4 / 4	8	135			:
Seq	House	7148	MB2_Ibiza _ES	4 / 4	2	135			:
Seq	House	7149	MD2_Ibiza _ES	4 / 4	2	135			:
Seq	House	7150	MB3_Ibiza _ES	4 / 4	2	135			:
Seq	House	7151	MC3_Ibiza _ES	4 / 4	2	135			:
Seq	House	7152	MA_Retro Pop	4 / 4	1	126			:
Seq	House	7153	MD_Retro Pop	4 / 4	2	126			:
Seq	House	7154	FC_Retro Pop	4 / 4	1	100			:
Seq	House	7155	IA_Dream Dance	4 / 4	2	136			:
Seq	House	7156	MA_Ibiza	4 / 4	1	135			:
Seq	House	7157	MB_Ibiza	4 / 4	2	135			:
Seq	House	7158	MC_Ibiza	4 / 4	2	135			:
Seq	House	7159	MD_Ibiza	4 / 4	2	135			:
Seq	House	7160	IA_Ibiza	4 / 4	8	135			:
Seq	House	7161	FA_Ibiza	4 / 4	1	135			:
Seq	House	7162	FB_Ibiza	4 / 4	1	135			:
Seq	House	7163	MB_Garage 2	4 / 4	2	127			:
Seq	House	7164	MC_Garage 2	4 / 4	2	127			:
Seq	House	7165	MD_Garage 2	4 / 4	2	127			:
Seq	House	7166	IA_Garage 2	4 / 4	2	127			:
Seq	House	7167	FA_Garage 2	4 / 4	2	127			:
Seq	D&B	7168	MA_Big Beat 1 _ES	4 / 4	4	115			:
Seq	D&B	7169	MB_Big Beat 1 _ES	4 / 4	4	115			:
Seq	D&B	7170	MC_Big Beat 1 _ES	4 / 4	4	115			:
Seq	D&B	7171	FA_Big Beat 1 _ES	4 / 4	1	115			:
Seq	D&B	7172	FB_Big Beat 1 _ES	4 / 4	1	115			:
Seq	D&B	7173	FC_Big Beat 1 _ES	4 / 4	1	115			:
Seq	D&B	7174	BA_Big Beat 1 _ES	4 / 4	1	115			:
Seq	D&B	7175	MA_Big Step1 _ES	4 / 4	2	116			:
Seq	D&B	7176	MA_Big Step2 _ES	4 / 4	1	116			:
Seq	D&B	7177	MA_Big Step3 _ES	4 / 4	2	116			:
Seq	D&B	7178	MA_Big Step4 _ES	4 / 4	1	116			:
Seq	D&B	7179	MA_Big Step5 _ES	4 / 4	1	116			:
Seq	D&B	7180	MA_Breakbeats 1 _ES	4 / 4	4	115			:
Seq	D&B	7181	MB_Breakbeats 1 _ES	4 / 4	4	115			:
Seq	D&B	7182	MC_Breakbeats 1 _ES	4 / 4	2	115			:
Seq	D&B	7183	FA_Breakbeats 1 _ES	4 / 4	1	115			:
Seq	D&B	7184	FB_Breakbeats 1 _ES	4 / 4	1	115			:
Seq	D&B	7185	FC_Breakbeats 1 _ES	4 / 4	1	115			:
Seq	D&B	7186	BA_Breakbeats 1 _ES	4 / 4	1	115			:
Seq	D&B	7187	MA_Breakbeats 2 _ES	4 / 4	4	88			:
Seq	D&B	7188	MB_Breakbeats 2 _ES	4 / 4	4	88			:
Seq	D&B	7189	MC_Breakbeats 2 _ES	4 / 4	4	88			:
Seq	D&B	7190	FA_Breakbeats 2 _ES	4 / 4	1	88			:
Seq	D&B	7191	FB_Breakbeats 2 _ES	4 / 4	1	88			:
Seq	D&B	7192	FC_Breakbeats 2 _ES	4 / 4	1	88			:
Seq	D&B	7193	BA_Breakbeats 2 _ES	4 / 4	1	88			:
Seq	Chill	7194	MA1_Ambient 1 _ES	4 / 4	4	102			:
Seq	Chill	7195	MB1_Ambient 1 _ES	4 / 4	4	102			:
Seq	Chill	7196	MC1_Ambient 1 _ES	4 / 4	4	102			:
Seq	Chill	7197	FA1_Ambient 1 _ES	4 / 4	1	102			:
Seq	Chill	7198	FB1_Ambient 1 _ES	4 / 4	1	102			:
Seq	Chill	7199	FC1_Ambient 1 _ES	4 / 4	1	102			:
Seq	Chill	7200	BA1_Ambient 1 _ES	4 / 4	1	102			:
Seq	Chill	7201	MB2_Ambient 1 _ES	4 / 4	4	102			:
Seq	Chill	7202	MC2_Ambient 1 _ES	4 / 4	4	102			:
Seq	Chill	7203	FB2_Ambient 1 _ES	4 / 4	1	102			:
Seq	Chill	7204	FC2_Ambient 1 _ES	4 / 4	1	102			:
Seq	Chill	7205	BA2_Ambient 1 _ES	4 / 4	1	102			:
Seq	Chill	7206	MA1_Ambient 2 _XS	4 / 4	4	111			:
Seq	Chill	7207	MB1_Ambient 2 _XS	4 / 4	2	111			:
Seq	Chill	7208	MC1_Ambient 2 _XS	4 / 4	4	111			:
Seq	Chill	7209	FB1_Ambient 2 _XS	4 / 4	8	111			:
Seq	Chill	7210	FC1_Ambient 2 _XS	4 / 4	1	111			:
Seq	Chill	7211	MA2_Ambient 2 _XS	4 / 4	4	111			:
Seq	Chill	7212	MC2_Ambient 2 _XS	4 / 4	4	111			:
Seq	Chill	7213	FA2_Ambient 2 _XS	4 / 4	1	111			:
Seq	Chill	7214	FB2_Ambient 2 _XS	4 / 4	8	111			:
Seq	Chill	7215	FC2_Ambient 2 _XS	4 / 4	1	111			:

Main Category	Sub Category	ARP No.	ARP Name	Time Signature	Length	Original Tempo	Accent	Random SFX	Voice Type
Seq	Chill	7216	BA2_Ambient 2 _XS	4 / 4	2	111			Syn Comp/Lead
Seq	Chill	7217	MA1_Ambient 2 _ES	4 / 4	4	111			:
Seq	Chill	7218	MB1_Ambient 2 _ES	4 / 4	2	111			:
Seq	Chill	7219	MC1_Ambient 2 _ES	4 / 4	4	111			:
Seq	Chill	7220	FB1_Ambient 2 _ES	4 / 4	8	111			:
Seq	Chill	7221	FC1_Ambient 2 _ES	4 / 4	1	111			:
Seq	Chill	7222	MA2_Ambient 2 _ES	4 / 4	4	111			:
Seq	Chill	7223	MC2_Ambient 2 _ES	4 / 4	4	111			:
Seq	Chill	7224	FA2_Ambient 2 _ES	4 / 4	1	111			:
Seq	Chill	7225	FB2_Ambient 2 _ES	4 / 4	8	111			:
Seq	Chill	7226	FC2_Ambient 2 _ES	4 / 4	1	111			:
Seq	Chill	7227	BA2_Ambient 2 _ES	4 / 4	2	111			:
Seq	Chill	7228	MA1_Ambient 3	4 / 4	4	75			:
Seq	Chill	7229	MA2_Ambient 3	4 / 4	4	75			:
Seq	Chill	7230	MA3_Ambient 3	4 / 4	2	75			:
Seq	Chill	7231	MA_Ambient 4	4 / 4	1	80			:
Seq	Chill	7232	MA_Ambient 4 AF2	4 / 4	1	80			:
Seq	Chill	7233	MC_Chill Out	4 / 4	4	79			:
Seq	Chill	7234	MD_Chill Out	4 / 4	2	79			:
Seq	Chill	7235	FB_Chill Out	4 / 4	1	79			:
Seq	Chill	7236	MA_Synth Pop	4 / 4	1	90			:
Seq	Chill	7237	MB_Synth Pop	4 / 4	1	90			:
Seq	Chill	7238	MD_Synth Pop	4 / 4	1	90			:
Seq	Chill	7239	IA_Synth Pop	4 / 4	1	90			:
Seq	Chill	7240	FC_Synth Pop	4 / 4	1	90			:
Seq	Chill	7241	MA_Chill Out	4 / 4	2	79			:
Seq	Chill	7242	MB_Chill Out	4 / 4	2	79			:
Seq	Chill	7243	FA_Chill Out	4 / 4	1	79			:
Seq	Chill	7244	MA_ChillInChord1	4 / 4	1	90			:
Seq	Chill	7245	MA_ChillInChord1 AF2	4 / 4	1	90			:
Seq	Chill	7246	MA_ChillInChord1AF1&2	4 / 4	1	90			:
Seq	Chill	7247	MA_ChillInChord2	4 / 4	1	90			:
Seq	Chill	7248	MA_ChillInChord2 AF1	4 / 4	1	90			:
Seq	Chill	7249	MA_ChillInChord3	4 / 4	1	90			:
Seq	Chill	7250	MA_ChillInChord4	4 / 4	1	90			:
Seq	Chill	7251	MA_ChillInChord5	4 / 4	1	90			:
Seq	Chill	7252	MA_ChillInChord6	4 / 4	1	90			:
Seq	Chill	7253	MA_ChillInChord6 AF1	4 / 4	1	90			:
Seq	Chill	7254	MA1_Eighties	4 / 4	1	120			:
Seq	Chill	7255	MB1_Eighties	4 / 4	1	120			:
Seq	Chill	7256	MC1_Eighties	4 / 4	1	120			:
Seq	Chill	7257	MD1_Eighties	4 / 4	1	120			:
Seq	Chill	7258	MA2_Eighties	4 / 4	1	120			:
Seq	Chill	7259	MA2_Eighties AF1	4 / 4	1	120			:
Seq	Chill	7260	MA2_Eighties AF2	4 / 4	1	120			:
Seq	Chill	7261	MB2_Eighties	4 / 4	1	120			:
Seq	Chill	7262	MB2_Eighties AF1	4 / 4	1	120			:
Seq	Chill	7263	MA3_Eighties	4 / 4	1	120			:
Seq	Chill	7264	MA3_Eighties AF1	4 / 4	1	120			:
Seq	Chill	7265	MB3_Eighties	4 / 4	1	120			:
Seq	Latin	7266	MA_Latin House	4 / 4	4	138			:
Seq	Latin	7267	MB_Latin House	4 / 4	2	138			:
Seq	World	7268	MA_TurkishEuro2 _XS	4 / 4	4	120			:
Seq	World	7269	MB_TurkishEuro2 _XS	4 / 4	4	120			:
Seq	World	7270	MC_TurkishEuro2 _XS	4 / 4	4	120			:
Seq	World	7271	FA_TurkishEuro2 _XS	4 / 4	1	120			:
Seq	World	7272	FB_TurkishEuro2 _XS	4 / 4	1	120			:
Seq	World	7273	FC_TurkishEuro2 _XS	4 / 4	1	120			:
Seq	World	7274	BA_TurkishEuro2 _XS	4 / 4	1	120			:
Seq	World	7275	EA_TurkishEuro2 _XS	4 / 4	3	120			:
Seq	Genrl	7276	MA_SynArp1	4 / 4	1	130			:
Seq	Genrl	7277	MA_SynArp2	4 / 4	2	130			:
Seq	Genrl	7278	MA_SynArp3	4 / 4	1	130			:
Seq	Genrl	7279	MA_SynArp4	4 / 4	1	130			:
Seq	Genrl	7280	MA_SynArp5	4 / 4	1	130			:
Seq	Genrl	7281	MA_SynArp6	4 / 4	1	124			:
Seq	Genrl	7282	MA_SynArp7	4 / 4	1	120			:
Seq	Genrl	7283	MA_SynArp8	4 / 4	1	130			:
Seq	Genrl	7284	MA_SynArp9	4 / 4	1	130			:
Seq	Genrl	7285	MA_SynArp10	4 / 4	1	130			:
Seq	Genrl	7286	MA_SynArp11	4 / 4	2	130			:
Seq	Genrl	7287	MA_SynArp12	4 / 4	1	90			:
Seq	Genrl	7288	MA_SynArp13	4 / 4	2	124			:
Seq	Genrl	7289	MA_SynArp14	4 / 4	1	130			:
Seq	Genrl	7290	MA_SynArp15	4 / 4	1	130			:
Seq	Genrl	7291	MA_SynArp16	4 / 4	1	130			:
Seq	Genrl	7292	MA_SynArp17	4 / 4	1	90			:
Seq	Genrl	7293	MA_SynArp18	4 / 4	1	130			:
Seq	Genrl	7294	MA_SynArp19	4 / 4	1	120			:
Seq	Genrl	7295	MA_SynArp20	4 / 4	1	120			:
Seq	Genrl	7296	MA_SynArp21	4 / 4	1	124			:
Seq	Genrl	7297	MA_SynArp22	4 / 4	1	120			:
Seq	Genrl	7298	MA_SynArp23	4 / 4	1	138			:

Main Category	Sub Category	ARP No.	ARP Name	Time Signature	Length	Original Tempo	Accent	Random SFX	Voice Type
Seq	Genrl	7299	MA_SynArp24	4 / 4	1	138			Syn Comp/Lead
Seq	Genrl	7300	MA_SynArp25	4 / 4	1	120			:
Seq	Genrl	7301	MA_SynArp26	4 / 4	1	120			:
Seq	Genrl	7302	MA_SynArp27	4 / 4	1	120			:
Seq	Genrl	7303	MA_SynArp28	1 / 4	10	125			:
Seq	Genrl	7304	MA_SynArp29	4 / 4	5	120			:
Seq	Genrl	7305	MA_Melody1	4 / 4	1	70			:
Seq	Genrl	7306	MA_Melody2	4 / 4	1	120			:
Seq	Genrl	7307	MA_Melody3	4 / 4	1	70			:
Seq	Genrl	7308	MA_Melody4	4 / 4	1	70			:
Seq	Genrl	7309	MA_Melody5	4 / 4	1	70			:
Seq	Genrl	7310	MA_Melody6	4 / 4	1	70			:
Seq	Genrl	7311	MA_Melody7	4 / 4	1	70			:
Seq	Genrl	7312	MA_Melody8	4 / 4	1	70			:
Seq	Genrl	7313	MA_Melody9	4 / 4	1	70			:
Seq	Genrl	7314	MA_Melody10	4 / 4	1	70			:
Seq	Genrl	7315	MA_Melody11	4 / 4	1	70			:
Seq	Genrl	7316	MA_Melody12	4 / 4	1	70			:
Seq	Genrl	7317	MA_Melody13	4 / 4	1	70			:
Seq	Genrl	7318	MA_Melody14	4 / 4	1	70			:
Seq	Genrl	7319	MA_Melody15	4 / 4	1	70			:
Seq	Genrl	7320	MA_Melody16	4 / 4	1	70			:
Seq	Genrl	7321	MA_Melody17	4 / 4	1	70			:
Seq	Genrl	7322	MA_Melody17 AF1	4 / 4	1	119			:
Seq	Genrl	7323	MA_Melody17 AF2	4 / 4	1	119			:
Seq	Genrl	7324	MA_Melody18	4 / 4	1	70			:
Seq	Genrl	7325	MA_Melody19	4 / 4	1	70			:
Seq	Genrl	7326	MA_Melody20	4 / 4	1	70			:
Seq	Genrl	7327	MA_Melody21	4 / 4	1	70			:
Seq	Genrl	7328	MA_Melody22	4 / 4	1	70			:
Seq	Genrl	7329	MA_Melody23	4 / 4	1	70			:
Seq	Genrl	7330	MA_Melody24	4 / 4	1	70			:
Seq	Genrl	7331	MA_Melody25	4 / 4	1	70			:
Seq	Genrl	7332	MA_Melody26	4 / 4	1	70			:
Seq	Genrl	7333	MA_Melody27	4 / 4	1	70			:
Seq	Genrl	7334	MA_SynthPhrase1 _XS	4 / 4	1	70			:
Seq	Genrl	7335	MA_SynthPhrase2 _XS	4 / 4	1	70			:
Seq	Genrl	7336	MA_SynthPhrase3 _XS	4 / 4	1	70			:
Seq	Genrl	7337	MA_SynthPhrase4 _XS	4 / 4	1	70			:
Seq	Genrl	7338	MA_SynthPhrase5 _XS	4 / 4	1	70			:
Seq	Genrl	7339	MA_SynthPhrase6 _XS	4 / 4	1	70			:
Seq	Genrl	7340	MA_SynthPhrase7 _XS	4 / 4	1	70			:
Seq	Genrl	7341	MA_SynthPhrase8 _XS	4 / 4	1	70			:
Seq	Genrl	7342	MA_SynthPhrase9 _XS	4 / 4	1	70			:
Seq	Genrl	7343	MA_SynthPhras10 _XS	4 / 4	1	70			:
Seq	Genrl	7344	MA_SynthPhras11 _XS	4 / 4	1	70			:
Seq	Genrl	7345	MA_SynthPhras12 _XS	4 / 4	1	70			:
Seq	Genrl	7346	MA_SynthPhras13 _XS	4 / 4	1	130			:
Seq	Genrl	7347	MA_SynthPhras14 _XS	4 / 4	1	130			:
Seq	Genrl	7348	MA_SynthPhras15 _XS	4 / 4	1	130			:
Seq	Genrl	7349	MA_SynthPhras16 _XS	4 / 4	1	130			:
Seq	Genrl	7350	MA_SynthPhras17 _XS	4 / 4	1	130			:
Seq	Genrl	7351	MA_SynthPhras18 _XS	4 / 4	1	130			:
Seq	Genrl	7352	MA_SynthPhras19 _XS	4 / 4	1	130			:
Seq	Genrl	7353	MA_SynthPhras20 _XS	4 / 4	1	130			:
Seq	Genrl	7354	MA_SynthPhras21 _XS	4 / 4	1	130			:
Seq	Genrl	7355	MA_SynthPhras22 _XS	4 / 4	1	130			:
Seq	Genrl	7356	MA_SynthPhras23 _XS	4 / 4	1	130			:
Seq	Genrl	7357	MA_SynthPhras24 _XS	4 / 4	1	130			:
Seq	Genrl	7358	MA_SynthPhras25 _XS	4 / 4	1	130			:
Seq	Genrl	7359	MA_SynthPhras26 _XS	4 / 4	1	130			:
Seq	Genrl	7360	MA_SynthPhras27 _XS	4 / 4	1	130			:
Seq	Genrl	7361	MA_SynthPhras28 _XS	4 / 4	1	130			:
Seq	Genrl	7362	MA_SynthPhras29 _XS	4 / 4	1	130			:
Seq	Genrl	7363	MA_SynthPhras30 _XS	4 / 4	1	130			:
Seq	Genrl	7364	MA_SynthPhras31 _XS	4 / 4	1	130			:
Seq	Genrl	7365	MA_SynthPhras32 _XS	4 / 4	1	130			:
Seq	Genrl	7366	MA_SynthPhras33 _XS	4 / 4	1	130			:
Seq	Genrl	7367	MA_SynthPhras34 _XS	4 / 4	1	140			:
Seq	Genrl	7368	MA_SynthPhras35 _XS	4 / 4	1	130			:
Seq	Genrl	7369	MA_SynthPhras36 _XS	4 / 4	1	130			:
Seq	Genrl	7370	MA_SynthPhras37 _XS	4 / 4	1	130			:
Seq	Genrl	7371	MA_SynthPhras38 _XS	4 / 4	1	130			:
Seq	Genrl	7372	MA_SynthPhras39 _XS	4 / 4	1	130			:
Seq	Genrl	7373	MA_SynthPhras40 _XS	4 / 4	1	120			:
Seq	Genrl	7374	MA_SynthPhras41 _XS	4 / 4	1	120			:
Seq	Genrl	7375	MA_SynthPhras42 _XS	4 / 4	1	140			:
Seq	Genrl	7376	MA_SynthPhras43 _XS	4 / 4	4	140			:
Seq	Genrl	7377	MA_SynthPhras44 _XS	4 / 4	1	136			:
Seq	Genrl	7378	MA_SynthPhras45 _XS	4 / 4	1	136			:
Seq	Genrl	7379	MA_SynthPhras46 _XS	4 / 4	2	135			:
Seq	Genrl	7380	MA_SynthPhras47 _XS	4 / 4	1	130			:
Seq	Genrl	7381	MA_SynthPhras48 _XS	4 / 4	1	130			:

Main Category	Sub Category	ARP No.	ARP Name	Time Signature	Length	Original Tempo	Accent	Random SFX	Voice Type
Seq	Genrl	7382	MA_SynthPhras49 _XS	4 / 4	1	130			Syn Comp/Lead
Seq	Genrl	7383	MA_SynthPhras50 _XS	4 / 4	1	116			:
Seq	Genrl	7384	MA_SynthPhras51 _XS	4 / 4	1	100			:
Seq	Genrl	7385	MA_SynthPhras52 _XS	4 / 4	1	138			:
Seq	Genrl	7386	MA_Up Oct1	4 / 4	1	120			:
Seq	Genrl	7387	MA_Up Oct2	4 / 4	1	120			:
Seq	Genrl	7388	MA_Up Oct3	4 / 4	1	120			:
Seq	Genrl	7389	MA_Up Oct4	4 / 4	1	120			:
Seq	Genrl	7390	MA_Down Oct1	4 / 4	1	120			:
Seq	Genrl	7391	MA_Down Oct2	4 / 4	1	120			:
Seq	Genrl	7392	MA_Down Oct3	4 / 4	1	120			:
Seq	Genrl	7393	MA_Down Oct4	4 / 4	1	120			:
Seq	Genrl	7394	MA_U/D A Oct1	4 / 4	1	120			:
Seq	Genrl	7395	MA_U/D A Oct2	4 / 4	1	120			:
Seq	Genrl	7396	MA_U/D A Oct3	4 / 4	1	120			:
Seq	Genrl	7397	MA_U/D A Oct4	4 / 4	1	120			:
Seq	Genrl	7398	MA_U/D B Oct1	4 / 4	1	120			:
Seq	Genrl	7399	MA_U/D B Oct2	4 / 4	1	120			:
Seq	Genrl	7400	MA_U/D B Oct3	4 / 4	1	120			:
Seq	Genrl	7401	MA_U/D B Oct4	4 / 4	1	120			:
Seq	Genrl	7402	MA_Random Oct1	4 / 4	1	120			:
Seq	Genrl	7403	MA_Random Oct2	4 / 4	1	120			:
Seq	Genrl	7404	MA_Random Oct3	4 / 4	1	120			:
Seq	Genrl	7405	MA_Random Oct4	4 / 4	1	120			:
Seq	Genrl	7406	MA_Oct2 Up	4 / 4	1	120			:
Seq	Genrl	7407	MA_Oct4 Up	4 / 4	1	120			:
Seq	Genrl	7408	MA_Unison Up	4 / 4	1	120			:
Seq	Genrl	7409	MA_Up&Alt1	4 / 4	1	120			:
Seq	Genrl	7410	MA_Up&Down1	4 / 4	1	120			:
Seq	Genrl	7411	MA_Up&Down2	4 / 4	1	120			:
Seq	Genrl	7412	MA_Up&Down3	4 / 4	1	120			:
Seq	Genrl	7413	MA_Up&Down4	4 / 4	1	120			:
Seq	Genrl	7414	MA_Up&Random1	4 / 4	1	120			:
Seq	Genrl	7415	MA_Up&Random2	4 / 4	1	120			:
Seq	Genrl	7416	MA_Up&Random3	4 / 4	1	120			:
Seq	Genrl	7417	MA_Up&Random4	4 / 4	1	120			:
Seq	Genrl	7418	MA_Oct Seq1	4 / 4	1	130			:
Seq	Genrl	7419	MA_Oct Seq2	4 / 4	1	130			:
Seq	Genrl	7420	MA_Oct Seq3	4 / 4	1	130			:
Seq	Genrl	7421	MA_Oct Seq4	4 / 4	1	130			:
Seq	Genrl	7422	MA_Oct Seq5	4 / 4	1	130			:
Seq	Genrl	7423	MA_Oct Seq6	4 / 4	1	90			:
Seq	Genrl	7424	MA_Oct Seq7	4 / 4	1	90			:
Seq	Genrl	7425	MA_Oct Seq8	4 / 4	1	90			:
Seq	Genrl	7426	MA_Random Seq1	4 / 4	1	90			:
Seq	Genrl	7427	MA_Random Seq2	4 / 4	1	90			:
Seq	Genrl	7428	MA_Random Seq3	4 / 4	1	90			:
Seq	Genrl	7429	MA_RndmNotesSeq	4 / 4	1	70			:
Seq	Genrl	7430	MA_Vel Gruv1	4 / 4	1	134			:
Seq	Genrl	7431	MA_Vel Gruv2	4 / 4	1	134			:
Seq	Genrl	7432	MA_X-Sweep1	4 / 4	1	140			:
Seq	Genrl	7433	MA_X-Sweep2	4 / 4	1	140			:
Seq	Genrl	7434	MA_X-Sweep3	4 / 4	1	140			:
Seq	Genrl	7435	MA_Simple1	4 / 4	1	130			:
Seq	Genrl	7436	MA_Simple2	4 / 4	1	130			:
Seq	Genrl	7437	MA_Simple3	4 / 4	1	130			:
Seq	Genrl	7438	MA_Simple4	4 / 4	1	130			:
Seq	Genrl	7439	MA_Simple5	4 / 4	1	130			:
Seq	Genrl	7440	MA_Basic1	4 / 4	1	130			:
Seq	Genrl	7441	MA_Basic1 AF2	4 / 4	8	134			:
Seq	Genrl	7442	MA_Basic2	4 / 4	1	130			:
Seq	Genrl	7443	MA_Basic3	4 / 4	1	130			:
Seq	Genrl	7444	MA_FifthSQ1	4 / 4	1	130			:
Seq	Genrl	7445	MA_FifthSQ2	4 / 4	1	130			:
Seq	Genrl	7446	MA_FifthSQ3	4 / 4	1	130			:
Seq	Genrl	7447	MA_FifthSQ4	4 / 4	1	130			:
Seq	Genrl	7448	MA_FifthSQ5	4 / 4	1	130			:
Seq	Genrl	7449	MA_FifthSQ6	4 / 4	1	130			:
Seq	Genrl	7450	MA_MuteArp1	4 / 4	1	120			:
Seq	Genrl	7451	MA_MuteArp2	4 / 4	1	120			:
Seq	Genrl	7452	MA_Mute Line	4 / 4	1	134			:
Seq	Genrl	7453	MA_Chodal	4 / 4	2	150			:
Seq	Genrl	7454	MA_Wavetable8th	4 / 4	1	120			:
Seq	Genrl	7455	MA_Wavtable16th	4 / 4	1	90			:
Seq	Genrl	7456	MA_Syn Chord1	4 / 4	1	130			:
Seq	Genrl	7457	MA_Syn Chord2	4 / 4	1	90			:
Seq	Genrl	7458	MA_Syn Chord3	4 / 4	1	120			:
Seq	Genrl	7459	MA_Syn Chord4	4 / 4	1	130			:
Seq	Genrl	7460	MA_Syn Chord5	4 / 4	1	130			:
Seq	Genrl	7461	MA_Syn Chord6	4 / 4	1	130			:
Seq	Genrl	7462	MA_Syn Chord7	4 / 4	1	130			:
Seq	Genrl	7463	MA_Syn Chord8	4 / 4	1	90			:
Seq	Genrl	7464	MA_Syn Chord9	4 / 4	1	120			:

Main Category	Sub Category	ARP No.	ARP Name	Time Signature	Length	Original Tempo	Accent	Random SFX	Voice Type
Seq	Genrl	7465	MA_Syn Chord10	4 / 4	1	116			Syn Comp/Lead
Seq	Genrl	7466	MA_Syn Chord11	4 / 4	4	130			:
Seq	Genrl	7467	MA_Syn Chord12	4 / 4	1	124			:
Seq	Genrl	7468	MA_Syn Chord13	4 / 4	1	140			:
Seq	Genrl	7469	MA_Syn Chord14	4 / 4	2	130			:
Seq	Genrl	7470	MA_Syn Chord15	4 / 4	2	134			:
Seq	Genrl	7471	MA_Syn Chord16	4 / 4	1	138			:
Seq	Genrl	7472	MA_BassChord1	4 / 4	2	130			:
Seq	Genrl	7473	MA_BassChord2	4 / 4	2	130			:
Seq	Genrl	7474	MA_BassChord3	4 / 4	2	130			:
Seq	Genrl	7475	MA_BassChord4	4 / 4	2	130			:
Seq	Genrl	7476	MA_BassChord5	4 / 4	2	130			:
Seq	Genrl	7477	MA_BassChord6	4 / 4	2	130			:
Seq	Genrl	7478	MA_BassChord7	4 / 4	2	130			:
Seq	Genrl	7479	MA_BassChord8	4 / 4	2	130			:
Seq	Genrl	7480	MA_BassChord9	4 / 4	1	130			:
Seq	Genrl	7481	MA_BassChord10	4 / 4	1	130			:
Seq	Genrl	7482	MA_BassChord11	4 / 4	1	130			:
Seq	Genrl	7483	MA_BassChord12	4 / 4	1	130			:
Seq	Genrl	7484	MA_BassChord13	4 / 4	2	130			:
Seq	Genrl	7485	MA_BassChord14	4 / 4	1	130			:
Seq	Genrl	7486	MA_BassChord15	4 / 4	2	130			:
Seq	Genrl	7487	MA_BassChord16	4 / 4	1	130			:
Seq	Genrl	7488	MA_BassChord17	4 / 4	1	130			:
Seq	Genrl	7489	MA_BassChord18	4 / 4	2	130			:
Seq	Genrl	7490	MA_BassChord19	4 / 4	1	130			:
Seq	Genrl	7491	MA_BassChord20	4 / 4	1	130			:
Seq	Genrl	7492	MA_Chord AltB1	4 / 4	1	120			:
Seq	Genrl	7493	MA_Chord AltB2	4 / 4	1	120			:
Seq	Genrl	7494	MA_Chord AltB4	4 / 4	1	120			:
Seq	Genrl	7495	MA_ChordRandom1	4 / 4	1	120			:
Seq	Genrl	7496	MA_ChordRandom2	4 / 4	1	120			:
Seq	Genrl	7497	MA_ChordRandom4	4 / 4	1	120			:
Hybrd	Comb	7498	MA_Hybrid1	4 / 4	1	130			Syn Comp/Lead/Pad
Hybrd	Comb	7499	MA_Hybrid2	4 / 4	1	130			:
Hybrd	Comb	7500	MA_Hybrid3	4 / 4	1	130			:
Hybrd	Comb	7501	MA_Hybrid4	4 / 4	1	130			:
Hybrd	Comb	7502	MA_Hybrid5	4 / 4	1	95			:
Hybrd	Comb	7503	MA_Hybrid6	4 / 4	1	130			:
Hybrd	Comb	7504	MA_Hybrid7	4 / 4	1	130			:
Hybrd	Comb	7505	MA_Hybrid8	4 / 4	1	90			:
Hybrd	Comb	7506	MA_Hybrid9	4 / 4	1	130			:
Hybrd	Comb	7507	MA_Hybrid10	4 / 4	1	130			:
Hybrd	Comb	7508	MA_Hybrid11	4 / 4	1	130			:
Hybrd	Comb	7509	MA_Hybrid12	4 / 4	1	90			:
Hybrd	Comb	7510	MA_Hybrid13	4 / 4	1	130			:
Hybrd	Comb	7511	MA_Hybrid14	4 / 4	1	130			:
Hybrd	Comb	7512	MA_Hybrid15	4 / 4	1	130			:
Hybrd	Comb	7513	MA_Hybrid16	4 / 4	1	106			:
Hybrd	Comb	7514	MA_Hybrid17	4 / 4	1	130			:
Hybrd	Comb	7515	MA_Hybrid18	4 / 4	1	110			:
Hybrd	Comb	7516	MA_Hybrid19	4 / 4	1	100			:
Hybrd	Comb	7517	MA_Hybrid20	4 / 4	1	116			:
Hybrd	Comb	7518	MA_Hybrid1CF1	4 / 4	1	130			:
Hybrd	Comb	7519	MA_Hybrid1CF2	4 / 4	1	130			:
Hybrd	Comb	7520	MA_Hybrid1CF3	4 / 4	1	130			:
Hybrd	Comb	7521	MA_Hybrid1CF3 AF1&2	4 / 4	1	84			:
Hybrd	Comb	7522	MA_Hybrid1CF4	4 / 4	1	130			:
Hybrd	Comb	7523	MA_Hybrid3 CF	4 / 4	1	120			:
Hybrd	Comb	7524	MA_Hybrid21CF	4 / 4	1	100			:
Hybrd	Comb	7525	MA_Hybrid21CF AF1	4 / 4	1	119			:
Hybrd	Comb	7526	MA_Hybrid21CF AF2	4 / 4	1	119			:
Hybrd	Comb	7527	MA_Hybrid21CF AF1&2	4 / 4	1	119			:
Hybrd	Comb	7528	MA_Hybrid22CF	4 / 4	1	138			:
Hybrd	Comb	7529	MA_Hybrid23CF	4 / 4	1	130			:
Hybrd	Comb	7530	MA_Hybrid24CF	4 / 4	1	130			:
Hybrd	Comb	7531	MA_Hybrid24CF AF2	4 / 4	1	84			:
Hybrd	Comb	7532	MA_Hybrid25CF	4 / 4	1	96			:
Hybrd	Comb	7533	MA_Parade	4 / 4	2	120			:
Hybrd	Comb	7534	MA_SynPop Comb1	4 / 4	4	90			:
Hybrd	Comb	7535	MA_SynPop Comb2	4 / 4	4	90			:
Hybrd	Comb	7536	MA_Trancy1 _ES	4 / 4	1	140			:
Hybrd	Comb	7537	MA_Trancy2	4 / 4	4	140			:
Hybrd	Comb	7538	MA_Trancy3	4 / 4	16	140			:
Hybrd	Zone	7539	MA_2Z_Comb SQ1	4 / 4	2	90			:
Hybrd	Zone	7540	MA_2Z_Comb SQ2	4 / 4	1	70			:
Hybrd	Zone	7541	MA_2Z_Comb SQ3	4 / 4	1	90			:
Hybrd	Zone	7542	MA_2Z_Comb SQ4	4 / 4	1	130			:
Hybrd	Zone	7543	MA_2Z_Comb SQ5	4 / 4	2	130			:
Hybrd	Zone	7544	MA_2Z_Comb SQ6	4 / 4	2	130			:
Hybrd	Zone	7545	MA_2Z_Comb SQ7	4 / 4	1	130			:
Hybrd	Zone	7546	MA_2Z_Comb SQ8	4 / 4	1	70			:
Hybrd	Zone	7547	MA_2Z_Comb SQ9	4 / 4	2	130			:

Main Category	Sub Category	ARP No.	ARP Name	Time Signature	Length	Original Tempo	Accent	Random SFX	Voice Type
Hybrd	Zone	7548	MA_2Z_Comb SQ10	4 / 4	2	70			Syn Comp/Lead/Pad
Hybrd	Zone	7549	MA_2Z_Comb SQ11	4 / 4	1	70			:
Hybrd	Zone	7550	MA_2Z_Comb SQ12	4 / 4	1	70			:
Hybrd	Zone	7551	MA_2Z_Comb SQ13	4 / 4	2	90			:
Hybrd	Zone	7552	MA_4Z_HybVel1	4 / 4	1	96			:
Hybrd	Zone	7553	MA_4Z_HybVel2	4 / 4	1	96			:
Hybrd	Zone	7554	MA_4Z_HybVel3	4 / 4	1	96			:
Hybrd	Zone	7555	MA_4Z_HybVel4	4 / 4	1	96			:
Hybrd	Zone	7556	MA_4Z_HybVel5	4 / 4	1	96			:
Hybrd	Zone	7557	MA_4Z_HybVel6	4 / 4	1	96			:
Hybrd	Zone	7558	MA_4Z_HybVel7	4 / 4	1	96			:
Hybrd	Zone	7559	MA_4Z_HybVel7 AF1&2	4 / 4	1	123			:
Hybrd	Zone	7560	MA_4Z_HybVel8	4 / 4	1	96			:
Hybrd	Zone	7561	MA_4Z_HybVel9	4 / 4	2	120			:
Hybrd	Zone	7562	MA_4Z_HybVel10	4 / 4	2	120			:
Hybrd	Zone	7563	MA_4Z_HybVel11	4 / 4	2	120			:
Hybrd	Zone	7564	MA_4Z_HybVel12	4 / 4	2	120			:
Hybrd	Zone	7565	MA_4Z_HybVel13	4 / 4	2	120			:
Hybrd	Zone	7566	MA_4Z_HybVel14	4 / 4	2	120			:
Hybrd	Zone	7567	MA_4Z_HybVel15	4 / 4	2	120			:
Hybrd	Zone	7568	MA_4Z_HybVel16	4 / 4	2	120			:
Hybrd	Zone	7569	MA_4Z_4Zone1A	4 / 4	2	130			:
Hybrd	Zone	7570	MA_4Z_4Zone1B	4 / 4	2	130			:
Hybrd	Zone	7571	MA_4Z_4Zone1C	4 / 4	2	130			:
Hybrd	Zone	7572	MA_4Z_4Zone1D	4 / 4	2	130			:
Hybrd	Zone	7573	MA_4Z_4Zone1E	4 / 4	2	130			:
Hybrd	Zone	7574	MA_4Z_4Zone2A	4 / 4	1	130			:
Hybrd	Zone	7575	MA_4Z_4Zone2B	4 / 4	1	130			:
Hybrd	Zone	7576	MA_4Z_4Zone2C	4 / 4	1	130			:
Hybrd	Zone	7577	MA_4Z_4Zone2D	4 / 4	1	130			:
Hybrd	Zone	7578	MA_4Z_4Zone2E	4 / 4	1	130			:
Hybrd	Zone	7579	MA_4Z_4Zone3A	4 / 4	1	70			:
Hybrd	Zone	7580	MA_4Z_4Zone3B	4 / 4	1	94			:
Hybrd	Zone	7581	MA_4Z_4Zone3C	4 / 4	1	94			:
Hybrd	Zone	7582	MA_4Z_4Zone3D	4 / 4	1	94			:
Hybrd	Zone	7583	MA_4Z_4Zone3E	4 / 4	1	94			:
Hybrd	Zone	7584	MA_4Z_4Zone4A	4 / 4	1	70			:
Hybrd	Zone	7585	MA_4Z_4Zone4B	4 / 4	1	70			:
Hybrd	Zone	7586	MA_4Z_4Zone4C	4 / 4	1	70			:
Hybrd	Zone	7587	MA_4Z_4Zone4D	4 / 4	1	70			:
Hybrd	Zone	7588	MA_4Z_4Zone4E	4 / 4	1	70			:
Hybrd	Zone	7589	MA_4Z_4Zone5A	4 / 4	1	70			:
Hybrd	Zone	7590	MA_4Z_4Zone5B	4 / 4	1	70			:
Hybrd	Zone	7591	MA_4Z_4Zone5C	4 / 4	1	70			:
Hybrd	Zone	7592	MA_4Z_4Zone5D	4 / 4	1	70			:
Hybrd	Zone	7593	MA_4Z_4Zone5E	4 / 4	1	70			:
Hybrd	Zone	7594	MA_4Z_HybPrc1	4 / 4	1	130			:
Hybrd	Zone	7595	MA_4Z_HybPrc2	4 / 4	1	130			:
Hybrd	Zone	7596	MA_4Z_HybPrc3	4 / 4	1	130			:
Hybrd	Zone	7597	MA_4Z_HybPrc4	4 / 4	1	130			:
Hybrd	Zone	7598	MA_4Z_HybPrc5	4 / 4	1	130			:
Hybrd	Zone	7599	MA_4Z_HybPrc6	4 / 4	1	130			:
Hybrd	Zone	7600	MA_4Z_HybPrc7	4 / 4	1	130			:
Hybrd	Zone	7601	MA_4Z_HybPrc8	4 / 4	1	90			:
Hybrd	Zone	7602	MA_4Z_HybPrc9	4 / 4	1	90			:
Hybrd	Zone	7603	MA_4Z_HybPrc10	4 / 4	1	90			:
Hybrd	Zone	7604	MA_4Z_Ice 1 _ES	1 / 4	4	130			:
Hybrd	Zone	7605	MA_4Z_Ice 2 _ES	1 / 4	8	130			:
Hybrd	Zone	7606	MA_4Z_Ice 3	1 / 4	4	140			:
Hybrd	Zone	7607	MA_4Z_Ice 4	1 / 4	8	130			:
Hybrd	Zone	7608	MA_4Z_Ice 5	1 / 4	8	130			:
Hybrd	Zone	7609	MA_4Z_Ice 6	1 / 4	8	130			:
Hybrd	Zone	7610	MA_4Z_Ice 7	1 / 4	8	130			:
Hybrd	Zone	7611	MA_4Z_Ice 8 _ES	1 / 4	8	130			:
Hybrd	Zone	7612	MA_4Z_Ice 9 _ES	1 / 4	4	140			:
Hybrd	Zone	7613	MA_4Z_Ice 10	1 / 4	4	140			:
Hybrd	Zone	7614	MA_4Z_RndmBeat1	4 / 4	8	90			:
Hybrd	Zone	7615	MA_4Z_RndmBeat2	4 / 4	8	90			:
Hybrd	Zone	7616	MA_4Z_RndmBeat3	4 / 4	2	90			:
Hybrd	Zone	7617	MA_4Z_RndmBeat4	4 / 4	2	90			:
Hybrd	Zone	7618	MA_4Z_RndmBeat5	4 / 4	2	90			:
Hybrd	Zone	7619	MA_4Z_RndmBeat6	4 / 4	8	90			:
Hybrd	Zone	7620	MA_4Z_RndmBeat7	4 / 4	8	90			:
Hybrd	Zone	7621	MA_4Z_Bend	4 / 4	1	120			:
Hybrd	Zone	7622	MA_8Z_8ZoneArp 1A	4 / 4	1	56			:
Hybrd	Zone	7623	MA_8Z_8ZoneArp 1B	4 / 4	1	56			:
Hybrd	Zone	7624	MA_8Z_8ZoneArp 1C	4 / 4	1	56			:
Hybrd	Zone	7625	MA_8Z_8ZoneArp 1D	4 / 4	1	56			:
Hybrd	Zone	7626	MA_8Z_8ZoneArp 1E	4 / 4	1	56			:
Hybrd	Zone	7627	MA_8Z_8ZoneArpH 1A	4 / 4	2	112			:
Hybrd	Zone	7628	MA_8Z_8ZoneArpH 1B	4 / 4	2	112			:
Hybrd	Zone	7629	MA_8Z_8ZoneArpH 1C	4 / 4	2	112			:
Hybrd	Zone	7630	MA_8Z_8ZoneArpH 1D	4 / 4	2	112			:

Main Category	Sub Category	ARP No.	ARP Name	Time Signature	Length	Original Tempo	Accent	Random SFX	Voice Type
Hybrd	Zone	7631	MA_8Z_8ZoneArpH 1E	4 / 4	2	112			Syn Comp/Lead/Pad
Hybrd	Zone	7632	MA_8Z_8ZoneArp 2A	4 / 4	1	112			:
Hybrd	Zone	7633	MA_8Z_8ZoneArp 2B	4 / 4	1	112			:
Hybrd	Zone	7634	MA_8Z_8ZoneArp 2C	4 / 4	1	112			:
Hybrd	Zone	7635	MA_8Z_8ZoneArp 2D	4 / 4	1	112			:
Hybrd	Zone	7636	MA_8Z_8ZoneArp 2E	4 / 4	1	112			:
Hybrd	Zone	7637	MA_8Z_8ZoneArp 3A	4 / 4	1	140			:
Hybrd	Zone	7638	MA_8Z_8ZoneArp 3B	4 / 4	1	140			:
Hybrd	Zone	7639	MA_8Z_8ZoneArp 3C	4 / 4	1	140			:
Hybrd	Zone	7640	MA_8Z_8ZoneArp 3D	4 / 4	1	140			:
Hybrd	Zone	7641	MA_8Z_8ZoneArp 3E	4 / 4	1	140			:
Hybrd	Z.Pad	7642	MA_PadL_Pad SeqL1	4 / 4	2	108			:
Hybrd	Z.Pad	7643	MA_PadL_Pad SeqL2	4 / 4	2	104			:
Hybrd	Z.Pad	7644	MA_PadL_Pad SeqL3	4 / 4	2	104			:
Hybrd	Z.Pad	7645	MA_PadL_Pad SeqL4	4 / 4	2	104			:
Hybrd	Z.Pad	7646	MA_PadL_Pad SeqL5	4 / 4	1	108			:
Hybrd	Z.Pad	7647	MA_PadL_Pad SeqL6	4 / 4	2	90			:
Hybrd	Z.Pad	7648	MA_PadL_Pad SeqL7	4 / 4	2	90			:
Hybrd	Z.Pad	7649	MA_PadL_Pad SeqL8	4 / 4	1	90			:
Hybrd	Z.Pad	7650	MA_PadL_Pad SeqL9	4 / 4	1	90			:
Hybrd	Z.Pad	7651	MA_PadL_Pad SeqL10	4 / 4	1	145			:
Hybrd	Z.Pad	7652	MA_PadL_Pad SeqL11	4 / 4	1	130			:
Hybrd	Z.Pad	7653	MA_PadL_Pad SeqL12	4 / 4	2	130			:
Hybrd	Z.Pad	7654	MA_PadL_Pad SeqL13	4 / 4	1	90			:
Hybrd	Z.Pad	7655	MA_PadL_Pad SeqL14	4 / 4	1	90			:
Hybrd	Z.Pad	7656	MA_PadH_Pad Seq1	4 / 4	1	70			:
Hybrd	Z.Pad	7657	MA_PadH_Pad Seq2	4 / 4	1	70			:
Hybrd	Z.Pad	7658	MA_PadH_Pad Seq3	4 / 4	1	70			:
Hybrd	Z.Pad	7659	MA_PadH_Pad Seq4	4 / 4	1	90			:
Hybrd	Z.Pad	7660	MA_PadH_Pad Seq5	4 / 4	1	124			:
Hybrd	Z.Pad	7661	MA_PadH_Pad Seq6	4 / 4	1	56			:
Hybrd	Z.Pad	7662	MA_PadH_Pad Seq7	4 / 4	2	145			:
Hybrd	Z.Pad	7663	MA_PadH_Pad Seq8	4 / 4	2	145			:
Hybrd	Z.Pad	7664	MA_PadH_Pad Seq9	4 / 4	1	145			:
Hybrd	Z.Pad	7665	MA_PadH_Pad Seq10	4 / 4	2	145			:
Hybrd	Z.Pad	7666	MA_PadH_Pad Seq11	4 / 4	2	145			:
Hybrd	Z.Pad	7667	MA_PadH_Pad Seq12	4 / 4	2	145			:
Hybrd	Z.Pad	7668	MA_PadH_Pad Seq13	4 / 4	2	145			:
Hybrd	Z.Pad	7669	MA_PadH_Pad Seq14	4 / 4	1	145			:
Hybrd	Z.Pad	7670	MA_PadH_Pad Seq15	4 / 4	2	145			:
Hybrd	Z.Pad	7671	MA_PadH_Pad Seq16	4 / 4	2	145			:
Hybrd	Z.Pad	7672	MA_PadH_Pad Seq17	4 / 4	2	145			:
Hybrd	Z.Pad	7673	MA_PadH_Pad Seq18	4 / 4	1	145			:
Hybrd	Z.Pad	7674	MA_PadH_Pad Seq19	4 / 4	1	145			:
Cntr	Filtr	7675	Gate Cut1	4 / 4	4	120			(CC#10, 71, 74)
Cntr	Filtr	7676	Gate Cut2	4 / 4	1	120			(CC#74)
Cntr	Filtr	7677	Gate Cut3	4 / 4	8	120			(CC#71, 74)
Cntr	Filtr	7678	CC-Dive1	4 / 4	4	130			:
Cntr	Filtr	7679	CC-Dive2	4 / 4	2	130			:
Cntr	Filtr	7680	FilterWave1	4 / 4	4	105			:
Cntr	Filtr	7681	FilterWave2	4 / 4	4	105			:
Cntr	Filtr	7682	Filter 16	4 / 4	1	153			(CC#74)
Cntr	Filtr	7683	Filter 32	4 / 4	1	153			:
Cntr	Filtr	7684	Filter 3to3	4 / 4	2	153			:
Cntr	Filtr	7685	Filter3Delay	4 / 4	1	153			:
Cntr	Filtr	7686	Filter Fill1	4 / 4	1	153			:
Cntr	Filtr	7687	Filter Fill2	4 / 4	1	153			:
Cntr	Filtr	7688	Filter Fill3	4 / 4	1	153			:
Cntr	Filtr	7689	Filter Fill4	4 / 4	1	153			:
Cntr	Filtr	7690	MC_Hip Hop 2	4 / 4	2	94			(CC#71, 74)
Cntr	Filtr	7691	FB_Hip Hop 2	4 / 4	1	94			:
Cntr	Filtr	7692	IA_Trance 5 _ES	4 / 4	4	140			(CC#74)
Cntr	Filtr	7693	MA_Acid Breaks	4 / 4	1	98			(CC#10, 74)
Cntr	Filtr	7694	IA_Dream Dance	4 / 4	4	136			(CC#74)
Cntr	Filtr	7695	MC_Club House	4 / 4	2	128			(CC#71, 74)
Cntr	Filtr	7696	FA_Club House	4 / 4	1	128			(CC#71)
Cntr	Filtr	7697	MB_Garage 2	4 / 4	2	127			(CC#74)
Cntr	Filtr	7698	MC_Garage 2	4 / 4	2	127			:
Cntr	Filtr	7699	FA_Garage 2	4 / 4	1	127			:
Cntr	Filtr	7700	MA_Chill Out	4 / 4	2	79			:
Cntr	Filtr	7701	MD_Chill Out	4 / 4	2	79			(CC#11, 74)
Cntr	Filtr	7702	IA_Chill Out	4 / 4	4	79			(CC#74)
Cntr	Filtr	7703	FB_Chill Out	4 / 4	1	79			:
Cntr	Filtr	7704	MA_Ambient 3	4 / 4	2	75			(CC#71, 74)
Cntr	Filtr	7705	MA_Ambient 3 AF1	4 / 4	2	75			:
Cntr	Filtr	7706	MA_Ambient 3 AF2	4 / 4	2	75			:
Cntr	Filtr	7707	MB_Ambient 3	4 / 4	4	75			(CC#74)
Cntr	Filtr	7708	MB_Ambient 3 AF1	4 / 4	4	75			:
Cntr	Filtr	7709	MB_Ambient 3 AF2	4 / 4	4	75			:
Cntr	Filtr	7710	MC_Ambient 3	4 / 4	2	75			(CC#71, 74)
Cntr	Filtr	7711	MC_Ambient 3 AF1	4 / 4	2	75			:
Cntr	Filtr	7712	MC_Ambient 3 AF2	4 / 4	2	75			:
Cntr	Exprs	7713	GateL1	4 / 4	1	134			(CC#11)

Main Category	Sub Category	ARP No.	ARP Name	Time Signature	Length	Original Tempo	Accent	Random SFX	Voice Type
Cntr	Exprs	7714	GateL2	4 / 4	1	134			(CC#11)
Cntr	Exprs	7715	GateL3	4 / 4	1	134			:
Cntr	Exprs	7716	GateL4	4 / 4	1	134			:
Cntr	Exprs	7717	GateL5	4 / 4	1	134			:
Cntr	Exprs	7718	GateL6	4 / 4	1	134			:
Cntr	Exprs	7719	GateL7	4 / 4	1	134			:
Cntr	Exprs	7720	GateL8	4 / 4	1	134			:
Cntr	Exprs	7721	GateL9	4 / 4	1	134			:
Cntr	Exprs	7722	GateL10	4 / 4	1	134			:
Cntr	Exprs	7723	GateL11	4 / 4	1	134			:
Cntr	Exprs	7724	GateL12	4 / 4	1	134			:
Cntr	Exprs	7725	GateL13	4 / 4	1	134			:
Cntr	Exprs	7726	GateL14	4 / 4	1	134			:
Cntr	Exprs	7727	GateL15	4 / 4	1	134			:
Cntr	Exprs	7728	GateL16	4 / 4	1	134			:
Cntr	Exprs	7729	GateL17	4 / 4	1	134			:
Cntr	Exprs	7730	GateL18	4 / 4	1	134			:
Cntr	Exprs	7731	GateL19	4 / 4	1	134			:
Cntr	Exprs	7732	GateL20	4 / 4	1	134			:
Cntr	Exprs	7733	GateM1	4 / 4	1	134			:
Cntr	Exprs	7734	GateM2	4 / 4	1	134			:
Cntr	Exprs	7735	GateM3	4 / 4	1	134			:
Cntr	Exprs	7736	GateM4	4 / 4	1	134			:
Cntr	Exprs	7737	GateM5	4 / 4	1	134			:
Cntr	Exprs	7738	GateM6	4 / 4	1	134			:
Cntr	Exprs	7739	GateM7	4 / 4	1	134			:
Cntr	Exprs	7740	GateM8	4 / 4	1	134			:
Cntr	Exprs	7741	GateM9	4 / 4	1	134			:
Cntr	Exprs	7742	GateM10	4 / 4	1	134			:
Cntr	Exprs	7743	GateM11	4 / 4	1	134			:
Cntr	Exprs	7744	GateM12	4 / 4	1	134			:
Cntr	Exprs	7745	GateM13	4 / 4	1	134			:
Cntr	Exprs	7746	GateM14	4 / 4	1	134			:
Cntr	Exprs	7747	GateM15	4 / 4	1	134			:
Cntr	Exprs	7748	GateM16	4 / 4	1	134			:
Cntr	Exprs	7749	GateM17	4 / 4	1	134			:
Cntr	Exprs	7750	GateM18	4 / 4	1	134			:
Cntr	Exprs	7751	GateM19	4 / 4	1	134			:
Cntr	Exprs	7752	GateM20	4 / 4	1	134			:
Cntr	Exprs	7753	GateS1	4 / 4	1	134			:
Cntr	Exprs	7754	GateS2	4 / 4	1	134			:
Cntr	Exprs	7755	GateS3	4 / 4	1	134			:
Cntr	Exprs	7756	GateS4	4 / 4	1	134			:
Cntr	Exprs	7757	GateS5	4 / 4	1	134			:
Cntr	Exprs	7758	GateS6	4 / 4	1	134			:
Cntr	Exprs	7759	GateS7	4 / 4	1	134			:
Cntr	Exprs	7760	GateS8	4 / 4	1	134			:
Cntr	Exprs	7761	GateS9	4 / 4	1	134			:
Cntr	Exprs	7762	GateS10	4 / 4	1	134			:
Cntr	Exprs	7763	GateS11	4 / 4	1	134			:
Cntr	Exprs	7764	GateS12	4 / 4	1	134			:
Cntr	Exprs	7765	GateS13	4 / 4	1	134			:
Cntr	Exprs	7766	GateS14	4 / 4	1	134			:
Cntr	Exprs	7767	GateS15	4 / 4	1	134			:
Cntr	Exprs	7768	GateS16	4 / 4	1	134			:
Cntr	Exprs	7769	GateS17	4 / 4	1	134			:
Cntr	Exprs	7770	GateS18	4 / 4	1	134			:
Cntr	Exprs	7771	GateS19	4 / 4	1	134			:
Cntr	Exprs	7772	GateS20	4 / 4	1	134			:
Cntr	Exprs	7773	LevSawDown	4 / 4	1	90			:
Cntr	Exprs	7774	SlicePhrase1	4 / 4	1	153			:
Cntr	Exprs	7775	SlicePhrase2	4 / 4	1	153			:
Cntr	Exprs	7776	SlicePhrase3	4 / 4	1	153			:
Cntr	Exprs	7777	SlicePhrase4	4 / 4	1	153			:
Cntr	Exprs	7778	SlicePhrase5	4 / 4	4	153			:
Cntr	Exprs	7779	SlicePhrase6	4 / 4	4	153			:
Cntr	Exprs	7780	SlicePhrase7	4 / 4	4	153			:
Cntr	Exprs	7781	SlicePhrase8	4 / 4	4	153			:
Cntr	Exprs	7782	Slice 16	4 / 4	1	153			:
Cntr	Exprs	7783	Slice 32	4 / 4	1	155			:
Cntr	Exprs	7784	Slice to3	4 / 4	1	153			:
Cntr	Exprs	7785	Slice 3Delay	4 / 4	1	153			:
Cntr	Exprs	7786	Slice Fill1	4 / 4	1	153			:
Cntr	Exprs	7787	Slice Fill2	4 / 4	2	153			:
Cntr	Exprs	7788	Slice Fill3	4 / 4	2	153			:
Cntr	Exprs	7789	Slice Fill4	4 / 4	2	153			:
Cntr	Exprs	7790	MA_Dream Trance	4 / 4	1	140			:
Cntr	Exprs	7791	MA_Dream Trance AF1	4 / 4	1	140			:
Cntr	Exprs	7792	MB_Dream Trance	4 / 4	1	140			:
Cntr	Exprs	7793	MB_Dream Trance AF2	4 / 4	1	140			:
Cntr	Pan	7794	Pan Efx4CRL	4 / 4	1	153			(CC#10)
Cntr	Pan	7795	Pan Efx4LCR	4 / 4	1	153			:
Cntr	Pan	7796	Pan Efx4RLC	4 / 4	1	153			:

Main Category	Sub Category	ARP No.	ARP Name	Time Signature	Length	Original Tempo	Accent	Random SFX	Voice Type
Cntr	Pan	7797	Pan Efx8+LR	4 / 4	1	153			(CC#10)
Cntr	Pan	7798	Pan Efx16CRL	4 / 4	1	153			:
Cntr	Pan	7799	Pan Efx16RL	4 / 4	1	153			:
Cntr	Pan	7800	Pan Ef16RL>C	4 / 4	1	153			:
Cntr	Pan	7801	Pan 16RL>WRL	4 / 4	2	153			:
Cntr	Pan	7802	MB_Hip Hop 2	4 / 4	2	94			:
Cntr	Pan	7803	MB_New Gospel	4 / 4	2	90			(CC#10, 11)
Cntr	Pan	7804	MC_New Gospel	4 / 4	2	90			:
Cntr	Pan	7805	IA_New Gospel	4 / 4	1	90			:
Cntr	Pan	7806	IA_Club House	4 / 4	2	128			(CC#10)
Cntr	Mod	7807	Mod Control	4 / 4	4	64			(CC#1)
Cntr	Mod	7808	Mod ControlU	4 / 4	4	90			:
Cntr	Pbend	7809	Bend Vibrato	4 / 4	4	120			(PB, PB Range=12)
Cntr	Pbend	7810	BottleDwVib	4 / 4	4	120			:
Cntr	Pbend	7811	BottleUpVib	4 / 4	4	120			:
Cntr	Pbend	7812	HammerVib	4 / 4	4	120			:
Cntr	Pbend	7813	PullingVib1	4 / 4	4	120			:
Cntr	Pbend	7814	PullingVib2	4 / 4	4	120			:
Cntr	Pbend	7815	SlideVibrato	4 / 4	4	120			:
Cntr	Pbend	7816	U/D ChoknVib	4 / 4	4	120			:
Cntr	Pbend	7817	Trill 4	4 / 4	4	120			:
Cntr	Pbend	7818	Trill 5	4 / 4	4	120			:
Cntr	Pbend	7819	Vibrato1	4 / 4	4	120			:
Cntr	Pbend	7820	Vibrato2	4 / 4	4	120			:
Cntr	Pbend	7821	Choking Vib	4 / 4	4	120			:
Cntr	Pbend	7822	Arm Down	4 / 4	4	120			:
Cntr	Pbend	7823	ThrobFx	4 / 4	4	100			(PB, PB Range=24)
Cntr	Pbend	7824	PitchEffect1	4 / 4	1	153			:
Cntr	Pbend	7825	PitchEffect2	4 / 4	1	153			:
Cntr	Pbend	7826	PitchEffect3	4 / 4	1	153			:
Cntr	Pbend	7827	PitchEffect4	4 / 4	1	153			:
Cntr	Pbend	7828	PitchEffect5	4 / 4	1	153			(PB, PB Range=12)
Cntr	Pbend	7829	PitchEffect6	4 / 4	1	153			(PB, PB Range=24)
Cntr	Pbend	7830	PitchEffect7	4 / 4	1	153			:
Cntr	Pbend	7831	PitchEffect8	4 / 4	2	153			:
Cntr	Asign	7832	AS1Env1	4 / 4	1	90			(CC#16)
Cntr	Asign	7833	AS1Env2	4 / 4	1	90			:
Cntr	Asign	7834	AS1Env3	4 / 4	1	90			:
Cntr	Asign	7835	AS1Env4	4 / 4	1	90			:
Cntr	Asign	7836	AS1Env5	4 / 4	1	90			:
Cntr	Asign	7837	AS1Env6	4 / 4	1	90			:
Cntr	Asign	7838	AS1Env7	4 / 4	1	90			:
Cntr	Asign	7839	AS1Env8	4 / 4	1	90			:
Cntr	Asign	7840	AS1Tri+1	4 / 4	1	150			:
Cntr	Asign	7841	AS1Tri-1	4 / 4	1	90			:
Cntr	Asign	7842	AS1TriF1	4 / 4	1	90			:
Cntr	Asign	7843	AS1Tri+4	4 / 4	1	90			:
Cntr	Asign	7844	AS1Tri-4	4 / 4	4	90			:
Cntr	Asign	7845	AS1TriF4	4 / 4	4	90			:
Cntr	Asign	7846	AS1Tri+8	4 / 4	8	90			:
Cntr	Asign	7847	AS1Tri-8	4 / 4	8	90			:
Cntr	Asign	7848	AS1TriF8	4 / 4	8	90			:
Cntr	Asign	7849	AS1Up+1	4 / 4	1	90			:
Cntr	Asign	7850	AS1Dw+1	4 / 4	1	90			:
Cntr	Asign	7851	AS1SawDw	4 / 4	1	90			:
Cntr	Asign	7852	AS2Env1	4 / 4	1	90			(CC#17)
Cntr	Asign	7853	AS2Env2	4 / 4	1	90			:
Cntr	Asign	7854	AS2Env3	4 / 4	1	90			:
Cntr	Asign	7855	AS2Env4	4 / 4	1	90			:
Cntr	Asign	7856	AS2Env5	4 / 4	1	90			:
Cntr	Asign	7857	AS2Env6	4 / 4	1	90			:
Cntr	Asign	7858	AS2Env7	4 / 4	1	90			:
Cntr	Asign	7859	AS2Env8	4 / 4	1	90			:
Cntr	Asign	7860	AS2Tri+1	4 / 4	1	90			:
Cntr	Asign	7861	AS2Tri-1	4 / 4	1	90			:
Cntr	Asign	7862	AS2TriF1	4 / 4	1	90			:
Cntr	Asign	7863	AS2Tri+4	4 / 4	1	90			:
Cntr	Asign	7864	AS2Tri-4	4 / 4	4	90			:
Cntr	Asign	7865	AS2TriF4	4 / 4	4	90			:
Cntr	Asign	7866	AS2Tri+8	4 / 4	1	90			:
Cntr	Asign	7867	AS2Tri-8	4 / 4	8	90			:
Cntr	Asign	7868	AS2TriF8	4 / 4	8	90			:
Cntr	Asign	7869	AS2Up+1	4 / 4	1	90			:
Cntr	Asign	7870	AS2Dw+1	4 / 4	1	90			:
Cntr	Asign	7871	AS2SawDw	4 / 4	1	90			:
Cntr	Asign	7872	MA_Acid Breaks	4 / 4	1	98			:
Cntr	Asign	7873	MB_Acid Breaks	4 / 4	4	98			(CC#10, 17, 74)
Cntr	Genrl	7874	Mute 4/4	4 / 4	1	120			(no event)
Cntr	Genrl	7875	Mute 2/4	2 / 4	1	120			:
Cntr	Genrl	7876	Mute 3/4	3 / 4	1	120			:
Cntr	Genrl	7877	Mute 5/4	5 / 4	1	120			:
Cntr	Genrl	7878	Mute 6/4	6 / 4	1	120			:
Cntr	Genrl	7879	Mute 6/8	6 / 8	1	120			:
Cntr	Genrl	7880	Mute 3/8	3 / 8	1	120			(no event)
Cntr	Genrl	7881	Mute 9/8	9 / 8	1	120			:

(*contents provided by Keyfax New Media — www.keyfax.com)

Effect Type List

* OS V1.50 or later

Category	Category (Display)	Effect Type Name	Type (HEX)		MOTIF XF					
			MSB	LSB	Rev	Cho	InsA	InsB	InsL	Mas
	—	NO EFFECT	00	00	O	O				
	—	THRU	00	00			O	O	O	
REVERB										
	REV	REV-X HALL	01	00	O					
	REV	R3 HALL	01	01	O					
	REV	SPX HALL	01	02	O	O	O	O		
	REV	HD HALL*	01	03	O					
	REV	REV-X ROOM	01	10	O					
	REV	R3 ROOM	01	11	O					
	REV	SPX ROOM	01	12	O	O	O	O		
	REV	HD ROOM*	01	13	O					
	REV	R3 PLATE	01	20	O					
	REV	HD PLATE*	01	21	O					
	REV	SPX STAGE	01	30	O	O	O	O		
	REV	SPACE SIMULATOR	01	40	O					
DELAY										
	DLY	CROSS DELAY	02	00		O	O	O		
	DLY	TEMPO CROSS DELAY	02	10		O	O	O		
	DLY	TEMPO DELAY MONO	02	20		O	O	O		
	DLY	TEMPO DELAY STEREO	02	28		O	O	O		
	DLY	CONTROL DELAY	02	30			O	O		
	DLY	DELAY LR	02	40		O	O	O		
	DLY	DELAY LCR	02	50		O	O	O		
	DLY	DELAY LR (Stereo)	02	48		O	O	O		O
CHORUS										
	CHO	G CHORUS	03	00		O	O	O		
	CHO	2 MODULATOR	03	10		O	O	O		
	CHO	SPX CHORUS	03	20		O	O	O		
	CHO	SYMPHONIC	03	30		O	O	O		
	CHO	ENSEMBLE DETUNE	03	40		O	O	O		
FLANGER										
	FLG	VCM FLANGER	04	00		O	O	O		
	FLG	CLASSIC FLANGER	04	10		O	O	O		
	FLG	TEMPO FLANGER	04	20		O	O	O		
	FLG	DYNAMIC FLANGER	04	30			O	O		
PHASER										
	PHA	VCM PHASER MONO	05	00		O	O	O		
	PHA	VCM PHASER STEREO	05	10		O	O	O		
	PHA	TEMPO PHASER	05	20		O	O	O		
	PHA	DYNAMIC PHASER	05	30			O	O		
TOREMOLO&ROTARY										
	T&R	AUTO PAN	06	00			O	O		
	T&R	TREMOLO	06	10			O	O		
	T&R	ROTARY SPEAKER	06	20			O	O		
DISTORTION										
	DST	AMP SIMULATOR 1	07	00			O	O		
	DST	AMP SIMULATOR 2	07	10			O	O		
	DST	COMP DISTORTION	07	20			O	O		
	DST	COMP DISTORTION DELAY	07	30			O	O		O
GUITAR EFX*										
	GTE	US COMBO*	07	40			O	O		
	GTE	JAZZ COMBO*	07	41			O	O		
	GTE	US HIGH GAIN*	07	42			O	O		
	GTE	BRITISH LEAD*	07	43			O	O		
	GTE	MULTI FX*	07	44			O	O		
	GTE	SMALL STEREO*	07	45			O	O		
	GTE	BRITISH COMBO*	07	46			O	O		
	GTE	BRITISH LEGEND*	07	47			O	O		
COMPRESSOR										
	CMP	VCM COMPRESSOR 376	08	00			O	O		O
	CMP	CLASSIC COMPRESSOR	08	10			O	O		
	CMP	MULTI BAND COMP	08	20			O	O		O
WAH										
	WAH	VCM AUTO WAH	0A	00			O	O		
	WAH	VCM TOUCH WAH	0A	10			O	O		
	WAH	VCM PEDAL WAH	0A	20			O	O		
LO-FI										
	L-F	LO-FI	0B	00			O	O		O
	L-F	NOISY	0B	10			O	O		
	L-F	DIGITAL TURNTABLE	0B	20			O	O		
TECH										
	TEC	RING MODULATOR	0C	00			O	O		O
	TEC	DYNAMIC RING MODULATOR	0C	10			O	O		
	TEC	DYNAMIC FILTER	0C	20			O	O		O
	TEC	AUTO SYNTH	0C	30			O	O		
	TEC	ISOLATOR	0C	40			O	O		O
	TEC	SLICE	0C	50			O	O		O
	TEC	TECH MODULATION	0C	60			O	O		

Category	Category (Displey)	Effect Type Name	Type (HEX)		MOTIF XF					
			MSB	LSB	Rev	Cho	InsA	InsB	InsL	Mas
MISC										
	MSC	VCM EQ 501	0D	00			O	O		
	MSC	HARMONIC ENHANCER	0D	10			O	O		
	MSC	TALKING MODULATOR	0D	20			O	O		
	MSC	DAMPER RESONANCE	0D	30			O	O		
	MSC	PITCH CHANGE	0D	40			O	O		
	MSC	EARLY REFLECTION	0D	50		O	O	O		
	MSC	VOCODER	0D	60					O	

Effect Parameter List

* OS V1.50 or later

Reverb Block

[0] No Effect

When this type is selected, no parameters are available.

[1] REV-X HALL
[4] REV-X ROOM

No.	Parameter	Range	Value	Table No.
1	Reverb Time	0.3s – 18.0s (HALL)/ 10.0s (ROOM)	(0 – 69)	25/26
2	Diffusion	0 – 10	(0 – 10)	
3	Initial Delay	0.1ms – 200.0ms	(0 – 127)	5
4	HPF Cutoff Frequency	20Hz – 8.0kHz	(0 – 52)	3
5	LPF Cutoff Frequency	1.0kHz – 20.0kHz	(34 – 60)	3
6	Room Size	0 – 31	(0 – 31)	
7	High Ratio	0.1 – 1.0	(1 – 10)	
8	Low Ratio	0.1 – 1.4	(1 – 14)	
9	Decay	0 – 63	(0 – 63)	
10	—			
11	—			
12	—			
13	—			
14	—			
15	—			
16	—			

REV-X HALL: (Table No.25)
REV-X ROOM: (Table No.26)
For details, refer to the Effect Data Assign Table.

[2] R3 HALL
[3] SPX HALL
[5] R3 ROOM
[6] SPX ROOM
[7] R3 PLATE
[8] SPX STAGE

No.	Parameter	Range	Value	Table No.
1	Reverb Time	0.3s – 30.0s	(0 – 69)	4
2	Diffusion	0 – 10	(0 – 10)	
3	Initial Delay	0.1ms – 200.0ms	(0 – 127)	5
4	HPF Cutoff Frequency	20Hz – 8.0kHz	(0 – 52)	3
5	LPF Cutoff Frequency	1.0kHz – 20.0kHz	(34 – 60)	3
6	—			
7	—			
8	—			
9	—			
10	—			
11	Reverb Delay	0.1ms – 200.0ms	(0 – 127)	5
12	Density	0 – 4	(0 – 4)	
13	ER/Rev Balance	E63>R – E=R – E<R63	(1 – 127)	
14	Feedback High Damp	0.1 – 1.0	(1 – 10)	
15	Feedback Level	-63 – +63	(1 – 127)	
16	—			

[9] SPACE SIMULATOR

No.	Parameter	Range	Value	Table No.
1	Reverb Time	0.3s – 30.0s	(0 – 69)	4
2	Diffusion	0 – 10	(0 – 10)	
3	Initial Delay	0.1ms – 200.0ms	(0 – 127)	5
4	HPF Cutoff Frequency	20Hz – 8.0kHz	(0 – 52)	3
5	LPF Cutoff Frequency	1.0kHz – 20.0kHz	(34 – 60)	3
6	Width	0.5m – 30.2m	(0 – 104)	11
7	Height	0.5m – 30.2m	(0 – 104)	11
8	Depth	0.5m – 30.2m	(0 – 104)	11
9	Wall Vary	0 – 30	(0 – 30)	
10	—			
11	Reverb Delay	0.1ms – 200.0ms	(0 – 127)	5
12	Density	0 – 4	(0 – 4)	
13	ER/Rev Balance	E63>R – E=R – E<R63	(1 – 127)	
14	Feedback High Damp	0.1 – 1.0	(1 – 10)	
15	Feedback Level	-63 – +63	(1 – 127)	
16	Space Type	0 – 1	(0 – 1)	

[10] HD HALL*
[11] HD ROOM*

No.	Parameter	Range	Value	Table No
1	Reverb Time	0.3s – 30.0s	(0 – 69)	4
2	Room Size	0 – 4	(0 – 4)	
3	Initial Delay	0.1ms – 200.0ms	(0 – 127)	5
4	High Damp Frequency	1.0kHz – 20.0kHz	(34 – 60)	3
5	—			
6	High Ratio	0.0 – 1.0	(0 – 10)	
7	—			
8	—			
9	—			
10	—			
11	—			
12	—			
13	EQ Low Frequency	22Hz – 1.0kHz	(1 – 34)	3
14	EQ Low Gain	-12dB – 0dB – +12dB	(52 – 76)	
15	EQ High Frequency	500Hz – 18.0kHz	(28 – 59)	3
16	EQ High Gain	-12dB – 0dB – +12dB	(52 – 76)	

[12] HD PLATE*

No.	Parameter	Range	Value	Table No
1	Reverb Time	0.3s – 30.0s	(0 – 69)	4
2	Plate Type	0 – 2	(0 – 2)	
3	Initial Delay	0.1ms – 200.0ms	(0 – 127)	5
4	High Damp Frequency	1.0kHz – 20.0kHz	(34 – 60)	3
5	—			
6	High Ratio	0.0 – 1.0	(0 – 10)	
7	—			
8	—			
9	—			
10	—			
11	—			
12	—			
13	EQ Low Frequency	22Hz – 1.0kHz	(1 – 34)	3
14	EQ Low Gain	-12dB – 0dB – +12dB	(52 – 76)	
15	EQ High Frequency	500Hz – 18.0kHz	(28 – 59)	3
16	EQ High Gain	-12dB – 0dB – +12dB	(52 – 76)	

Chorus, Insertion Block

[0] THRU/No Effect

When this type is selected, no parameters are available.

Category — REVERB

[1] SPX HALL
[2] SPX ROOM
[3] SPX STAGE

No.	Parameter	Range	Value	Table No.
1	Reverb Time	0.3s – 30.0s	(0 – 69)	4
2	Diffusion	0 – 10	(0 – 10)	
3	Initial Delay	0.1ms – 99.3ms	(0 – 63)	5
4	HPF Cutoff Frequency	20Hz – 8.0kHz	(0 – 52)	3
5	LPF Cutoff Frequency	1.0kHz – 20.0kHz	(34 – 60)	3
6	—			
7	—			
8	—			
9	—			
10	Dry/Wet Balance	D63>W – D=W – D<W63	(1 – 127)	
11	Reverb Delay	0.1ms – 99.3ms	(0 – 63)	5
12	Density	0 – 4	(0 – 4)	
13	ER/Rev Balance	E63>R – E=R – E<R63	(1 – 127)	
14	Feedback High Damp	0.1 – 1.0	(1 – 10)	
15	Feedback Level	-63 – +63	(1 – 127)	
16	—			

Category — DELAY

[1] CROSS DELAY

No.	Parameter	Range	Value	Table No.
1	Delay Time L>R	0.1ms – 1638.3ms	(1 – 16383)	
2	Delay Time R>L	0.1ms – 1638.3ms	(1 – 16383)	
3	Feedback Level	-63 – +63	(1 – 127)	
4	Input Select	L, R, L&R	(0 – 2)	
5	Feedback High Damp	0.1 – 1.0	(1 – 10)	
6	—			
7	—			
8	—			
9	—			
10	Dry/Wet Balance	D63>W – D=W – D<W63	(1 – 127)	
11	—			
12	—			
13	EQ Low Frequency	32Hz – 2.0kHz	(4 – 40)	3
14	EQ Low Gain	-12dB – +12dB	(52 – 76)	
15	EQ High Frequency	500Hz – 16.0kHz	(28 – 58)	3
16	EQ High Gain	-12dB – +12dB	(52 – 76)	

[2] TEMPO CROSS DELAY

No.	Parameter	Range	Value	Table No.
1	Delay Time L>R	32nd/3 – 4thx6	(0 – 19)	14
2	Delay Time R>L	32nd/3 – 4thx6	(0 – 19)	14
3	Feedback Level	-63 – +63	(1 – 127)	
4	Input Select	L, R, L&R	(0 – 2)	
5	Feedback High Dump	0.1 – 1.0	(1 – 10)	
6	Lag	-63ms – +63ms	(1 – 127)	
7	—			
8	—			
9	—			
10	Dry/Wet Balance	D63>W – D=W – D<W63	(1 – 127)	
11	—			
12	—			
13 – 16: Same as the parameters shaded in gray in CROSS DELAY above.				

[3] TEMPO DELAY MONO

No.	Parameter	Range	Value	Table No.
1	Delay Time	32nd/3 – 4thx6	(0 – 19)	14
2	Feedback Level	-63 – +63	(1 – 127)	
3	Feedback High Dump	0.1 – 1.0	(1 – 10)	
4	L/R Diffusion	-63ms – +63ms	(1 – 127)	
5	Lag	-63ms – +63ms	(1 – 127)	
6	—			
7	—			
8	—			
9	—			
10	Dry/Wet Balance	D63>W – D=W – D<W63	(1 – 127)	
11	—			
12	—			
13 – 16: Same as the parameters shaded in gray in CROSS DELAY above.				

[4] TEMPO DELAY STEREO

No.	Parameter	Range	Value	Table No.
1	Delay Time	32nd/3 – 4thx6	(0 – 19)	14
2	Feedback Level	-63 – +63	(1 – 127)	
3	Feedback High Dump	0.1 – 1.0	(1 – 10)	
4	L/R Diffusion	-63ms – +63ms	(1 – 127)	
5	Lag	-63ms – +63ms	(1 – 127)	
6	—			
7	—			
8	—			
9	—			
10	Dry/Wet Balance	D63>W – D=W – D<W63	(1 – 127)	
11	—			
12	—			
13 – 16: Same as the parameters shaded in gray in CROSS DELAY on above.				

[5] CONTROL DELAY

No.	Parameter	Range	Value	Table No.
1	Delay Time	0.1ms – 1486.0ms	(1 – 14860)	
2	Delay transition rate	1 – 48	(1 – 48)	
3	Feedback Level	-63 – +63	(1 – 127)	
4	Feedback High Damp	0.1 – 1.0	(1 – 10)	
5	—			
6 – 9: Same as the parameters shaded in gray in CROSS DELAY on above.				
10	Dry/Wet Balance	D63>W – D=W – D<W63	(1 – 127)	
11	Control Type	normal, scratch	(0 – 1)	
12	—			
13	—			
14	—			
15	—			
16	—			

[6] DELAY L, R

No.	Parameter	Range	Value	Table No.
1	Delay Time L	0.1ms – 1638.3ms	(1 – 16383)	
2	Delay Time R	0.1ms – 1638.3ms	(1 – 16383)	
3	Feedback Time 1	0.1ms – 1638.3ms	(1 – 16383)	
4	Feedback Time 2	0.1ms – 1638.3ms	(1 – 16383)	
5	Feedback Level	-63 – +63	(1 – 127)	
6	Feedback High Damp	0.1 – 1.0	(1 – 10)	
7	—			
8	—			
9	—			
10	Dry/Wet Balance	D63>W – D=W – D<W63	(1 – 127)	
11	—			
12	—			
13 – 16: Same as the parameters shaded in gray in CROSS DELAY on above.				

[7] DELAY L, C, R

No.	Parameter	Range	Value	Table No.
1	Delay Time L	0.1ms_1638.3ms	(1 – 16383)	
2	Delay Time R	0.1ms_1638.3ms	(1 – 16383)	
3	Delay Time C	0.1ms_1638.3ms	(1 – 16383)	
4	Feedback Time	0.1ms_1638.3ms	(1 – 16383)	
5	Feedback Level	-63_+63	(1 – 127)	
6	Delay Level C	0_127	(0 – 127)	
7	Feedback High Damp	0.1_1.0	(1 – 10)	
8	—			
9	—			
10	Dry/Wet Balance	D63>W _ D=W _ D<W63	(1 – 127)	
11	—			
12	—			
13 – 16: Same as the parameters shaded in gray in CROSS DELAY on above.				

[8] DELAY L, R (STEREO)

No.	Parameter	Range	Value	Table No.
1	Delay Time L	0.1ms – 1638.3ms	(1 – 16383)	
2	Delay Time R	0.1ms – 1638.3ms	(1 – 16383)	
3	Feedback Time L	0.1ms – 1638.3ms	(1 – 16383)	
4	Feedback Time R	0.1ms – 1638.3ms	(1 – 16383)	
5	Feedback Level	-63 – +63	(1 – 127)	
6	Feedback High Damp	0.1 – 1.0	(1 – 10)	
7	—			
8	—			
9	—			
10	Dry/Wet Balance	D63>W – D=W – D<W63	(1 – 127)	
11	—			
15	—			
13 – 16: Same as the parameters shaded in gray in CROSS DELAY on above.				

Category — CHORUS

[1] G CHORUS

No.	Parameter	Range	Value	Table No.
1	LFO Speed	0.0Hz – 39.70Hz	(0 – 127)	1
2	—			
3	PM Depth	0 – 127	(0 – 127)	
4	Feedback Level	-63 – +63	(1 – 127)	
5	Delay Offset	0.0ms – 50.0ms	(0 – 127)	2
6 – 9: Same as the parameters shaded in gray in CROSS DELAY on above.				
10	Dry / Wet Balance	D63>W – D=W – D<W63	(1 – 127)	
11	EQ Mid Frequency	100Hz – 10.0kHz	(14 – 54)	3
12	EQ Mid Gain	-12dB – +12dB	(52 – 76)	
13	EQ Mid Width	0.1 – 12.0	(1 – 120)	
14	—			
15	Input Mode	mono, stereo	(0 – 1)	
16	—			

[2] 2 MODULATOR

No.	Parameter	Range	Value	Table No.
1	LFO Speed	0.0Hz – 39.70Hz	(0 – 127)	1
2	AM Depth	0 – 127	(0 – 127)	
3	PM Depth	0 – 127	(0 – 127)	
4	Feedback Level	-63 – +63	(1 – 127)	
5	Delay Offset	0.0ms – 50.0ms	(0 – 127)	2
6 – 9: Same as the parameters shaded in gray in CROSS DELAY on page 96.				
10	Dry / Wet Balance	D63>W – D=W – D<W63	(1 – 127)	
11	EQ Mid Frequency	100Hz – 10.0kHz	(14 – 54)	3
12	EQ Mid Gain	-12dB – +12dB	(52 – 76)	
13	EQ Mid Width	0.1 – 12.0	(1 – 120)	
14	—			
15	Input Mode	mono, stereo	(0 – 1)	
16	—			

[3] SPX CHORUS

No.	Parameter	Range	Value	Table No.
1	LFO Speed	0.0Hz – 39.70Hz	(0 – 127)	1
2	LFO Depth	0 – 127	(0 – 127)	
3	Feedback Level	-63 – +63	(1 – 127)	
4	Delay Offset	0.0ms – 50.0ms	(0 – 127)	2
5	—			
6 – 9: Same as the parameters shaded in gray in CROSS DELAY on page 96.				
10	Dry/Wet Balance	D63>W – D=W – D<W63	(1 – 127)	
11	EQ Mid Frequency	100Hz – 10.0kHz	(14 – 54)	3
12	EQ Mid Gain	-12dB – +12dB	(52 – 76)	
13	EQ Mid Width	0.1 – 12.0	(1 – 120)	
14	—			
15	Input Mode	mono, stereo	(0 – 1)	
16	—			

[4] SYMPHONIC

No.	Parameter	Range	Value	Table No.
1	LFO Speed	0.0Hz – 39.70Hz	(0 – 127)	1
2	LFO Depth	0 – 127	(0 – 127)	
3	Delay Offset	0.0ms – 50.0ms	(0 – 127)	2
4	—			
5	—			
6 – 9: Same as the parameters shaded in gray in CROSS DELAY on page 96.				
10	Dry/Wet Balance	D63>W – D=W – D<W63	(1 – 127)	
11	EQ Mid Frequency	100Hz – 10.0kHz	(14 – 54)	3
12	EQ Mid Gain	-12dB – +12dB	(52 – 76)	
13	EQ Mid Width	0.1 – 12.0	(1 – 120)	
14	—			
15	—			
16	—			

[5] ENSEMBLE DETUNE

No.	Parameter	Range	Value	Table No.
1	Detune	-50cent – +50cent	(14 – 114)	
2	Initial Delay Lch	0.0ms – 50.0ms	(0 – 127)	2
3	Initial Delay Rch	0.0ms – 50.0ms	(0 – 127)	2
4	Spread	0 – 63	(0 – 63)	
5	—			
6	—			
7	—			
8	—			
9	—			
10	Dry/Wet Balance	D63>W – D=W – D<W63	(1 – 127)	
11 – 14: Same as the parameters shaded in gray in CROSS DELAY on page 96.				
15	—			
16	—			

Category — FLANGER

[1] VCM FLANGER

No.	Parameter	Range	Value	Table No.
1	Speed	0.040Hz – 10.00Hz	(0 – 235)	22
2	Manual	0 – 127	(0 – 127)	
3	Depth	0 – 127	(0 – 127)	
4	Feedback	0 – 127	(0 – 127)	
5	Type	1 – 3	(0 – 2)	
6	Spread	0 – 127	(0 – 127)	
7	Mix	0 – 127	(0 – 127)	
8	—			
9	—			
10	—			
11	—			
12	—			
13	—			
14	—			
15	—			
16	—			

[2] CLASSIC FLANGER

No.	Parameter	Range	Value	Table No.
1	LFO Speed	0.0Hz – 39.70Hz	(0 – 127)	1
2	LFO Depth	0 – 127	(0 – 127)	
3	LFO Wave	Triangle, Sine, Random	(0 – 2)	
4	Delay Offset	0.09 – 36.21ms	(0 – 139)	20
5	Feedback Level	-100 – +100%	(0 – 200)	
6 – 9: Same as the parameters shaded in gray in CROSS DELAY on page 96.				
10	Dry/Wet Balance	D63>W – D=W – D<W63	(1 – 127)	
11	EQ Mid Frequency	100Hz – 10.0kHz	(14 – 54)	3
12	EQ Mid Gain	-12dB – +12dB	(52 – 76)	
13	EQ Mid Width	0.1 – 12.0	(1 – 120)	
14	Modulation Phase	-180 – +180	(0 – 16)	21
15	Feedback High Damp	0.1 – 1.0	(1 – 10)	
16	Analog Feel	0 – 10	(0 – 10)	

[3] TEMPO FLANGER

No.	Parameter	Range	Value	Table No.
1	LFO Speed	16th – 4thx16	(5 – 29)	14
2	LFO Depth	0 – 127	(0 – 127)	
3	Feedback Level	-63 – +63	(1 – 127)	
4	Delay Offset	0.0ms – 50.0ms	(0 – 127)	2
5	LFO Phase Reset	off (free run), Key On Reset, SEQ Start Reset	(0 – 2)	
6 – 9: Same as the parameters shaded in gray in CROSS DELAY on page 96.				
10	Dry/Wet Balance	D63>W – D=W – D<W63	(1 – 127)	
11	EQ Mid Frequency	100Hz – 10.0kHz	(14 – 54)	3
12	EQ Mid Gain	-12dB – +12dB	(52 – 76)	
13	EQ Mid Width	0.1 – 12.0	(1 – 120)	
14	LFO Phase Difference	-180deg – +180deg	(4 – 124)	
15	—			
16	—			

[4] DYNAMIC FLANGER

No.	Parameter	Range	Value	Table No.
1	Sensitivity	0 – 127	(0 – 127)	
2	Delay Offset	0 – 127	(0 – 127)	
3	Feedback Level	-63 – +63	(1 – 127)	
4	Attack Time	0.3ms – 227ms	(0 – 127)	17
5	Release Time	2.6ms – 2171ms	(0 – 127)	18
6	Release Curve	0 – 127	(0 – 127)	
7	Direction	up, down	(0 – 1)	
8	Dyna Threshold Level	0 – 127	(0 – 127)	
9	Dyna Level Offset	0 – 127	(0 – 127)	
10	Dry/Wet Balance	D63>W – D=W – D<W63	(1 – 127)	
11	—			
12	—			
13 – 16: Same as the parameters shaded in gray in CROSS DELAY on page 96.				

Category — PHASER

[1] VCM PHASER MONO

No.	Parameter	Range	Value	Table No.
1	Speed	0.100Hz – 10.00Hz	(0 – 252)	23
2	Manual	0 – 127	(0 – 127)	
3	Depth	0 – 127	(0 – 127)	
4	Feedback	0 – 127	(0 – 127)	
5	Stage	4, 6, 8, 10, 12, 16	(0 – 5)	
6	Mode	1, 2, 3	(0 – 2)	
7	Color	0 – 127	(0 – 127)	
8	—			
9	—			
10	—			
11	—			
12	—			
13	—			
14	—			
15	—			
16	—			

The Color parameter is not available in the following conditions: When Mode is set to 1 and Stage is set to 4, 6, 8. 12 or 16; or when Mode is set to 2 and Stage is set to 4 or 10.

[2] VCM PHASER STEREO

No.	Parameter	Range	Value	Table No.
1	Speed	0.100Hz – 10.00Hz	(0 – 252)	23
2	Manual	0 – 127	(0 – 127)	
3	Depth	0 – 127	(0 – 127)	
4	Feedback	0 – 127	(0 – 127)	
5	Stage	4, 6, 8, 10	(0 – 3)	
6	Mode	1, 2	(0 – 1)	
7	Color	0 – 127	(0 – 127)	
8	Spread	0 – 127	(0 – 127)	
9	—			
10	—			
11	—			
12	—			
13	—			
14	—			
15	—			
16	—			

The Color parameter is not available in the following conditions: When Mode is set to 1 and Stage is set to 4, 6, or 8; or when Mode is set to 2 and Stage is set to 4 or 10.

[3] TEMPO PHASER

No.	Parameter	Range	Value	Table No.
1	LFO Speed	16th – 4thx16	(5 – 29)	14
2	LFO Depth	0 – 127	(0 – 127)	
3	Phase Shift Offset	0 – 127	(0 – 127)	
4	Feedback Level	-63 – +63	(1 – 127)	
5	LFO Phase Reset	off (free run), Key On Reset, SEQ Start Reset	(0 – 2)	
6 – 9: Same as the parameters shaded in gray in CROSS DELAY on page 96.				
10	Dry/Wet Balance	D63>W – D=W – D<W63	(1 – 127)	
11	Stage	4 – 22	(4 – 22)	
12	Diffusion	mono, stereo	(0 – 1)	
13	—			
14	—			
15	—			
16	—			

[4] DYNAMIC PHASER

No.	Parameter	Range	Value	Table No.
1	Sensitivity	0 – 127	(0 – 127)	
2	Dyna Level Offset	0 – 127	(0 – 127)	
3	Feedback Level	-63 – +63	(1 – 127)	
4	Attack Time	0.3ms – 227ms	(0 – 127)	17
5	Release Time	2.6ms – 2171ms	(0 – 127)	18
6	Release Curve	0 – 127	(0 – 127)	
7	Direction	up, down	(0 – 1)	
8	Dyna Threshold Level	0 – 127	(0 – 127)	
9	—			
10	Dry/Wet Balance	D63>W – D=W – D<W63	(1 – 127)	
11	Stage	4, 5, 6	(4 – 6)	
12	—			
13 – 16: Same as the parameters shaded in gray in CROSS DELAY on page 96.				

Category — TREMOLO&ROTARY

[1] AUTO PAN

No.	Parameter	Range	Value	Table No.
1	LFO Speed	0.0Hz – 39.70Hz	(0 – 127)	1
2	L/R Depth	0 – 127	(0 – 127)	
3	F/R Depth	0 – 127	(0 – 127)	
4	PAN Direction	L<>R, L>>R, L<<R, Lturn, Rturn, L/R	(0 – 5)	
5	LFO Wave	0 – 28	(0 – 28)	
6 – 9: Same as the parameters shaded in gray in CROSS DELAY on page 96.				
10	—			
11	EQ Mid Frequency	100Hz – 10.0kHz	(14 – 54)	3
12	EQ Mid Gain	-12dB – +12dB	(52 – 76)	
13	EQ Mid Width	0.1 – 12.0	(1 – 120)	
14	—			
15	Input Mode	mono, stereo	(0 – 1)	
16	—			

[2] TREMOLO

No.	Parameter	Range	Value	Table No.
1	LFO Speed	0.0Hz – 39.70Hz	(0 – 127)	1
2	AM Depth	0 – 127	(0 – 127)	
3	PM Depth	0 – 127	(0 – 127)	
4	—			
5	—			
6 – 9: Same as the parameters shaded in gray in CROSS DELAY on page 96.				
10	—			
11	EQ Mid Frequency	100Hz – 10.0kHz	(14 – 54)	3
12	EQ Mid Gain	-12dB – +12dB	(52 – 76)	
13	EQ Mid Width	0.1 – 12.0	(1 – 120)	
14	LFO Phase difference	-180deg – +180deg	(4 – 124)	
15	Input Mode	mono, stereo	(0 – 1)	
16	—			

[3] ROTARY SPEAKER

No.	Parameter	Range	Value	Table No.
1	Rotor Speed Slow	0.0Hz – 2.65Hz	(0 – 63)	1
2	Horn Speed Slow	0.0Hz – 2.65Hz	(0 – 63)	1
3	Rotor Speed Fast	0.0Hz – 39.70Hz	(64 – 127)	1
4	Horn Speed Fast	0.0Hz – 39.70Hz	(64 – 127)	1
5	Slow-Fast Time of R	0 – 127	(0 – 127)	
6	Slow-Fast Time of H	0 – 127	(0 – 127)	
7	Drive Rotor	0 – 127	(0 – 127)	
8	Drive Horn	0 – 127	(0 – 127)	
9	Rotor/Horn Balance	R63>H – R=H – R<H63	(1 – 127)	
10	—			
11 – 14: Same as the parameters shaded in gray in CROSS DELAY on page 96.				
15	Mic L-R Angle	0deg – 180deg	(0 – 60)	
16	Speed Control	Slow, Fast	(0 – 1)	

Category — DISTORTION

[1] AMP SIMULATOR 1

No.	Parameter	Range	Value	Table No.
1	Overdrive	0 _ 100%	(0 – 100)	
2	Device	Transistor, Vintage Tube, Distortion 1, Distortion 2, Fuzz	(0 – 4)	
3	Speaker Type	Flat, Stack, Combo, Twin, Radio, Megaphone	(0 – 5)	
4	Presence	-10 _ 10	(0 – 20)	
5	Output Level	0 _ 100%	(0 – 100)	
6	—			
7	—			
8	—			
9	—			
10	Dry/Wet Balance	D63>W _ D=W _ D<W63	(1 – 127)	
11	—			
12	—			
13	—			
14	—			
15	—			
16	—			

[2] AMP SIMULATOR 2

No.	Parameter	Range	Value	Table No.
1	Overdrive	0 – 127	(0 – 127)	
2	AMP Type	off, Stack, Combo, Tube, Crunch, Hi Gain, British	(0 – 6)	
3	LPF Cutoff Frequency	1.0kHz – 20.0kHz	(34 – 60)	3
4	Output Level	0 – 127	(0 – 127)	
5	—			
6	—			
7	—			
8	—			
9	—			
10	Dry/Wet Balance	D63>W – D=W – D<W63	(1 – 127)	
11	—			
12	—			
13	—			
14	—			
15	—			
16	—			

[3] COMP DISTORTION

No.	Parameter	Range	Value	Table No.
1	Overdrive	0 – 127	(0 – 127)	
2	EQ Low Frequency	32Hz – 2.0kHz	(4 – 40)	3
3	EQ Low Gain	-12dB – +12dB	(52 – 76)	
4	LPF Cutoff Frequency	1.0kHz – 20.0kHz	(34 – 60)	3
5	Output Level	0 – 127	(0 – 127)	
6	—			
7	EQ Mid Frequency	100Hz – 10.0kHz	(14 – 54)	3
8	EQ Mid Gain	-12dB – +12dB	(52 – 76)	
9	EQ Mid Width	0.1 – 12.0	(1 – 120)	
10	Dry / Wet Balance	D63>W – D=W – D<W63	(1 – 127)	
11	Edge	0 – 127	(0 – 127)	
12	Attack	1ms – 40ms	(0 – 19)	8
13	Release	10ms – 680ms	(0 – 15)	9
14	Threshold	-48dB – -6dB	(79 – 121)	
15	Ratio	1 – 20.0	(0 – 7)	10
16	—			

[3] COMP DISTORTION DELAY

No.	Parameter	Range	Value	Table No.
1	Overdrive	0 – 100%	(0 – 100)	
2	Device	Transistor, Vintage Tube, Distortion 1, Distortion 2, Fuzz	(0 – 4)	
3	Speaker Type	Flat, Stack, Combo, Twin, Radio, Megaphone	(0 – 5)	
4	Presence	-10 – 10	(0 – 20)	
5	Output Level	0 – 100%	(0 – 100)	
6	Delay Time L	0.1ms – 1638.3ms	(1 – 16383)	
7	Delay Time R	0.1ms – 1638.3ms	(1 – 16383)	
8	Feedback Time	0.1ms – 1638.3ms	(1 – 16383)	
9	Feedback Level	-63 – +63	(1 – 127)	
10	Dry/Wet Balance	D63>W – D=W – D<W63	(1 – 127)	
11	Delay Mix	0 – 127	(0 – 127)	
12	Feedback High Damp	0.1 – 1.0	(1 – 10)	
13	Compress	-48dB – -6dB	(79 – 121)	
14	—			
15	—			
16	—			

Category — GUITAR EFX*

[1] US COMBO*

No.	Parameter	Range	Value	Table No
1	Gain Boost	Low, High	(0 – 1)	
2	Volume	0.0 – 10.0	(0 – 100)	
3	Low Cut	0.0 – 10.0	(0 – 100)	
4	Mid Cut	0.0 – 10.0	(0 – 100)	
5	Mid Width	0.0 – 10.0	(0 – 100)	
6	Mid Sweep	0.0 – 10.0	(0 – 100)	
7	High Cut	0.0 – 10.0	(0 – 100)	
8	Balance	0.0 – 10.0	(0 – 100)	
9	Output	0 – 127	(0 – 127)	
10	—			
11	Speaker Type	Off, BS 4x12, AC 2x12, AC 1x12, AC 4x10, BC 2x12, AM 4x12, YC 4x12, JC 2x12, OC 2x12, OC 1x8	(0 – 10)	
12	Speaker Air	0 – 2	(0 – 2)	
13	Mic Position	Center, Edge	(0 – 1)	
14	Presence	0.0 – 10.0	(0 – 100)	
15	—			
16	—			

[2] JAZZ COMBO*

No.	Parameter	Range	Value	Table No
1	Panning	0.0 – 10.0	(0 – 100)	
2	Volume	0.0 – 10.0	(0 – 100)	
3	Distortion	Off, 0.1 – 10.0	(0 – 100)	
4	Bass	0.0 – 10.0	(0 – 100)	
5	Middle	0.0 – 10.0	(0 – 100)	
6	Treble	0.0 – 10.0	(0 – 100)	
7	High Treble	0.0 – 10.0	(0 – 100)	
8	—			
9	Output	0 – 127	(0 – 127)	
10	—			
11	Speaker Type	Off, BS 4x12, AC 2x12, AC 1x12, AC 4x10, BC 2x12, AM 4x12, YC 4x12, JC 2x12, OC 2x12, OC 1x8	(0 – 10)	
12	Speaker Air	0 – 2	(0 – 2)	
13	Mic Position	Center, Edge	(0 – 1)	
14	Chorus	Off, Chorus, Vib	(0 – 2)	
15	Vib Speed	0.0 – 10.0	(0 – 100)	
16	Depth	0.0 – 10.0	(0 – 100)	

[3] US HIGH GAIN*

No.	Parameter	Range	Value	Table No
1	Type	Raw1, Vintage1, Modern1, Raw2, Vintage2, Modern2	(0 – 5)	
2	Gain	0.0 – 10.0	(0 – 100)	
3	—			
4	Bass	0.0 – 10.0	(0 – 100)	
5	Middle	0.0 – 10.0	(0 – 100)	
6	Treble	0.0 – 10.0	(0 – 100)	
7	Presence	0.0 – 10.0	(0 – 100)	
8	Master Volume	0.0 – 10.0	(0 – 100)	
9	Output	0 – 127	(0 – 127)	
10	—			
11	Speaker Type	Off, BS 4x12, AC 2x12, AC 1x12, AC 4x10, BC 2x12, AM 4x12, YC 4x12, JC 2x12, OC 2x12, OC 1x8	(0 – 10)	
12	Speaker Air	0 – 2	(0 – 2)	
13	Mic Position	Center, Edge	(0 – 1)	
14	—			
15	—			
16	—			

[4] BRITISH LEAD*

No.	Parameter	Range	Value	Table No
1	Type	Crunch, Hi-Gain, Lead	(0 – 2)	
2	Preamp	0.0 – 10.0	(0 – 100)	
3	Tone Shift	Normal, Loose, Tight	(0 – 2)	
4	Bass	0.0 – 10.0	(0 – 100)	
5	Middle	0.0 – 10.0	(0 – 100)	
6	Treble	0.0 – 10.0	(0 – 100)	
7	Presence	0.0 – 10.0	(0 – 100)	
8	Master Volume	0.0 – 10.0	(0 – 100)	
9	Output	0 – 127	(0 – 127)	
10	—			
11	Speaker Type	Off, BS 4x12, AC 2x12, AC 1x12, AC 4x10, BC 2x12, AM 4x12, YC 4x12, JC 2x12, OC 2x12, OC 1x8	(0 – 10)	
12	Speaker Air	0 – 2	(0 – 2)	
13	Mic Position	Center, Edge	(0 – 1)	
14	—			
15	—			
16	—			

[5] MULTI FX*

No.	Parameter	Range	Value	Table No
1	Comp. Sustain	Off, 0.1 – 10.0	(0 – 100)	
2	Wah SW	Off, Wah Pedal, Auto+ Full, Auto+ Mid, Auto+ Light, Auto- Full, Auto- Mid, Auto- Light	(0 – 7)	
3	Wah Pedal	0 – 127	(0 – 127)	
4	Dist SW	Off, Overdrive, Distortion1, Distortion2, Clean, Crunch, Hi-Gain, Modern	(0 – 7)	
5	Dist Drive	0.0 – 10.0	(0 – 100)	
6	Dist EQ	High Boost, Mid Boost, Mid Cut 1, Mid Cut 2, Mid Cut 3, Low Cut 1, Low Cut 2, High Cut, High/Low	(0 – 8)	
7	Dist Tone	0.0 – 10.0	(0 – 100)	
8	Dist Presence	0.0 – 10.0	(0 – 100)	
9	Output	0 – 127	(0 – 127)	
10	—			
11	Speaker Type	Off, Stack, Twin, Tweed, Oldies, Modern, Mean, Soft, Small, Dip1, Dip2, Metal, Light	(0 – 12)	
12	LFO Speed	0.1Hz – 9.925Hz	(0 – 127)	39
13	Phaser SW	Off, Standard, Wide, Vibe, Tremolo	(0 – 4)	
14	Delay SW	Off, Delay M, Echo1 M, Echo2 M, Chorus M, Dl Chorus M, Flanger1 M, Flanger2 M, Flanger3 M, Delay St, Echo1 St, Echo2 St, Chorus St, Dl Chorus St, Flanger1 St, Flanger2 St, Flanger3 St	(0 – 16)	
15	Delay Ctrl	0 – 127	(0 – 127)	
16	Delay Time	0 – 127	(0 – 127)	

[6] SMALL STEREO*

No.	Parameter	Range	Value	Table No
1	Comp. SW	Off, On	(0 – 1)	
2	Comp. Sustain	0.0 – 10.0	(0 – 100)	
3	Comp. Level	0.0 – 10.0	(0 – 100)	
4	Dist Type	Overdrive, Distortion1, Distortion2, Clean, Crunch, Hi-Gain, Modern	(1 – 7)	
5	Dist Drive	0.0 – 10.0	(0 – 100)	
6	Dist EQ	High Boost, Mid Boost, Mid Cut 1, Mid Cut 2, Mid Cut 3, Low Cut 1, Low Cut 2, High Cut, High/Low	(0 – 8)	
7	Dist Tone	0.0 – 10.0	(0 – 100)	
8	Dist Presence	0.0 – 10.0	(0 – 100)	
9	Output	0 – 127	(0 – 127)	
10	—			
11	Speaker Type	Off, Stack, Twin, Tweed, Oldies, Modern, Mean, Soft, Small, Dip1, Dip2, Metal, Light	(0 – 12)	
12	—			
13	—			
14	—			
15	—			
16	—			

[7] BRITISH COMBO*

No.	Parameter	Range	Value	Table No
1	Mode	Bright, Top Boost	(0 – 1)	
2	Normal	0.0 – 10.0	(0 – 100)	
3	Brilliant	0.0 – 10.0	(0 – 100)	
4	Bass	0.0 – 10.0	(0 – 100)	
5	—			
6	Treble	0.0 – 10.0	(0 – 100)	
7	Cut	0.0 – 10.0	(0 – 100)	
8	—			
9	Output	0 – 127	(0 – 127)	
10	—			
11	Speaker Type	Off, BS 4x12, AC 2x12, AC 1x12, AC 4x10, BC 2x12, AM 4x12, YC 4x12, JC 2x12, OC 2x12, OC 1x8	(0 – 10)	
12	Speaker Air	0 – 2	(0 – 2)	
13	Mic Position	Center, Edge	(0 – 1)	
14	—			
15	—			
16	—			

[8] BRITISH LEGEND*

No.	Parameter	Range	Value	Table No
1	Sensitivity	High, Low	(0 – 1)	
2	Preamp	0.0 – 10.0	(0 – 100)	
3	—			
4	Bass	0.0 – 10.0	(0 – 100)	
5	Middle	0.0 – 10.0	(0 – 100)	
6	Treble	0.0 – 10.0	(0 – 100)	
7	Presence	0.0 – 10.0	(0 – 100)	
8	Master Volume	0.0 – 10.0	(0 – 100)	
9	Output	0 – 127	(0 – 127)	
10	—			
11	Speaker Type	Off, BS 4x12, AC 2x12, AC 1x12, AC 4x10, BC 2x12, AM 4x12, YC 4x12, JC 2x12, OC 2x12, OC 1x8	(0 – 10)	
12	Speaker Air	0 – 2	(0 – 2)	
13	Mic Position	Center, Edge	(0 – 1)	
14	—			
15	—			
16	—			

Category — COMPRESSOR

[1] VCM COMPRESSOR 376

No.	Parameter	Range	Value	Table No.
1	Input Level	-∞ – 0.00dB	(0 – 200)	27
2	Output Level	-∞ – 0.00dB	(0 – 200)	27
3	Ratio	2, 4, 8, 12, 20	(0 – 4)	
4	Attack	0.022ms – 50.40ms	(0 – 200)	28
5	Release	10.88ms – 544.22ms	(0 – 200)	29
6	Meter	OUT, GR	(0 – 1)	
7	—			
8	—			
9	—			
10	—			
11	—			
12	—			
13	—			
14	—			
15	—			
16	—			

[2] CLASSIC COMPRESSOR

No.	Parameter	Range	Value	Table No.
1	Attack	1ms – 40ms	(0 – 19)	8
2	Release	10ms – 680ms	(0 – 15)	9
3	Threshold	-48dB – -6dB	(79 – 121)	
4	Ratio	1 – 20.0	(0 – 7)	10
5	Output Level	0 – 127	(0 – 127)	
6	—			
7	—			
8	—			
9	—			
10	—			
11	—			
12	—			
13	—			
14	—			
15	—			
16	—			

[3] MULTI BAND COMP

No.	Parameter	Range	Value	Table No.
1	Low Attack	1ms – 200ms	(0 – 29)	8
2	Low Threshold	-54dB – -6dB	(73 – 121)	
3	Low Ratio	1 – 20.0	(0 – 7)	10
4	Low Gain	-∞ – +18dB	(0 – 55)	15
5	Mid Attack	1ms – 200ms	(0 – 29)	8
6	Mid Threshold	-54dB – -6dB	(73 – 121)	
7	Mid Ratio	1 – 20.0	(0 – 7)	10
8	Mid Gain	-∞ – +18dB	(0 – 55)	15
9	High Attack	1ms – 200ms	(0 – 29)	8
10	High Threshold	-54dB – -6dB	(73 – 121)	
11	High Ratio	1 – 20.0	(0 – 7)	10
12	High Gain	-∞ – +18dB	(0 – 55)	15
13	Divide Freq Low	16Hz – 20kHz	(0 – 124)	31
14	Divide Freq High	16Hz – 20kHz	(0 – 124)	31
15	Common Release	10msec – 3000msec	(0 – 23)	9
16	—			

Category — WAH

[1] VCM AUTO WAH

No.	Parameter	Range	Value	Table No.
1	Speed	0.100Hz – 20.00Hz	(0 – 254)	24
2	Bottom	0 – 127	(0 – 127)	
3	Top	0 – 127	(0 – 127)	
4	Resonance Offset	-12.0 – +12.0	(40 – 88)	
5	LFO Wave	Sin, Trp	(0 – 1)	
6	Type	High, Mid, Low Bass	(0 – 3)	
7	Overdrive	0.0dB – +40.0dB	(0 – 80)	
8	Output	-20.0dB – +10.0dB	(24 – 84)	
9	—			
10	—			
11	—			
12	—			
13	—			
14	—			
15	—			
16	—			

When the value of Bottom is greater than Top, the sound will not be modulated and only the Bottom value is available.

[2] VCM TOUCH WAH

No.	Parameter	Range	Value	Table No.
1	Sensitivity	0 – 127	(0 – 127)	
2	Bottom	0 – 127	(0 – 127)	
3	Top	0 – 127	(0 – 127)	
4	Resonance Offset	-12.0 – +12.0	(40 – 88)	
5	Direction	up, down	(0 – 1)	
6	Type	High, Mid, Low, Bass	(0 – 3)	
7	Overdrive	0.0dB – +40.0dB	(0 – 80)	
8	Output	-20.0dB – +10.0dB	(24 – 84)	
9	—			
10	—			
11	Attack Offset	-5 – +5	(59 – 69)	
12	—			
13	—			
14	—			
15	—			
16	—			

When the value of Bottom is greater than Top, the sound will not be modulated and only the Bottom value is available.

[3] VCM PEDAL WAH

No.	Parameter	Range	Value	Table No.
1	Pedal Control	0 – 127	(0 – 127)	
2	Bottom	0 – 127	(0 – 127)	
3	Top	0 – 127	(0 – 127)	
4	Resonance Offset	-12.0 – +12.0	(40 – 88)	
5	Direction	up, down	(0 – 1)	
6	Type	High, Mid, Low, Bass	(0 – 3)	
7	Overdrive	0.0dB – +40.0dB	(0 – 80)	
8	Output	-20.0dB – +10.0dB	(24 – 84)	
9	—			
10	—			
11	—			
12	—			
13	—			
14	—			
15	—			
16	—			

When the value of Bottom is greater than Top, the sound will not be modulated and only the Bottom value is available.

Category — Lo-Fi

[1] LO-FI

No.	Parameter	Range	Value	Table No.
1	Sampling Freq. Control	44.1 – 344Hz	(0 – 127)	13
2	Word Length	1 – 127	(1 – 127)	
3	Output Gain	-6dB – +36dB	(0 – 42)	
4	Pre-LPF Cutoff Frequency	63Hz – 20.0kHz	(10 – 60)	3
5	Filter Type	thru, Power Bass, Radio, Telephone, Clean, Low	(0 – 5)	
6	Pre-LPF Resonance	1 – 12.0	(10 – 120)	
7	Bit Assign	0 – 6	(0 – 6)	
8	Emphasis	off/on	(0 – 1)	
9	—			
10	Dry/Wet Balance	D63>W – D=W – D<W63	(1 – 127)	
11	—			
12	—			
13	—			
14	—			
15	Input Mode	mono, stereo	(0 – 1)	
16	—			

[2] NOISY

No.	Parameter	Range	Value	Table No.
1	Mod Depth	0 – 10	(0 – 10)	
2	Mod Speed	0 – 127	(0 – 127)	
3	Mod Feedback	-63 – +63	(1 – 127)	
4	Mod Mix Balance	1 – 127	(1 – 127)	
5	Overdrive	0 – 127	(0 – 127)	
6	AM Speed	0.00Hz – 39.7Hz	(0 – 127)	1
7	AM Depth	0 – 127	(0 – 127)	
8	LPF Cutoff Frequency	1.0kHz – 20.0kHz	(34 – 60)	3
9	LPF Resonance	1.0 – 12.0	(10 – 120)	
10	Dry/Wet Balance	D63>W – D=W – D<W63	(1 – 127)	
11	EQ Frequency	100Hz – 10.0kHz	(14 – 54)	3
12	EQ Gain	-12 – +12dB	(52 – 76)	
13	EQ Width	1.0 – 12.0	(10 – 120)	
14	—			
15	—			
16	—			

[3] DIGITAL TURNTABLE

No.	Parameter	Range	Value	Table No.
1	Click Density	0 – 5	(0 – 5)	
2	Click Level	0 – 127	(0 – 127)	
3	Noise Tone	0 – 6	(0 – 6)	
4	Noise Mod Speed	0.00Hz – 39.7Hz	(0 – 127)	1
5	Noise Mod Depth	0 – 127	(0 – 127)	
6	Dry Send to Noise	0 – 127	(0 – 127)	
7	Noise LPF Cutoff Frequency	1.0kHz – 20.0kHz	(34 – 60)	3
8	Noise LPF Q	1.0 – 12.0	(10 – 120)	
9	Noise Level	0 – 127	(0 – 127)	
10	—			
11	Dry Level	0 – 127	(0 – 127)	
12	Dry LPF Cutoff Frequency	1.0kHz – 20.0kHz	(34 – 60)	3
13	—			
14	—			
15	—			
16	—			

Category — TEC

[1] RING MODULATOR

No.	Parameter	Range	Value	Table No.
1	OSC Frequency Coarse	0.5 – 5kHz	(0 – 127)	19
2	OSC Frequency Fine	0 – 127	(0 – 127)	
3	LFO Wave	tri, sine	(0 – 1)	
4	LFO Depth	0 – 127	(0 – 127)	
5	LFO Speed	0.0Hz – 39.70Hz	(0 – 127)	1
6	HPF Cutoff Frequency	20Hz – 8.0kHz	(0 – 52)	3
7	LPF Cutoff Frequency	1.0kHz – 20.0kHz	(34 – 60)	3
8	—			
9	—			
10	Dry/Wet Balance	D63>W – D=W – D<W63	(1 – 127)	
11	—			
12	—			
13 – 16: Same as the parameters shaded in gray in CROSS DELAY on page 96.				

[2] DYNAMIC RING MODULATOR

No.	Parameter	Range	Value	Table No.
1	Sensitivity	0 – 127	(0 – 127)	
2	HPF Cutoff Frequency	20Hz – 8.0kHz	(0 – 52)	3
3	LPF Cutoff Frequency	1.0kHz – 20.0kHz	(34 – 60)	3
4	Attack Time	0.3ms – 227ms	(0 – 127)	17
5	Release Time	2.6ms – 2171ms	(0 – 127)	18
6	Release Curve	0 – 127	(0 – 127)	
7	Direction	up, down	(0 – 1)	
8	Dyna Threshold Level	0 – 127	(0 – 127)	
9	Dyna Level Offset	0 – 127	(0 – 127)	
10	Dry/Wet Balance	D63>W – D=W – D<W63	(1 – 127)	
11	—			
12	—			
13 – 16: Same as the parameters shaded in gray in CROSS DELAY on page 96.				

[3] DYNAMIC FILTER

No.	Parameter	Range	Value	Table No.
1	Filter Type	LPF (12dB), LPF (18dB), LPF (24dB), HPF, BPF, BEF	(0 – 5)	
2	Sensitivity	0 – 127	(0 – 127)	
3	Dyna Level Offset	0 – 127	(0 – 127)	
4	Resonance	-16 – +111	(0 – 127)	
5	Attack Time	0.3ms – 227ms	(0 – 127)	17
6	Release Time	2.6ms – 2171ms	(0 – 127)	18
7	Release Curve	0 – 127	(0 – 127)	
8	Direction	up, down	(0 – 1)	
9	Dyna Threshold Level	0 – 127	(0 – 127)	
10	Dry/Wet Balance	D63>W – D=W – D<W63	(1 – 127)	
11	—			
12	—			
13 – 16: Same as the parameters shaded in gray in CROSS DELAY on page 96.				

[4] AUTO SYNTH

No.	Parameter	Range	Value	Table No.
1	Mod Speed	0 – 127	(0 – 127)	
2	Mod Wave Type	Type A, Type B, Type C, Type D	(0 – 3)	
3	Mod Depth	0 – 127	(0 – 127)	
4	Mod Depth Ofst R	-63 – +63	(1 – 127)	
5	HPF Cutoff Frequency	20Hz – 8.0kHz	(0 – 52)	3
6	LPF Cutoff Frequency	1.0kHz – 20.0kHz	(34 – 60)	3
7	Delay Time	0.1 – 370.0ms	(1 – 3700)	
8	Delay Time Ofst R	0 – 884	(0 – 884)	
9	Delay Level	0 – 127	(0 – 127)	
10	Dry Mix Level	0 – 127	(0 – 127)	
11	Feedback Level	-63 – +63	(1 – 127)	
12	FB Level Ofst R	-63 – +63	(1 – 127)	
13	AM Speed	0.00Hz – 39.7Hz	(0 – 127)	1
14	AM Wave	tri, sine, saw up, saw down	(0 – 3)	
15	AM Depth	0 – 127	(0 – 127)	
16	AM Inverse R	normal, inverse	(0 – 1)	

[5] ISOLATOR

No.	Parameter	Range	Value	Table No.
1	On/off Switch	on, off	(0 – 1)	
2	Low Level	-64 – +63	(0 – 127)	
3	Mid Level	-64 – +63	(0 – 127)	
4	High Level	-64 – +63	(0 – 127)	
5	Low Mute	off/on	(0 – 1)	
6	Mid Mute	off/on	(0 – 1)	
7	High Mute	off/on	(0 – 1)	
8	—			
9	—			
10	—			
11	—			
12	—			
13	—			
14	—			
15	—			
16	—			

[6] SLICE

No.	Parameter	Range	Value	Table No.
1	Divide Type	16th – 4th	(5 – 11)	14
2	Gate Time	0 – 100%	(0 – 100)	
3	Pan AEG Type	A – E	(0 – 4)	
4	Pan AEG Min Level	0 – 127	(0 – 127)	
5	Pan Depth	-63 –+63	(1 – 127)	
6	Divide Min Level	0 – 127	(0 – 127)	
7	Pan Type	A – J	(0 – 9)	
8	Overdrive	0 – 127	(0 – 127)	
9	AEG Phase	0 – 15 (x 16th note)	(0 – 15)	
10	Dry/Wet Balance	D63>W – D=W – D<W63	(1 – 127)	
11	—			
12	—			
13 – 16: Same as the parameters shaded in gray in CROSS DELAY on page 96.				

[7] TECH MODULATION

No.	Parameter	Range	Value	Table No.
1	Mod Speed	0 – 127	(0 – 127)	
2	Mod Depth	0 – 127	(0 – 127)	
3	Mod Gain	-12 – +12dB	(52 – 76)	
4	Mod Mix Balance	D63>W – D=W – D<W63	(1 – 127)	
5	Pre Mod HPF Cutoff Frequency	20Hz – 8.0kHz	(0 – 52)	3
6	Mod LPF Cutoff Frequency	1.0kHz – 20.0kHz	(34 – 60)	3
7	Mod LPF Resonance	1.0 – 12.0	(10 – 120)	
8	Delay Time	0.1 – 740.0ms	(1 – 7400)	
9	Delay Time Ofst R	0 – 884	(0 – 884)	
10	Dry/Wet Balance	D63>W – D=W – D<W63	(1 – 127)	
11	Feedback Level	-63 – +63	(1 – 127)	
12	FB Level Ofst R	-63 – +63	(1 – 127)	
13	Feedback Hi Damp	0.1 – 1.0	(1 – 10)	
14	FB Hi Damp Ofst R	-0.9 – +0.9	(1 – 19)	
15	—			
16	—			

Category — MISC

[1] VCM EQ 501

No.	Parameter	Range	Value	Table No.
1	EQ1 (LSH) Frequency	31.5Hz – 2.0kHz	(12 – 84)	30
2	EQ1 (LSH) Gain	-12.0dB – +12.0dB	(60 – 300)	
3	EQ2 Q	0.50 – 16.00	(0 – 60)	31
4	EQ2 Frequency	50.0 Hz – 20.0kHz	(20 – 124)	30
5	EQ2 Gain	-18.0dB – +18.0dB	(0 – 360)	
6	EQ3 Q	0.50 – 16.00	(0 – 60)	31
7	EQ3 Frequency	50.0 Hz – 20.0kHz	(20 – 124)	30
8	EQ3 Gain	-18.0dB – +18.0dB	(0 – 360)	
9	EQ4 Q	0.50 – 16.00	(0 – 60)	31
10	EQ4 Frequency	50.0 Hz – 20.0kHz	(20 – 124)	30
11	EQ4 Gain	-18.0dB – +18.0dB	(0 – 360)	
12	EQ5 (HSH) Frequency	500Hz – 20.0kHz	(60 – 124)	30
13	EQ5 (HSH) Gain	-12.0dB – +12.0dB	(60 – 300)	
14	Output Level	-12.0dB – +12.0dB	(60 – 300)	
15				
16				

[2] HARMONIC ENHANCER

No.	Parameter	Range	Value	Table No.
1	HPF Cutoff Frequency	500Hz – 16.0kHz	(28 – 58)	3
2	Overdrive	0 – 127	(0 – 127)	
3	Mix Level	0 – 127	(0 – 127)	
4	—			
5	—			
6	—			
7	—			
8	—			
9	—			
10	—			
11	—			
12	—			
13	—			
14	—			
15	—			
16	—			

[3] Talking Modulator

No.	Parameter	Range	Value	Table No.
1	Vowel	a/i/u/e/o	(0 – 4)	
2	Move Speed	1 – 62	(1 – 62)	
3	Overdrive	0 – 127	(0 – 127)	
4	Output Level	0 – 127	(0 – 127)	
5	—			
6	—			
7	—			
8	—			
9	—			
10	—			
11	—			
12	—			
13	—			
14	—			
15	—			
16	—			

[4] DAMPER RESONANCE

No.	Parameter	Range	Value	Table No.
1	HPF Cutoff Frequency	20Hz – 8.0kHz	(0 – 52)	3
2	LPF Cutoff Frequency	1.0kHz – 20.0kHz	(34 – 60)	3
3	EQ Low Frequency	32Hz – 2.0kHz	(4 – 40)	3
4	EQ Low Gain	-12 – +12dB	(52 – 76)	
5	Hi Resonance	0.1 – 1.0	(1 – 10)	
6	Pedal Response	slow/normal/fast	(0 – 2)	
7	—			
8	—			
9	—			
10	Dry/Wet Balance	D63>W – D=W – D<W63	(1 – 127)	
11	—			
12	—			
13	—			
14	—			
15	—			
16	Damper Control	0 – 127	(0 – 127)	

[5] PITCH CHANGE

No.	Parameter	Range	Value	Table No.
1	Pitch 1	-24 – +24	(40 – 88)	
2	Fine 1	-50 – +50	(14 – 114)	
3	Initial Delay 1	0.1ms – 400.0ms	(0 – 127)	7
4	Feedback Level 1	-63 – +63	(1 – 127)	
5	Pitch 2	-24 – +24	(40 – 88)	
6	Fine 2	-50 – +50	(14 – 114)	
7	Initial Delay 2	0.1ms – 400.0ms	(0 – 127)	7
8	Feedback Level 2	-63 – +63	(1 – 127)	
9	—			
10	Dry/Wet Balance	D63>W – D=W – D<W63	(1 – 127)	
11	Pan 1	L63 – C – R63	(1 – 127)	
12	Output Level 1	0 – 127	(0 – 127)	
13	Pan 2	L63 – C – R63	(1 – 127)	
14	Output Level 2	0 – 127	(0 – 127)	
15	—			
16	—			

[6] EARLY REFLECTION

No.	Parameter	Range	Value	Table No.
1	Type	S-hall, L-hall, random, reverse, plate, spring	(0 – 5)	
2	Room Size	0.1 – 20.0	(0 – 127)	6
3	Diffusion	0 – 10	(0 – 10)	
4	Initial Delay	0.1ms – 200.0ms	(0 – 127)	5
5	Feedback Level	-63 – +63	(1 – 127)	
6	HPF Cutoff Frequency	20Hz – 8.0kHz	(0 – 52)	3
7	LPF Cutoff Frequency	1.0kHz – 20.0kHz	(34 – 60)	3
8	—			
9	—			
10	Dry/Wet Balance	D63>W – D=W – D<W63	(1 – 127)	
11	Liveness	0 – 10	(0 – 10)	
12	Density	0 – 3	(0 – 3)	
13	Feedback High Damp	0.1 – 1.0	(1 – 10)	
14	—			
15	—			
16	—			

Insertion L Block

[0] THRU

When this type is selected, no parameters are available.

[1] VOCODER

No.	Parameter	Range	Value	Table No.
1	Formant Shift	-2, -1, 0, +1, +2	(62 – 66)	
2	Formant Offset	-63 – +63	(1 – 127)	
3	Vocoder Attack	1ms – 200ms	(0 – 29)	
4	Vocoder Release	10ms – 3000ms	(0 – 23)	
5	Gate Switch	off/on	(0 – 1)	
6	Mic Gate Threshold	-72dB – -30dB	(55 – 97)	
7	HPF Cutoff Frequency	Thru, 500Hz – 16.0kHz	(27 – 58)	
8	HPF Output Level	0 – 127	(0 – 127)	
9	—			
10	Dry/Wet Balance	D63>W – D=W – D<W63	(1 – 127)	
11	Mic Level	0 – 127	(0 – 127)	
12	Inst Input Level	0 – 127	(0 – 127)	
13	Noise Input Level	0 – 127	(0 – 127)	
14	Output Level	0 – 127	(0 – 127)	
15	BPF1 Gain	-18dB – +18dB	(46 – 82)	
16	BPF2 Gain	-18dB – +18dB	(46 – 82)	
17	BPF3 Gain	-18dB – +18dB	(46 – 82)	
18	BPF4 Gain	-18dB – +18dB	(46 – 82)	
19	BPF5 Gain	-18dB – +18dB	(46 – 82)	
20	BPF6 Gain	-18dB – +18dB	(46 – 82)	
21	BPF7 Gain	-18dB – +18dB	(46 – 82)	
22	BPF8 Gain	-18dB – +18dB	(46 – 82)	
23	BPF9 Gain	-18dB – +18dB	(46 – 82)	
24	BPF10 Gain	-18dB – +18dB	(46 – 82)	

Master Effect Block

THRU type is not included in the Master Effect Block. If you wish to bypass this block, turn the [MASTER EFFECT] off.

DELAY L, R (Stereo)
LO-FI
COMP DISTORTION
ISOLATOR
DYNAMIC FILTER
SLICE
RING MODULATOR
MULTI BAND COMP
VCM COMPRESSOR 376

Master EQ Block

[0] MEQ

No.	Parameter	Range	Value	Table No.
1	EQ1 Gain	-12dB – +12dB	(52 – 76)	
2	EQ1 Frequency	32Hz – 2.0kHz	(4 – 40)	3
3	EQ1 Q	0.1 – 12.0	(1 – 120)	
4	EQ1 Shape	shelving, peaking	(0 – 1)	
5	EQ2 Gain	-12dB – +12dB	(52 – 76)	
6	EQ2 Frequency	100Hz – 10kHz	(14 – 54)	3
7	EQ2 Q	0.1 – 12.0	(1 – 120)	
8	—			
9	EQ3 Gain	-12dB – +12dB	(52 – 76)	
10	EQ3 Frequency	100Hz – 10kHz	(14 – 54)	3
11	EQ3 Q	0.1 – 12.0	(1 – 120)	
12	—			
13	EQ4 Gain	-12dB – +12dB	(52 – 76)	
14	EQ4 Frequency	100Hz – 10kHz	(14 – 54)	3
15	EQ4 Q	0.1 – 12.0	(1 – 120)	
16	—			
17	EQ5 Gain	-12dB – +12dB	(52 – 76)	
18	EQ5 Frequency	500Hz – 16kHz	(28 – 58)	3
19	EQ5 Q	0.1 – 12.0	(1 – 120)	
20	EQ5 Shape	shelving, peaking	(0 – 1)	

When the EQ Shape1 is set to Peaking, the range of EQ Frequency 1 is 63Hz – 2.0kHz (10 – 40).

Effect Preset List

* OS V1.50 or later

Category	Effect Type Name	Preset Name
Reverb	Rev-X Hall	Basic Small Hall Clean Church Bright Hall
	R3 Hall	Basic Big Hall Backstage Ballad Light
	SPX Hall	Basic Big Hall Backstage Light Gymnasium
	HD Hall*	Large Hall Medium Hall Bright Hall
	Rev-X Room	Basic Basement Garage Bedroom
	R3 Room	Basic Open Wide Tight
	SPX Room	Basic Open Wide Tight
	HD Room*	Room Power Room
	R3 Plate	Basic Bright Vocal Smooth Vocal Short Bright Metal Splash
	HD Plate*	Large Plate Medium Plate Rattle Plate
	SPX Stage	Basic Small Big
	Space Simulator	Tunnel Basement Canyon White Room Small Room Live Room 3 Walls
Delay	Control Delay	Basic
	Cross Delay	Basic Short Long Very Long
	Tempo Cross Delay	4beat Echo Dotted 8th Echo 8beat Echo Triplet Echo 2beat Echo
	Tempo Delay Mono	4beat Echo Mono Out 4beat Dotted 8th Echo 8beat Echo Mono Out Dot8 Mono Out 8beat Triplet Echo Triplet Mono Analog Delay
	Tempo Delay Stereo	4beat Echo Dotted 8th Echo 8beat Echo Triplet Echo
	Delay LR	Basic Mono Doubling Short Fast Long Very Long Analog Delay Ping Pong Bounce
	Delay LCR	Bounce Analog Delay

Category	Effect Type Name	Preset Name
Delay	Delay LR Stereo	Basic Doubling Short
	Delay LR Stereo	Fast Long Very Long Analog Delay
Chorus	G Chorus	Basic Fast Deep Mist Bright
	2Modulator	Basic Fast Deep Mist Multi Panning Mod Vibrator Wonder Shimmer
	SPX Chorus	Basic Fast Deep Slow Flangy
	Symphonic	Basic Fast Deep Slow Analog
	Ensemble Detune	Basic Soft Wide Deep Wide Stereo Sim
Flanger	VCM Flanger	Basic Deep Mod1 Deep Mod2 Mad Mod
	Classic Flanger	Basic Flange Chorus Psychedelic Jet
	Tempo Flanger	Deep Mod Flange Chorus Metallic Psychedelic Jet
	Dynamic Flanger	Follow Reverse Distorted Sync
Phaser	VCM Phaser Mono	E.Piano Orange90 Two Phase Deep Six Deep Eight Lite Eight Deep Sweeper Orange100 Red Twelve Blue Sixteen Clavi1 Clavi2 E.Guitar1 E.Guitar2 E.Guitar3 Vibrato1 Vibrato2 Vibrato3 Ambience1 Ambience2
	VCM Phaser Stereo	Deep Sweeper E.Piano1 E.Piano2 Clavi1 Clavi2 E.Guitar1 E.Guitar2 E.Guitar3 Deep Six Deep Eight Vibrato1
	VCM Phaser Stereo	Vibrato2 Vibrato3 Ambience1 Ambience2

Category	Effect Type Name	Preset Name
Phaser	Tempo Phaser	Basic Deep Phase
	Dynamic Phaser	Follow Reverse Light
Tremolo&Rotary	Auto Pan	E.Piano Smooth Oval Right Turn Super Slow
	Tremolo	Fast Slow Super Fast Stereo Vibrato Spring Relax
	Rotary Speaker	Basic Horn Mic Light Heavy Rotor Fast First
Distortion	Amp Simulator1	Stack1 Stack2 Twin Boost Old Amp Transistor Modern US-Clean J-Clean Fuzz Small Blues Buzzy Bottom Beat Crunch Beat Drive
	Amp Simulator2	Stack1 Stack2 Combo Crunch Hi Gain British Tube Drive Tube Clean
	Comp Distortion	Basic Booster School Boy Detroit Long Lead 80s Clean
	Comp Distortion Delay	Hard1 Hard2 Grunge Voodoo Texas Rockabilly LA Session Thin Techno
Guitar Efx*	US Combo*	Twin Rich Clean Thin Clean Crunch
	Jazz Combo*	Basic Warm Chorus
	US High Gain*	Dirty Riff Burn Solo
	British Lead*	Dirty Drive Gainer Hard
	Multi FX*	Distortion Solo Distortion Basic Overdrive Chorus Crunch Wah Oldies Delay Vintage Echo
	Small Stereo*	Distortion Overdrive Vintage Amp Heavy Dist
	British Combo*	Classic Top Boost Custom Heavy

Category	Effect Type Name	Preset Name
Guitar Efx*	British Legend*	Blues Heavy1 Heavy2 Clean Dirty Clean
Compressor	VCM Compressor 376	Basic Comp Sustainer 60s DrumKit Natural Kick Old Piano Valve Tone Bass Hard Basic Fast Atk + Boost Soft Atk + Boost Attack & Tight Hard Atk + Boost Vocal Comp 117x Unplugged Attack Comp Punchy Master Pinched
	Classic Compressor	Basic Attack For Vintage Keys Pack Comp Gate Tight Pop Rhythm Cutting Comp Basic Bass Old Record Piano
	Multi Band Comp	Basic Maximizer Wild Attacky Hard Hip Club Slap Bass(ch)
Wah	VCM Auto Wah	Low High For Bass
	VCM Touch Wah	Follow Hi Q For Bass Reverse
	VCM Pedal Wah	Low High
Lo-Fi	Lo-Fi	Lo-Fi Old Phone Overload Max Lo-Fi
	Noisy	Noisy Tremolo Noise Fuzz Noise
	Digital Turntable	Old Record1 Old Record2 Short Wave Radio
Tech	Ring Modulator	Basic Slow Tremolo Crazy
	Dynamic Ring Modulator	Basic Metallic Sputter Sharp Edge
	Dynamic Filter	Basic HiPass LoPass Squish
	Auto Synth	Echo Space Walking Robot Delay
	Isolator	Mid Only Near Flat
	Slice	Slice Beat 8th Pan 16th Mute Rock
	Tec Modulation	Star Train Numerator Active Dist Astonish Drift Armor

Category	Effect Type Name	Preset Name
MISC	VCM EQ 501	Flat Radio Speaker Dance Bd & Sn
	Harmonic Enhancer	Edge Hi Edge Mid Edge
	Talking Modulator	Basic
	Damper Resonance	Basic
	Pitch Change	Detune Oct Echo Octaver Plus 4th Minus 4th Oval Step Up Step Down
	Early Reflections	Close Far Reverse Gate 70s Gate

Effect Data Assign Table

* OS V1.50 or later

Table 1
LFO Frequency

Data	Value	Data	Value
0	0	64	2.69
1	0.04	65	2.78
2	0.08	66	2.86
3	0.13	67	2.94
4	0.17	68	3.03
5	0.21	69	3.11
6	0.25	70	3.2
7	0.29	71	3.28
8	0.34	72	3.37
9	0.38	73	3.45
10	0.42	74	3.53
11	0.46	75	3.62
12	0.51	76	3.7
13	0.55	77	3.87
14	0.59	78	4.04
15	0.63	79	4.21
16	0.67	80	4.37
17	0.72	81	4.54
18	0.76	82	4.71
19	0.8	83	4.88
20	0.84	84	5.05
21	0.88	85	5.22
22	0.93	86	5.38
23	0.97	87	5.55
24	1.01	88	5.72
25	1.05	89	6.06
26	1.09	90	6.39
27	1.14	91	6.73
28	1.18	92	7.07
29	1.22	93	7.4
30	1.26	94	7.74
31	1.3	95	8.08
32	1.35	96	8.41
33	1.39	97	8.75
34	1.43	98	9.08
35	1.47	99	9.42
36	1.51	100	9.76
37	1.56	101	10.1
38	1.6	102	10.8
39	1.64	103	11.4
40	1.68	104	12.1
41	1.72	105	12.8
42	1.77	106	13.5
43	1.81	107	14.1
44	1.85	108	14.8
45	1.89	109	15.5
46	1.94	110	16.2
47	1.98	111	16.8
48	2.02	112	17.5
49	2.06	113	18.2
50	2.1	114	19.5
51	2.15	115	20.9
52	2.19	116	22.2
53	2.23	117	23.6
54	2.27	118	24.9
55	2.31	119	26.2
56	2.36	120	27.6
57	2.4	121	28.9
58	2.44	122	30.3
59	2.48	123	31.6
60	2.52	124	33
61	2.57	125	34.3
62	2.61	126	37
63	2.65	127	39.7

Table 2
Modulation Delay Offset

Data	Value	Data	Value
0	0	64	6.4
1	0.1	65	6.5
2	0.2	66	6.6
3	0.3	67	6.7
4	0.4	68	6.8
5	0.5	69	6.9
6	0.6	70	7
7	0.7	71	7.1
8	0.8	72	7.2
9	0.9	73	7.3
10	1	74	7.4
11	1.1	75	7.5
12	1.2	76	7.6
13	1.3	77	7.7
14	1.4	78	7.8
15	1.5	79	7.9
16	1.6	80	8
17	1.7	81	8.1
18	1.8	82	8.2
19	1.9	83	8.3
20	2	84	8.4
21	2.1	85	8.5
22	2.2	86	8.6
23	2.3	87	8.7
24	2.4	88	8.8
25	2.5	89	8.9
26	2.6	90	9
27	2.7	91	9.1
28	2.8	92	9.2
29	2.9	93	9.3
30	3	94	9.4
31	3.1	95	9.5
32	3.2	96	9.6
33	3.3	97	9.7
34	3.4	98	9.8
35	3.5	99	9.9
36	3.6	100	10
37	3.7	101	11.1
38	3.8	102	12.2
39	3.9	103	13.3
40	4	104	14.4
41	4.1	105	15.5
42	4.2	106	17.1
43	4.3	107	18.6
44	4.4	108	20.2
45	4.5	109	21.8
46	4.6	110	23.3
47	4.7	111	24.9
48	4.8	112	26.5
49	4.9	113	28
50	5	114	29.6
51	5.1	115	31.2
52	5.2	116	32.8
53	5.3	117	34.3
54	5.4	118	35.9
55	5.5	119	37.5
56	5.6	120	39
57	5.7	121	40.6
58	5.8	122	42.2
59	5.9	123	43.7
60	6	124	45.3
61	6.1	125	46.9
62	6.2	126	48.4
63	6.3	127	50

Table 3
EQ F

Data	Value
0	THRU (20)
1	22
2	25
3	28
4	32
5	36
6	40
7	45
8	50
9	56
10	63
11	70
12	80
13	90
14	100
15	110
16	125
17	140
18	160
19	180
20	200
21	225
22	250
23	280
24	315
25	355
26	400
27	450
28	500
29	560
30	630
31	700
32	800
33	900
34	1.0k
35	1.1k
36	1.2k
37	1.4k
38	1.6k
39	1.8k
40	2.0k
41	2.2k
42	2.5k
43	2.8k
44	3.2k
45	3.6k
46	4.0k
47	4.5k
48	5.0k
49	5.6k
50	6.3k
51	7.0k
52	8.0k
53	9.0k
54	10.0k
55	11.0k
56	12.0k
57	14.0k
58	16.0k
59	18.0k
60	THRU (20.0k) frequency

Table 4
Reverb Time

Data	Value
0	0.3
1	0.4
2	0.5
3	0.6
4	0.7
5	0.8
6	0.9
7	1
8	1.1
9	1.2
10	1.3
11	1.4
12	1.5
13	1.6
14	1.7
15	1.8
16	1.9
17	2
18	2.1
19	2.2
20	2.3
21	2.4
22	2.5
23	2.6
24	2.7
25	2.8
26	2.9
27	3
28	3.1
29	3.2
30	3.3
31	3.4
32	3.5
33	3.6
34	3.7
35	3.8
36	3.9
37	4
38	4.1
39	4.2
40	4.3
41	4.4
42	4.5
43	4.6
44	4.7
45	4.8
46	4.9
47	5
48	5.5
49	6
50	6.5
51	7
52	7.5
53	8
54	8.5
55	9
56	9.5
57	10
58	11
59	12
60	13
61	14
62	15
63	16
64	17
65	18
66	19
67	20
68	25
69	30

Table 5
Delay Time (0.1–200.0 [ms]

Data	Value	Data	Value
0	0.1	64	100.8
1	1.7	65	102.4
2	3.2	66	104
3	4.8	67	105.6
4	6.4	68	107.1
5	8	69	108.7
6	9.5	70	110.3
7	11.1	71	111.9
8	12.7	72	113.4
9	14.3	73	115
10	15.8	74	116.6
11	17.4	75	118.2
12	19	76	119.7
13	20.6	77	121.3
14	22.1	78	122.9
15	23.7	79	124.4
16	25.3	80	126
17	26.9	81	127.6
18	28.4	82	129.2
19	30	83	130.7
20	31.6	84	132.3
21	33.2	85	133.9
22	34.7	86	135.5
23	36.3	87	137
24	37.9	88	138.6
25	39.5	89	140.2
26	41	90	141.8
27	42.6	91	143.3
28	44.2	92	144.9
29	45.7	93	146.5
30	47.3	94	148.1
31	48.9	95	149.6
32	50.5	96	151.2
33	52	97	152.8
34	53.6	98	154.4
35	55.2	99	155.9
36	56.8	100	157.5
37	58.3	101	159.1
38	59.9	102	160.6
39	61.5	103	162.2
40	63.1	104	163.8
41	64.6	105	165.4
42	66.2	106	166.9
43	67.8	107	168.5
44	69.4	108	170.1
45	70.9	109	171.7
46	72.5	110	173.2
47	74.1	111	174.8
48	75.7	112	176.4
49	77.2	113	178
50	78.8	114	179.5
51	80.4	115	181.1
52	81.9	116	182.7
53	83.5	117	184.3
54	85.1	118	185.8
55	86.7	119	187.4
56	88.2	120	189
57	89.8	121	190.6
58	91.4	122	192.1
59	93	123	193.7
60	94.5	124	195.3
61	96.1	125	196.9
62	97.7	126	198.4
63	99.3	127	200

Table 6
Room Size

Data	Value	Data	Value
0	0.1	64	10.1
1	0.3	65	10.3
2	0.4	66	10.4
3	0.6	67	10.6
4	0.7	68	10.8
5	0.9	69	10.9
6	1	70	11.1
7	1.2	71	11.2
8	1.4	72	11.4
9	1.5	73	11.5
10	1.7	74	11.7
11	1.8	75	11.9
12	2	76	12
13	2.1	77	12.2
14	2.3	78	12.3
15	2.5	79	12.5
16	2.6	80	12.6
17	2.8	81	12.8
18	2.9	82	12.9
19	3.1	83	13.1
20	3.2	84	13.3
21	3.4	85	13.4
22	3.5	86	13.6
23	3.7	87	13.7
24	3.9	88	13.9
25	4	89	14
26	4.2	90	14.2
27	4.3	91	14.4
28	4.5	92	14.5
29	4.6	93	14.7
30	4.8	94	14.8
31	5	95	15
32	5.1	96	15.1
33	5.3	97	15.3
34	5.4	98	15.5
35	5.6	99	15.6
36	5.7	100	15.8
37	5.9	101	15.9
38	6.1	102	16.1
39	6.2	103	16.2
40	6.4	104	16.4
41	6.5	105	16.6
42	6.7	106	16.7
43	6.8	107	16.9
44	7	108	17
45	7.2	109	17.2
46	7.3	110	17.3
47	7.5	111	17.5
48	7.6	112	17.6
49	7.8	113	17.8
50	7.9	114	18
51	8.1	115	18.1
52	8.2	116	18.3
53	8.4	117	18.4
54	8.6	118	18.6
55	8.7	119	18.7
56	8.9	120	18.9
57	9	121	19.1
58	9.2	122	19.2
59	9.3	123	19.4
60	9.5	124	19.5
61	9.7	125	19.7
62	9.8	126	19.8
63	10	127	20

Table 7
Delay Time (0.1 – 400.0 [ms])

Data	Value	Data	Value
0	0.1	64	201.6
1	3.2	65	204.8
2	6.4	66	207.9
3	9.5	67	211.1
4	12.7	68	214.2
5	15.8	69	217.4
6	19	70	220.5
7	22.1	71	223.7
8	25.3	72	226.8
9	28.4	73	230
10	31.6	74	233.1
11	34.7	75	236.3
12	37.9	76	239.4
13	41	77	242.6
14	44.2	78	245.7
15	47.3	79	248.9
16	50.5	80	252
17	53.6	81	255.2
18	56.8	82	258.3
19	59.9	83	261.5
20	63.1	84	264.6
21	66.2	85	267.7
22	69.4	86	270.9
23	72.5	87	274
24	75.7	88	277.2
25	78.8	89	280.3
26	82	90	283.5
27	85.1	91	286.6
28	88.3	92	289.8
29	91.4	93	292.9
30	94.6	94	296.1
31	97.7	95	299.2
32	100.9	96	302.4
33	104	97	305.5
34	107.2	98	308.7
35	110.3	99	311.8
36	113.5	100	315
37	116.6	101	318.1
38	119.8	102	321.3
39	122.9	103	324.4
40	126.1	104	327.6
41	129.2	105	330.7
42	132.4	106	333.9
43	135.5	107	337
44	138.6	108	340.2
45	141.8	109	343.3
46	144.9	110	346.5
47	148.1	111	349.6
48	151.2	112	352.8
49	154.4	113	355.9
50	157.5	114	359.1
51	160.7	115	362.2
52	163.8	116	365.4
53	167	117	368.5
54	170.1	118	371.7
55	173.3	119	374.8
56	176.4	120	378
57	179.6	121	381.1
58	182.7	122	384.3
59	185.9	123	387.4
60	189	124	390.6
61	192.2	125	393.7
62	195.3	126	396.9
63	198.5	127	400

Table 8
Compressor Attack Time

Data	Value
0	1
1	2
2	3
3	4
4	5
5	6
6	7
7	8
8	9
9	10
10	12
11	14
12	16
13	18
14	20
15	23
16	26
17	30
18	35
19	40
20	50
21	60
22	70
23	80
24	100
25	120
26	140
27	160
28	180
29	200

Table 9
Compressor Release Time

Data	Value
0	10
1	15
2	25
3	35
4	45
5	55
6	65
7	75
8	85
9	100
10	115
11	140
12	170
13	230
14	340
15	680
16	850
17	1000
18	1200
19	1500
20	1700
21	2000
22	2400
23	3000

Table 10
Compressor Ratio

Data	Value
0	1
1	1.5
2	2
3	3
4	5
5	7
6	10
7	20

Table 11
Reverb Width; Depth; Height

Data	Value	Data	Value
0	0.5	64	17.6
1	0.8	65	17.9
2	1	66	18.2
3	1.3	67	18.5
4	1.5	68	18.8
5	1.8	69	19.1
6	2	70	19.4
7	2.3	71	19.7
8	2.6	72	20
9	2.8	73	20.2
10	3.1	74	20.5
11	3.3	75	20.8
12	3.6	76	21.1
13	3.9	77	21.4
14	4.1	78	21.7
15	4.4	79	22
16	4.6	80	22.4
17	4.9	81	22.7
18	5.2	82	23
19	5.4	83	23.3
20	5.7	84	23.6
21	5.9	85	23.9
22	6.2	86	24.2
23	6.5	87	24.5
24	6.7	88	24.9
25	7	89	25.2
26	7.2	90	25.5
27	7.5	91	25.8
28	7.8	92	26.1
29	8	93	26.5
30	8.3	94	26.8
31	8.6	95	27.1
32	8.8	96	27.5
33	9.1	97	27.8
34	9.4	98	28.1
35	9.6	99	28.5
36	9.9	100	28.8
37	10.2	101	29.2
38	10.4	102	29.5
39	10.7	103	29.9
40	11	104	30.2
41	11.2		
42	11.5		
43	11.8		
44	12.1		
45	12.3		
46	12.6		
47	12.9		
48	13.1		
49	13.4		
50	13.7		
51	14		
52	14.2		
53	14.5		
54	14.8		
55	15.1		
56	15.4		
57	15.6		
58	15.9		
59	16.2		
60	16.5		
61	16.8		
62	17.1		
63	17.3		

Table 12
Wah Release Time

Data	Value
52	10
53	15
54	25
55	35
56	45
57	55
58	65
59	75
60	85
61	100
62	115
63	140
64	170
65	230
66	340
67	680

Table 13
LO-FI Sampling Frequency Control

Data	Value	Data	Value
0	44.1k	64	678.5
1	22.1k	65	668.2
2	14.7k	66	658.2
3	11.0k	67	648.5
4	8.82k	68	639.1
5	7.35k	69	630
6	6.30k	70	621.1
7	5.51k	71	612.5
8	4.90k	72	604.1
9	4.41k	73	595.9
10	4.01k	74	588
11	3.68k	75	580.3
12	3.39k	76	572.7
13	3.15k	77	565.4
14	2.94k	78	558.2
15	2.76k	79	551.3
16	2.59k	80	544.4
17	2.45k	81	537.8
18	2.32k	82	531.3
19	2.21k	83	525
20	2.10k	84	518.8
21	2.00k	85	512.8
22	1.92k	86	506.9
23	1.84k	87	501.1
24	1.76k	88	495.5
25	1.70k	89	490
26	1.63k	90	484.6
27	1.58k	91	479.3
28	1.52k	92	474.2
29	1.47k	93	469.1
30	1.42k	94	464.2
31	1.38k	95	459.4
32	1.34k	96	454.6
33	1.30k	97	450
34	1.26k	98	445.5
35	1.23k	99	441
36	1.19k	100	436.6
37	1.16k	101	432.4
38	1.13k	102	428.2
39	1.10k	103	424
40	1.08k	104	420
41	1.05k	105	416
42	1.03k	106	412.1
43	1.00k	107	408.3
44	980	108	404.6
45	958.7	109	400.9
46	938.3	110	397.3
47	918.8	111	393.8
48	900	112	390.3
49	882	113	386.8
50	864.7	114	383.5
51	848.1	115	380.2
52	832.1	116	376.9
53	816.7	117	373.7
54	801.8	118	370.6
55	787.5	119	367.5
56	773.7	120	364.5
57	760.3	121	361.5
58	747.5	122	358.5
59	735	123	355.6
60	723	124	352.8
61	711.3	125	350
62	700	126	347.2
63	689.1	127	344.5

Table 14
Tempo

Data	Value
0	32nd/3
1	64th.
2	32nd
3	16th/3
4	32nd.
5	16th
6	8th/3
7	16th.
8	8th
9	4th/3
10	8th.
11	4th
12	2nd/3
13	4th.
14	2nd
15	Whole/3
16	2nd.
17	4thX4
18	4thX5
19	4thX6
20	4thX7
21	4thX8
22	4thX9
23	4thX10
24	4thX11
25	4thX12
26	4thX13
27	4thX14
28	4thX15
29	4thX16

Table 15
Multi Compressor Gain (dB)

Data	Value	Data	Value
0	-×	29	-8
1	-60	30	-7
2	-57	31	-6
3	-54	32	-5
4	-51	33	-4
5	-48	34	-3
6	-45	35	-2
7	-42	36	-1
8	-39	37	0
9	-36	38	1
10	-33	39	2
11	-30	40	3
12	-27	41	4
13	-24	42	5
14	-23	43	6
15	-22	44	7
16	-21	45	8
17	-20	46	9
18	-19	47	10
19	-18	48	11
20	-17	49	12
21	-16	50	13
22	-15	51	14
23	-14	52	15
24	-13	53	16
25	-12	54	17
26	-11	55	18
27	-10		
28	-9		

Table 16
Divide Frequency (Hz)

Data	Value1	Value2	Data	Value1	Value2
0	32	1.2k	64	315	3.2k
1	32	1.6k	65	315	4.0k
2	32	2.0k	66	315	5.0k
3	32	2.5k	67	315	6.3k
4	32	3.2k	68	315	8.0k
5	32	4.0k	69	315	10.0k
6	32	5.0k	70	500	1.2k
7	32	6.3k	71	500	1.6k
8	32	8.0k	72	500	2.0k
9	32	10.0k	73	500	2.5k
10	63	1.2k	74	500	3.2k
11	63	1.6k	75	500	4.0k
12	63	2.0k	76	500	5.0k
13	63	2.5k	77	500	6.3k
14	63	3.2k	78	500	8.0k
15	63	4.0k	79	500	10.0k
16	63	5.0k	80	630	1.2k
17	63	6.3k	81	630	1.6k
18	63	8.0k	82	630	2.0k
19	63	10.0k	83	630	2.5k
20	80	1.2k	84	630	3.2k
21	80	1.6k	85	630	4.0k
22	80	2.0k	86	630	5.0k
23	80	2.5k	87	630	6.3k
24	80	3.2k	88	630	8.0k
25	80	4.0k	89	630	10.0k
26	80	5.0k			
27	80	6.3k			
28	80	8.0k			
29	80	10.0k			
30	125	1.2k			
31	125	1.6k			
32	125	2.0k			
33	125	2.5k			
34	125	3.2k			
35	125	4.0k			
36	125	5.0k			
37	125	6.3k			
38	125	8.0k			
39	125	10.0k			
40	160	1.2k			
41	160	1.6k			
42	160	2.0k			
43	160	2.5k			
44	160	3.2k			
45	160	4.0k			
46	160	5.0k			
47	160	6.3k			
48	160	8.0k			
49	160	10.0k			
50	250	1.2k			
51	250	1.6k			
52	250	2.0k			
53	250	2.5k			
54	250	3.2k			
55	250	4.0k			
56	250	5.0k			
57	250	6.3k			
58	250	8.0k			
59	250	10.0k			
60	315	1.2k			
61	315	1.6k			
62	315	2.0k			
63	315	2.5k			

Table 17
Dyna Attack Time (ms)

Data	Value	Data	Value
0	0.3	64	112
1	0.9	65	114
2	1.8	66	116
3	2.7	67	118
4	3.6	68	120
5	5.4	69	121
6	7.2	70	123
7	9	71	125
8	10	72	127
9	12	73	129
10	14	74	130
11	16	75	132
12	18	76	134
13	20	77	136
14	21	78	138
15	23	79	140
16	25	80	141
17	27	81	143
18	29	82	145
19	30	83	147
20	32	84	149
21	34	85	150
22	36	86	152
23	38	87	154
24	40	88	156
25	41	89	158
26	43	90	160
27	45	91	161
28	47	92	163
29	49	93	165
30	50	94	167
31	52	95	169
32	54	96	170
33	56	97	172
34	58	98	174
35	60	99	176
36	61	100	178
37	63	101	180
38	65	102	181
39	67	103	183
40	69	104	185
41	70	105	187
42	72	106	189
43	74	107	190
44	76	108	192
45	78	109	194
46	80	110	196
47	81	111	198
48	83	112	200
49	85	113	201
50	87	114	203
51	89	115	205
52	90	116	207
53	92	117	209
54	94	118	210
55	96	119	212
56	98	120	214
57	100	121	216
58	101	122	218
59	103	123	220
60	105	124	221
61	107	125	223
62	109	126	225
63	110	127	227

Table 18
Dyna Release Time (ms)

Data	Value	Data	Value
0	2.6	64	369
1	3	65	391
2	3.4	66	413
3	3.9	67	434
4	4.3	68	456
5	4.7	69	478
6	5.2	70	499
7	5.6	71	521
8	6	72	543
9	6.5	73	565
10	6.9	74	586
11	7.3	75	608
12	7.8	76	630
13	8.2	77	651
14	8.6	78	673
15	13	79	695
16	17	80	717
17	22	81	738
18	26	82	760
19	30	83	782
20	35	84	803
21	39	85	825
22	43	86	847
23	48	87	869
24	52	88	890
25	56	89	912
26	61	90	934
27	65	91	955
28	69	92	977
29	74	93	999
30	78	94	1021
31	83	95	1042
32	87	96	1064
33	91	97	1086
34	96	98	1107
35	100	99	1129
36	104	100	1151
37	109	101	1173
38	113	102	1194
39	117	103	1216
40	122	104	1238
41	126	105	1259
42	130	106	1281
43	135	107	1303
44	139	108	1346
45	143	109	1390
46	148	110	1433
47	152	111	1477
48	156	112	1520
49	161	113	1563
50	165	114	1607
51	169	115	1650
52	174	116	1694
53	178	117	1737
54	182	118	1781
55	187	119	1824
56	195	120	1867
57	217	121	1911
58	239	122	1954
59	261	123	1998
60	282	124	2041
61	304	125	2085
62	326	126	2128
63	347	127	2171

Table 19
Ring Mod OSC Freq Coarse (Hz)

Data	Value	Data	Value
0	0.5	64	151
1	1.5	65	160
2	2	66	169
3	2.5	67	179
4	3.5	68	189
5	4	69	200
6	4.5	70	211
7	5.5	71	223
8	6	72	236
9	6.5	73	249
10	7.5	74	264
11	8	75	279
12	8.4	76	295
13	8.9	77	311
14	9.4	78	329
15	9.9	79	348
16	10.5	80	368
17	11.1	81	389
18	11.7	82	411
19	12.4	83	435
20	13.1	84	459
21	13.9	85	486
22	14.7	86	513
23	15.5	87	543
24	16.4	88	574
25	17.3	89	607
26	18.3	90	641
27	19.4	91	678
28	20.5	92	717
29	21.7	93	757
30	22.9	94	801
31	24.2	95	846
32	25.6	96	895
33	27.1	97	946
34	28.6	98	1.00k
35	30.3	99	1.05k
36	32	100	1.11k
37	33.8	101	1.18k
38	35.8	102	1.24k
39	37.8	103	1.32k
40	40	104	1.39k
41	42.2	105	1.47k
42	44.7	106	1.55k
43	47.2	107	1.64k
44	49.9	108	1.74k
45	52.7	109	1.84k
46	55.8	110	1.94k
47	58.9	111	2.05k
48	62.3	112	2.17k
49	65.9	113	2.29k
50	69.6	114	2.43k
51	73.6	115	2.56k
52	77.8	116	2.71k
53	82.3	117	2.87k
54	87	118	3.03k
55	91.9	119	3.20k
56	97.2	120	3.39k
57	102	121	3.58k
58	108	122	3.79k
59	114	123	4.00k
60	121	124	4.23k
61	128	125	4.47k
62	135	126	4.73k
63	143	127	5.00k

Table 20
V-Flanger Delay Offset

Data	Value	Data	Value
0	0.09	70	6.35
1	0.11	71	6.67
2	0.13	72	7.01
3	0.15	73	7.37
4	0.18	74	7.74
5	0.2	75	8.13
6	0.22	76	8.54
7	0.24	77	8.97
8	0.27	78	9.41
9	0.29	79	9.85
10	0.31	80	10.29
11	0.34	81	10.73
12	0.36	82	11.17
13	0.38	83	11.61
14	0.4	84	12.05
15	0.42	85	12.49
16	0.43	86	12.93
17	0.46	87	13.37
18	0.48	88	13.81
19	0.51	89	14.24
20	0.53	90	14.68
21	0.56	91	15.12
22	0.59	92	15.56
23	0.62	93	16
24	0.65	94	16.44
25	0.68	95	16.88
26	0.72	96	17.32
27	0.76	97	17.76
28	0.79	98	18.2
29	0.83	99	18.64
30	0.88	100	19.08
31	0.92	101	19.52
32	0.97	102	19.96
33	1.02	103	20.4
34	1.07	104	20.83
35	1.12	105	21.27
36	1.18	106	21.71
37	1.24	107	22.15
38	1.3	108	22.59
39	1.37	109	23.03
40	1.44	110	23.47
41	1.51	111	23.91
42	1.59	112	24.35
43	1.67	113	24.79
44	1.76	114	25.23
45	1.84	115	25.66
46	1.94	116	26.1
47	2.04	117	26.54
48	2.14	118	26.98
49	2.25	119	27.42
50	2.36	120	27.86
51	2.48	121	28.3
52	2.61	122	28.74
53	2.74	123	29.18
54	2.88	124	29.62
55	3.03	125	30.06
56	3.18	126	30.5
57	3.34	127	30.94
58	3.51	128	31.38
59	3.69	129	31.82
60	3.87	130	32.25
61	4.07	131	32.69
62	4.28	132	33.13
63	4.49	133	33.57
64	4.72	134	34.01
65	4.96	135	34.45
66	5.21	136	34.89
67	5.47	137	35.33
68	5.75	138	35.77
69	6.04	139	36.21

Table 21
Modulation Phase

Data	Value
0	-180
1	-158
2	-135
3	-113
4	-90
5	-68
6	-45
7	-23
8	0
9	23
10	45
11	68
12	90
13	113
14	135
15	158
16	180

Table 22
VCM Flanger Speed

Data	Value	Data	Value	Data	Value	Data	Value
0	0.04	70	0.281	140	1.272	210	5.804
1	0.042	71	0.287	141	1.304	211	5.972
2	0.045	72	0.292	142	1.335	212	6.056
3	0.047	73	0.3	143	1.367	213	6.224
4	0.05	74	0.308	144	1.409	214	6.309
5	0.053	75	0.313	145	1.43	215	6.477
6	0.055	76	0.321	146	1.451	216	6.645
7	0.058	77	0.326	147	1.493	217	6.813
8	0.06	78	0.334	148	1.514	218	6.897
9	0.063	79	0.342	149	1.556	219	7.066
10	0.066	80	0.347	150	1.577	220	7.234
11	0.068	81	0.357	151	1.619	221	7.402
12	0.071	82	0.363	152	1.661	222	7.57
13	0.074	83	0.373	153	1.682	223	7.738
14	0.076	84	0.379	154	1.724	224	7.907
15	0.079	85	0.389	155	1.766	225	8.075
16	0.081	86	0.4	156	1.808	226	8.243
17	0.084	87	0.405	157	1.851	227	8.411
18	0.087	88	0.415	158	1.893	228	8.58
19	0.089	89	0.426	159	1.935	229	8.748
20	0.092	90	0.431	160	1.977	230	9
21	0.095	91	0.442	161	2.019	231	9.168
22	0.097	92	0.452	162	2.061	232	9.337
23	0.1	93	0.463	163	2.103	233	9.589
24	0.102	94	0.473	164	2.145	234	9.757
25	0.105	95	0.484	165	2.187	235	10
26	0.108	96	0.494	166	2.25		
27	0.11	97	0.505	167	2.292		
28	0.113	98	0.515	168	2.334		
29	0.116	99	0.526	169	2.397		
30	0.118	100	0.536	170	2.46		
31	0.121	101	0.547	171	2.502		
32	0.124	102	0.563	172	2.565		
33	0.126	103	0.573	173	2.608		
34	0.129	104	0.589	174	2.671		
35	0.131	105	0.599	175	2.733		
36	0.134	106	0.615	176	2.776		
37	0.137	107	0.626	177	2.86		
38	0.139	108	0.636	178	2.902		
39	0.145	109	0.652	179	2.986		
40	0.147	110	0.668	180	3.028		
41	0.15	111	0.683	181	3.112		
42	0.152	112	0.704	182	3.154		
43	0.158	113	0.715	183	3.238		
44	0.16	114	0.725	184	3.323		
45	0.163	115	0.747	185	3.365		
46	0.168	116	0.757	186	3.449		
47	0.171	117	0.778	187	3.533		
48	0.173	118	0.789	188	3.617		
49	0.179	119	0.81	189	3.701		
50	0.181	120	0.831	190	3.785		
51	0.187	121	0.852	191	3.869		
52	0.189	122	0.862	192	3.953		
53	0.195	123	0.883	193	4.037		
54	0.197	124	0.904	194	4.122		
55	0.202	125	0.925	195	4.206		
56	0.208	126	0.946	196	4.29		
57	0.21	127	0.967	197	4.374		
58	0.216	128	0.988	198	4.5		
59	0.221	129	1.009	199	4.584		
60	0.226	130	1.03	200	4.668		
61	0.231	131	1.051	201	4.752		
62	0.237	132	1.072	202	4.879		
63	0.242	133	1.093	203	5.005		
64	0.247	134	1.125	204	5.131		
65	0.252	135	1.146	205	5.215		
66	0.258	136	1.167	206	5.341		
67	0.263	137	1.199	207	5.467		
68	0.268	138	1.22	208	5.552		
69	0.273	139	1.251	209	5.72		

Table 23
VCM Phaser Speed

Data	Value	Data	Value	Data	Value	Data	Value
0	0.1	70	0.373	140	1.325	210	4.668
1	0.103	71	0.379	141	1.346	211	4.752
2	0.105	72	0.389	142	1.367	212	4.837
3	0.108	73	0.394	143	1.41	213	4.921
4	0.11	74	0.4	144	1.43	214	5.047
5	0.113	75	0.41	145	1.451	215	5.131
6	0.116	76	0.415	146	1.472	216	5.215
7	0.118	77	0.426	147	1.493	217	5.299
8	0.121	78	0.431	148	1.535	218	5.383
9	0.124	79	0.442	149	1.556	219	5.551
10	0.126	80	0.447	150	1.577	220	5.636
11	0.129	81	0.457	151	1.619	221	5.72
12	0.131	82	0.463	152	1.64	222	5.804
13	0.134	83	0.473	153	1.682	223	5.888
14	0.137	84	0.478	154	1.703	224	6.056
15	0.139	85	0.489	155	1.724	225	6.14
16	0.142	86	0.499	156	1.767	226	6.224
17	0.145	87	0.51	157	1.808	227	6.393
18	0.147	88	0.515	158	1.829	228	6.477
19	0.15	89	0.526	159	1.872	229	6.561
20	0.152	90	0.536	160	1.893	230	6.729
21	0.155	91	0.547	161	1.935	231	6.813
22	0.158	92	0.557	162	1.977	232	6.981
23	0.16	93	0.568	163	2	233	7.066
24	0.163	94	0.578	164	2.04	234	7.234
25	0.166	95	0.589	165	2.082	235	7.318
26	0.168	96	0.599	166	2.124	236	7.486
27	0.171	97	0.61	167	2.145	237	7.654
28	0.173	98	0.62	168	2.187	238	7.774
29	0.179	99	0.631	169	2.229	239	7.907
30	0.181	100	0.641	170	2.271	240	8.075
31	0.184	101	0.652	171	2.313	241	8.159
32	0.187	102	0.668	172	2.355	242	8.327
33	0.192	103	0.683	173	2.397	243	8.496
34	0.195	104	0.694	174	2.439	244	8.664
35	0.2	105	0.704	175	2.503	245	8.832
36	0.202	106	0.715	176	2.544	246	9
37	0.205	107	0.725	177	2.587	247	9.168
38	0.21	108	0.747	178	2.629	248	9.337
39	0.213	109	0.758	179	2.671	249	9.505
40	0.218	110	0.768	180	2.734	250	9.673
41	0.221	111	0.789	181	2.776	251	9.841
42	0.226	112	0.799	182	2.86	252	10
43	0.229	113	0.81	183	2.902		
44	0.234	114	0.831	184	2.944		
45	0.237	115	0.841	185	2.986		
46	0.242	116	0.862	186	3.028		
47	0.247	117	0.873	187	3.07		
48	0.25	118	0.894	188	3.154		
49	0.255	119	0.904	189	3.196		
50	0.26	120	0.925	190	3.28		
51	0.265	121	0.936	191	3.323		
52	0.271	122	0.957	192	3.365		
53	0.276	123	0.967	193	3.449		
54	0.281	124	0.988	194	3.491		
55	0.287	125	1	195	3.575		
56	0.289	126	1.03	196	3.659		
57	0.294	127	1.051	197	3.701		
58	0.3	128	1.062	198	3.785		
59	0.308	129	1.083	199	3.827		
60	0.31	130	1.104	200	3.911		
61	0.318	131	1.125	201	3.995		
62	0.323	132	1.146	202	4.08		
63	0.329	133	1.167	203	4.122		
64	0.334	134	1.188	204	4.206		
65	0.342	135	1.209	205	4.29		
66	0.347	136	1.23	206	4.374		
67	0.357	137	1.251	207	4.458		
68	0.363	138	1.272	208	4.5		
69	0.368	139	1.304	209	4.584		

Table 24
VCM Wah Speed

Data	Value	Data	Value	Data	Value	Data	Value
0	0.1	70	0.436	140	1.872	210	7.991
1	0.103	71	0.447	141	1.914	211	8.159
2	0.105	72	0.457	142	1.956	212	8.327
3	0.108	73	0.463	143	1.999	213	8.496
4	0.11	74	0.473	144	2.04	214	8.748
5	0.113	75	0.484	145	2.082	215	8.916
6	0.116	76	0.494	146	2.124	216	9.084
7	0.118	77	0.505	147	2.166	217	9.253
8	0.121	78	0.515	148	2.229	218	9.505
9	0.124	79	0.526	149	2.25	219	9.673
10	0.126	80	0.536	150	2.313	220	9.841
11	0.129	81	0.547	151	2.355	221	10.09
12	0.131	82	0.563	152	2.397	222	10.26
13	0.134	83	0.573	153	2.46	223	10.51
14	0.137	84	0.584	154	2.502	224	10.77
15	0.139	85	0.599	155	2.566	225	10.93
16	0.142	86	0.61	156	2.608	226	11.1
17	0.145	87	0.62	157	2.671	227	11.44
18	0.147	88	0.636	158	2.734	228	11.61
19	0.152	89	0.652	159	2.776	229	11.94
20	0.155	90	0.662	160	2.818	230	12.11
21	0.157	91	0.673	161	2.902	231	12.45
22	0.163	92	0.694	162	2.944	232	12.62
23	0.166	93	0.704	163	3.028	233	12.95
24	0.168	94	0.725	164	3.07	234	13.29
25	0.173	95	0.736	165	3.154	235	13.46
26	0.176	96	0.747	166	3.196	236	13.79
27	0.179	97	0.768	167	3.28	237	13.96
28	0.184	98	0.778	168	3.336	238	14.3
29	0.187	99	0.799	169	3.407	239	14.64
30	0.189	100	0.82	170	3.491	240	14.97
31	0.195	101	0.831	171	3.575	241	15.31
32	0.2	102	0.852	172	3.659	242	15.65
33	0.202	103	0.873	173	3.701	243	15.98
34	0.208	104	0.883	174	3.785	244	16.32
35	0.21	105	0.904	175	3.869	245	16.65
36	0.216	106	0.935	176	3.953	246	16.99
37	0.221	107	0.946	177	4.037	247	17.33
38	0.226	108	0.967	178	4.122	248	17.66
39	0.231	109	0.988	179	4.206	249	18
40	0.234	110	0.999	180	4.29	250	18.34
41	0.239	111	1.02	181	4.374	251	18.84
42	0.244	112	1.051	182	4.5	252	19.18
43	0.25	113	1.072	183	4.584	253	19.51
44	0.255	114	1.093	184	4.668	254	20
45	0.26	115	1.115	185	4.795		
46	0.265	116	1.136	186	4.879		
47	0.271	117	1.157	187	4.963		
48	0.276	118	1.188	188	5.09		
49	0.284	119	1.209	189	5.173		
50	0.289	120	1.241	190	5.299		
51	0.294	121	1.262	191	5.383		
52	0.302	122	1.293	192	5.552		
53	0.308	123	1.314	193	5.636		
54	0.315	124	1.346	194	5.72		
55	0.321	125	1.367	195	5.888		
56	0.326	126	1.409	196	5.972		
57	0.334	127	1.43	197	6.14		
58	0.342	128	1.451	198	6.224		
59	0.347	129	1.493	199	6.393		
60	0.357	130	1.514	200	6.477		
61	0.363	131	1.556	201	6.665		
62	0.368	132	1.598	202	6.813		
63	0.379	133	1.619	203	6.897		
64	0.384	134	1.661	204	7.066		
65	0.394	135	1.703	205	7.234		
66	0.405	136	1.724	206	7.402		
67	0.41	137	1.766	207	7.57		
68	0.421	138	1.808	208	7.654		
69	0.426	139	1.851	209	7.823		

Table 25
Rev Hall Time

Data	Value
0	0.3
1	0.4
2	0.5
3	0.6
4	0.7
5	0.8
6	0.9
7	1
8	1.1
9	1.2
10	1.3
11	1.4
12	1.5
13	1.6
14	1.7
15	1.8
16	1.9
17	2
18	2.1
19	2.2
20	2.3
21	2.4
22	2.5
23	2.6
24	2.7
25	2.8
26	2.9
27	3
28	3.1
29	3.2
30	3.3
31	3.4
32	3.5
33	3.6
34	3.7
35	3.8
36	3.9
37	4
38	4.1
39	4.2
40	4.3
41	4.4
42	4.5
43	4.6
44	4.7
45	4.8
46	4.9
47	5
48	5.5
49	6
50	6.5
51	7
52	7.5
53	8
54	8.5
55	9
56	9.5
57	10
58	10.5
59	11
60	11.5
61	12
62	12.5
63	13
64	13.5
65	14
66	15
67	16
68	17
69	18

Table 26
Rev Room Time

Data	Value
0	0.3
1	0.4
2	0.5
3	0.6
4	0.7
5	0.8
6	0.9
7	1
8	1.1
9	1.2
10	1.3
11	1.4
12	1.5
13	1.6
14	1.7
15	1.8
16	1.9
17	2
18	2.1
19	2.2
20	2.3
21	2.4
22	2.5
23	2.6
24	2.7
25	2.8
26	2.9
27	3
28	3.1
29	3.2
30	3.3
31	3.4
32	3.5
33	3.6
34	3.7
35	3.8
36	3.9
37	4
38	4.1
39	4.2
40	4.3
41	4.4
42	4.5
43	4.6
44	4.7
45	4.8
46	4.9
47	5
48	5.1
49	5.2
50	5.3
51	5.4
52	5.5
53	5.6
54	5.7
55	5.8
56	5.9
57	6
58	6.1
59	6.2
60	6.3
61	6.4
62	6.5
63	6.6
64	6.7
65	6.8
66	6.9
67	7
68	8
69	10

Table 27
VCM Comp Level

Data	Value	Data	Value	Data	Value
0	-×dB	67	-28.50dB	134	-10.44dB
1	-138.0dB	68	-28.11dB	135	-10.24dB
2	-120.0dB	69	-27.73dB	136	-10.05dB
3	-109.4dB	70	-27.36dB	137	-9.86dB
4	-101.9dB	71	-26.99dB	138	-9.67dB
5	-96.12dB	72	-26.62dB	139	-9.48dB
6	-91.37dB	73	-26.26dB	140	-9.29dB
7	-87.36dB	74	-25.91dB	141	-9.11dB
8	-83.88dB	75	-25.56dB	142	-8.92dB
9	-80.81dB	76	-25.21dB	143	-8.74dB
10	-78.06dB	77	-24.87dB	144	-8.56dB
11	-75.58dB	78	-24.54dB	145	-8.38dB
12	-73.31dB	79	-24.20dB	146	-8.20dB
13	-71.23dB	80	-23.88dB	147	-8.02dB
14	-69.29dB	81	-23.55dB	148	-7.85dB
15	-67.50dB	82	-23.23dB	149	-7.67dB
16	-65.81dB	83	-22.92dB	150	-7.50dB
17	-64.23dB	84	-22.61dB	151	-7.32dB
18	-62.75dB	85	-22.30dB	152	-7.15dB
19	-61.34dB	86	-21.99dB	153	-6.98dB
20	-60.00dB	87	-21.69dB	154	-6.81dB
21	-58.73dB	88	-21.39dB	155	-6.64dB
22	-57.52dB	89	-21.10dB	156	-6.47dB
23	-56.36dB	90	-20.81dB	157	-6.31dB
24	-55.25dB	91	-20.52dB	158	-6.14dB
25	-54.19dB	92	-20.23dB	159	-5.98dB
26	-53.16dB	93	-19.95dB	160	-5.81dB
27	-52.18dB	94	-19.67dB	161	-5.65dB
28	-51.23dB	95	-19.40dB	162	-5.49dB
29	-50.32dB	96	-19.13dB	163	-5.33dB
30	-49.43dB	97	-18.86dB	164	-5.17dB
31	-48.58dB	98	-18.59dB	165	-5.01dB
32	-47.75dB	99	-18.32dB	166	-4.86dB
33	-46.95dB	100	-18.06dB	167	-4.70dB
34	-46.17dB	101	-17.80dB	168	-4.54dB
35	-45.42dB	102	-17.55dB	169	-4.39dB
36	-44.68dB	103	-17.29dB	170	-4.23dB
37	-43.97dB	104	-17.04dB	171	-4.08dB
38	-43.27dB	105	-16.79dB	172	-3.93dB
39	-42.60dB	106	-16.54dB	173	-3.78dB
40	-41.94dB	107	-16.30dB	174	-3.63dB
41	-41.29dB	108	-16.06dB	175	-3.48dB
42	-40.67dB	109	-15.82dB	176	-3.33dB
43	-40.05dB	110	-15.58dB	177	-3.18dB
44	-39.45dB	111	-15.34dB	178	-3.04dB
45	-38.87dB	112	-15.11dB	179	-2.89dB
46	-38.30dB	113	-14.88dB	180	-2.75dB
47	-37.74dB	114	-14.65dB	181	-2.60dB
48	-37.19dB	115	-14.42dB	182	-2.46dB
49	-36.65dB	116	-14.19dB	183	-2.31dB
50	-36.12dB	117	-13.97dB	184	-2.17dB
51	-35.61dB	118	-13.75dB	185	-2.03dB
52	-35.10dB	119	-13.53dB	186	-1.89dB
53	-34.61dB	120	-13.31dB	187	-1.75dB
54	-34.12dB	121	-13.09dB	188	-1.61dB
55	-33.64dB	122	-12.88dB	189	-1.47dB
56	-33.17dB	123	-12.67dB	190	-1.34dB
57	-32.71dB	124	-12.46dB	191	-1.20dB
58	-32.26dB	125	-12.25dB	192	-1.06dB
59	-31.81dB	126	-12.04dB	193	-0.93dB
60	-31.37dB	127	-11.83dB	194	-0.79dB
61	-30.94dB	128	-11.63dB	195	-0.66dB
62	-30.52dB	129	-11.43dB	196	-0.53dB
63	-30.10dB	130	-11.23dB	197	-0.39dB
64	-29.69dB	131	-11.03dB	198	-0.26dB
65	-29.29dB	132	-10.83dB	199	-0.13dB
66	-28.89dB	133	-10.63dB	200	0.00dB

Table 28
VCM Comp Attack Time

Data	Value	Data	Value	Data	Value
0	0.022ms	67	3.295ms	134	18.53ms
1	0.023ms	68	3.418ms	135	18.88ms
2	0.024ms	69	3.544ms	136	19.23ms
3	0.025ms	70	3.673ms	137	19.59ms
4	0.026ms	71	3.805ms	138	19.95ms
5	0.028ms	72	3.940ms	139	20.31ms
6	0.031ms	73	4.077ms	140	20.68ms
7	0.035ms	74	4.217ms	141	21.05ms
8	0.039ms	75	4.361ms	142	21.42ms
9	0.045ms	76	4.507ms	143	21.80ms
10	0.051ms	77	4.656ms	144	22.18ms
11	0.059ms	78	4.807ms	145	22.57ms
12	0.068ms	79	4.962ms	146	22.96ms
13	0.077ms	80	5.120ms	147	23.36ms
14	0.088ms	81	5.281ms	148	23.75ms
15	0.101ms	82	5.445ms	149	24.16ms
16	0.114ms	83	5.611ms	150	24.56ms
17	0.129ms	84	5.781ms	151	24.97ms
18	0.146ms	85	5.954ms	152	25.39ms
19	0.163ms	86	6.130ms	153	25.81ms
20	0.182ms	87	6.309ms	154	26.23ms
21	0.203ms	88	6.491ms	155	26.66ms
22	0.225ms	89	6.677ms	156	27.09ms
23	0.249ms	90	6.865ms	157	27.53ms
24	0.274ms	91	7.057ms	158	27.97ms
25	0.301ms	92	7.252ms	159	28.41ms
26	0.330ms	93	7.450ms	160	28.86ms
27	0.360ms	94	7.651ms	161	29.31ms
28	0.393ms	95	7.855ms	162	29.77ms
29	0.426ms	96	8.063ms	163	30.23ms
30	0.462ms	97	8.274ms	164	30.70ms
31	0.500ms	98	8.489ms	165	31.17ms
32	0.539ms	99	8.706ms	166	31.64ms
33	0.580ms	100	8.927ms	167	32.12ms
34	0.623ms	101	9.151ms	168	32.60ms
35	0.668ms	102	9.379ms	169	33.09ms
36	0.716ms	103	9.610ms	170	33.58ms
37	0.765ms	104	9.844ms	171	34.07ms
38	0.816ms	105	10.09ms	172	34.57ms
39	0.869ms	106	10.33ms	173	35.08ms
40	0.924ms	107	10.57ms	174	35.59ms
41	0.982ms	108	10.82ms	175	36.10ms
42	1.041ms	109	11.07ms	176	36.62ms
43	1.103ms	110	11.33ms	177	37.14ms
44	1.167ms	111	11.59ms	178	37.67ms
45	1.233ms	112	11.85ms	179	38.20ms
46	1.301ms	113	12.11ms	180	38.73ms
47	1.372ms	114	12.38ms	181	39.27ms
48	1.444ms	115	12.66ms	182	39.82ms
49	1.520ms	116	12.93ms	183	40.36ms
50	1.597ms	117	13.21ms	184	40.92ms
51	1.677ms	118	13.50ms	185	41.48ms
52	1.759ms	119	13.78ms	186	42.04ms
53	1.844ms	120	14.07ms	187	42.61ms
54	1.931ms	121	14.37ms	188	43.18ms
55	2.021ms	122	14.67ms	189	43.75ms
56	2.113ms	123	14.97ms	190	44.33ms
57	2.207ms	124	15.27ms	191	44.92ms
58	2.304ms	125	15.58ms	192	45.51ms
59	2.404ms	126	15.90ms	193	46.10ms
60	2.506ms	127	16.21ms	194	46.70ms
61	2.611ms	128	16.53ms	195	47.31ms
62	2.718ms	129	16.86ms	196	47.91ms
63	2.828ms	130	17.18ms	197	48.53ms
64	2.941ms	131	17.52ms	198	49.15ms
65	3.056ms	132	17.85ms	199	49.77ms
66	3.174ms	133	18.19ms	200	50.40ms

Table 29
VCM Comp Release Time

Data	Value	Data	Value	Data	Value
0	10.88ms	67	70.74ms	134	250.30ms
1	10.90ms	68	72.54ms	135	253.88ms
2	10.94ms	69	74.36ms	136	257.50ms
3	11.00ms	70	76.22ms	137	261.14ms
4	11.10ms	71	78.10ms	138	264.80ms
5	11.22ms	72	80.00ms	139	268.50ms
6	11.36ms	73	81.94ms	140	272.22ms
7	11.54ms	74	83.90ms	141	275.96ms
8	11.74ms	75	85.88ms	142	279.74ms
9	11.96ms	76	87.90ms	143	283.54ms
10	12.22ms	77	89.94ms	144	287.36ms
11	12.50ms	78	92.00ms	145	291.22ms
12	12.80ms	79	94.10ms	146	295.10ms
13	13.14ms	80	96.22ms	147	299.00ms
14	13.50ms	81	98.36ms	148	302.94ms
15	13.88ms	82	100.54ms	149	306.90ms
16	14.30ms	83	102.74ms	150	310.88ms
17	14.74ms	84	104.96ms	151	314.90ms
18	15.20ms	85	107.22ms	152	318.94ms
19	15.70ms	86	109.50ms	153	323.00ms
20	16.22ms	87	111.80ms	154	327.10ms
21	16.76ms	88	114.14ms	155	331.22ms
22	17.34ms	89	116.50ms	156	335.36ms
23	17.94ms	90	118.88ms	157	339.54ms
24	18.56ms	91	121.30ms	158	343.74ms
25	19.22ms	92	123.74ms	159	347.96ms
26	19.90ms	93	126.20ms	160	352.22ms
27	20.60ms	94	128.70ms	161	356.50ms
28	21.34ms	95	131.22ms	162	360.80ms
29	22.10ms	96	133.76ms	163	365.14ms
30	22.88ms	97	136.34ms	164	369.50ms
31	23.70ms	98	138.94ms	165	373.88ms
32	24.54ms	99	141.56ms	166	378.30ms
33	25.40ms	100	144.22ms	167	382.74ms
34	26.30ms	101	146.90ms	168	387.20ms
35	27.22ms	102	149.60ms	169	391.70ms
36	28.16ms	103	152.34ms	170	396.22ms
37	29.14ms	104	155.10ms	171	400.76ms
38	30.14ms	105	157.88ms	172	405.34ms
39	31.16ms	106	160.70ms	173	409.94ms
40	32.22ms	107	163.54ms	174	414.56ms
41	33.30ms	108	166.40ms	175	419.22ms
42	34.40ms	109	169.30ms	176	423.90ms
43	35.54ms	110	172.22ms	177	428.60ms
44	36.70ms	111	175.16ms	178	433.34ms
45	37.88ms	112	178.14ms	179	438.10ms
46	39.10ms	113	181.14ms	180	442.88ms
47	40.34ms	114	184.16ms	181	447.70ms
48	41.60ms	115	187.22ms	182	452.54ms
49	42.90ms	116	190.30ms	183	457.40ms
50	44.22ms	117	193.40ms	184	462.30ms
51	45.56ms	118	196.54ms	185	467.22ms
52	46.94ms	119	199.70ms	186	472.16ms
53	48.34ms	120	202.88ms	187	477.14ms
54	49.76ms	121	206.10ms	188	482.14ms
55	51.22ms	122	209.34ms	189	487.16ms
56	52.70ms	123	212.60ms	190	492.22ms
57	54.20ms	124	215.90ms	191	497.30ms
58	55.74ms	125	219.22ms	192	502.40ms
59	57.30ms	126	222.56ms	193	507.54ms
60	58.88ms	127	225.94ms	194	512.70ms
61	60.50ms	128	229.34ms	195	517.88ms
62	62.14ms	129	232.76ms	196	523.10ms
63	63.80ms	130	236.22ms	197	528.34ms
64	65.50ms	131	239.70ms	198	533.60ms
65	67.22ms	132	243.20ms	199	538.90ms
66	68.96ms	133	246.74ms	200	544.22ms

Table 30
VCM EQ Frequency

Data	Value	Data	Value
0	16.0Hz	69	850Hz
1	17.0Hz	70	900Hz
2	18.0Hz	71	950Hz
3	19.0Hz	72	1.00kHz
4	20.0Hz	73	1.06kHz
5	21.2Hz	74	1.12kHz
6	22.4Hz	75	1.18kHz
7	23.6Hz	76	1.25kHz
8	25.0Hz	77	1.32kHz
9	26.5Hz	78	1.40kHz
10	28.0Hz	79	1.50kHz
11	30.0Hz	80	1.60kHz
12	31.5Hz	81	1.70kHz
13	33.5Hz	82	1.80kHz
14	35.5Hz	83	1.90kHz
15	37.5Hz	84	2.00kHz
16	40.0Hz	85	2.12kHz
17	42.5Hz	86	2.24kHz
18	45.0Hz	87	2.36kHz
19	47.5Hz	88	2.50kHz
20	50.0Hz	89	2.65kHz
21	53.0Hz	90	2.80kHz
22	56.0Hz	91	3.00kHz
23	60.0Hz	92	3.15kHz
24	63.0Hz	93	3.35kHz
25	67.0Hz	94	3.55kHz
26	71.0Hz	95	3.75kHz
27	75.0Hz	96	4.00kHz
28	80.0Hz	97	4.25kHz
29	85.0Hz	98	4.50kHz
30	90.0Hz	99	4.75kHz
31	95.0Hz	100	5.00kHz
32	100Hz	101	5.30kHz
33	106Hz	102	5.60kHz
34	112Hz	103	6.00kHz
35	118Hz	104	6.30kHz
36	125Hz	105	6.70kHz
37	132Hz	106	7.10kHz
38	140Hz	107	7.50kHz
39	150Hz	108	8.00kHz
40	160Hz	109	8.50kHz
41	170Hz	110	9.00kHz
42	180Hz	111	9.50kHz
43	190Hz	112	10.0kHz
44	200Hz	113	10.6kHz
45	212Hz	114	11.2kHz
46	224Hz	115	11.8kHz
47	236Hz	116	12.5kHz
48	250Hz	117	13.2kHz
49	265Hz	118	14.0kHz
50	280Hz	119	15.0kHz
51	300Hz	120	16.0kHz
52	315Hz	121	17.0kHz
53	335Hz	122	18.0kHz
54	355Hz	123	19.0kHz
55	375Hz	124	20.0kHz
56	400Hz	125	21.2kHz
57	425Hz	126	22.4kHz
58	450Hz	127	23.6kHz
59	475Hz	128	25.0kHz
60	500Hz	129	26.5kHz
61	530Hz	130	28.0kHz
62	560Hz	131	30.0kHz
63	600Hz	132	31.5kHz
64	630Hz	133	33.5kHz
65	670Hz	134	35.5kHz
66	710Hz	135	37.5kHz
67	750Hz	136	40.0kHz
68	800Hz		

Table 31
VCM EQ Q

Data	Value
0	0.5
1	0.53
2	0.56
3	0.59
4	0.63
5	0.67
6	0.71
7	0.75
8	0.79
9	0.84
10	0.89
11	0.94
12	1
13	1.06
14	1.12
15	1.19
16	1.26
17	1.33
18	1.41
19	1.5
20	1.59
21	1.68
22	1.78
23	1.89
24	2
25	2.12
26	2.24
27	2.38
28	2.52
29	2.67
30	2.83
31	3
32	3.17
33	3.36
34	3.56
35	3.78
36	4
37	4.24
38	4.49
39	4.76
40	5.04
41	5.34
42	5.66
43	5.99
44	6.35
45	6.73
46	7.13
47	7.55
48	8
49	8.48
50	8.98
51	9.51
52	10.08
53	10.68
54	11.31
55	11.99
56	12.7
57	13.45
58	14.25
59	15.1
60	16

Table 39*
LFO Speed

Data	Value	Data	Value
0	0.100	64	1.009
1	0.103	65	1.051
2	0.105	66	1.093
3	0.110	67	1.125
4	0.113	68	1.167
5	0.118	69	1.22
6	0.124	70	1.262
7	0.129	71	1.304
8	0.131	72	1.346
9	0.137	73	1.409
10	0.142	74	1.451
11	0.147	75	1.514
12	0.152	76	1.556
13	0.158	77	1.619
14	0.166	78	1.682
15	0.171	79	1.745
16	0.176	80	1.808
17	0.184	81	1.872
18	0.192	82	1.956
19	0.197	83	2.019
20	0.205	84	2.103
21	0.213	85	2.166
22	0.221	86	2.25
23	0.229	87	2.334
24	0.237	88	2.418
25	0.247	89	2.502
26	0.255	90	2.608
27	0.265	91	2.692
28	0.276	92	2.776
29	0.284	93	2.902
30	0.294	94	2.986
31	0.308	95	3.112
32	0.318	96	3.238
33	0.329	97	3.365
34	0.342	98	3.491
35	0.352	99	3.617
36	0.368	100	3.743
37	0.379	101	3.869
38	0.394	102	4.037
39	0.410	103	4.164
40	0.426	104	4.332
41	0.442	105	4.500
42	0.457	106	4.668
43	0.473	107	4.837
44	0.489	108	5.005
45	0.51	109	5.173
46	0.526	110	5.383
47	0.547	111	5.552
48	0.568	112	5.804
49	0.589	113	5.972
50	0.61	114	6.224
51	0.631	115	6.393
52	0.657	116	6.645
53	0.673	117	6.897
54	0.704	118	7.15
55	0.725	119	7.402
56	0.757	120	7.738
57	0.789	121	7.991
58	0.81	122	8.327
59	0.841	123	8.58
60	0.873	124	8.916
61	0.904	125	9.253
62	0.946	126	9.589
63	0.978	127	9.925

Control List

Controller Set Destination

No.	Parameter		Voice	Drum
0	off	Common	O	O
1	Insertion Effect A Parameter 1	:	O	O
	:			
16	Insertion Effect A Parameter 16	:	O	O
17	Insertion Effect B Parameter 1	:	O	O
	:			
32	Insertion Effect B Parameter 16	:	O	O
33	Insertion Effect L Parameter 1	:	O	–
	:			
64	Insertion Effect L Parameter 32	:	O	–
65	Volume	:	O	O
66	Reverb Send	:	O	O
67	Chorus Send	:	O	O
68	Common LFO Speed	:	O	–
69	Common LFO Depth 1	:	O	–
70	Common LFO Depth 2	:	O	–
71	Common LFO Depth 3	:	O	–
72	Portamento Time	:	O	–
73	Element Level	Element	O	–
74	Element Pan	:	O	–
75	Key On Delay Time	:	O	–
76	Element LFO Speed	:	O	–
77	Elemnt LFO PMD	:	O	–
78	Elemnt LFO AMD	:	O	–
79	Elemnt LFO FMD	:	O	–
80	Coarse Tune	:	O	–
81	Fine Tune	:	O	–
82	PEG Depth	:	O	–
83	PEG Hold Time	:	O	–
84	PEG Attack Time	:	O	–
85	PEG Decay 1 Time	:	O	–
86	PEG Decay 2 Time	:	O	–
87	PEG Release Time	:	O	–
88	AEG Attack Time	:	O	–
89	AEG Decay 1 Time	:	O	–
90	AEG Decay 2 Time	:	O	–
91	AEG Release Time	:	O	–
92	FEG Depth	:	O	–
93	FEG Hold Time	:	O	–
94	FEG Attack Time	:	O	–
95	FEG Decay 1 Time	:	O	–
96	FEG Decay 2 Time	:	O	–
97	FEG Release Time	:	O	–
98	Cutoff Frequency	:	O	–
99	Resonance	:	O	–
100	HPF Cutoff Frequency	:	O	–
101	Mono/Poly	Common	O	–

LFO Box Destination

No.	Parameter	
0	Insertion Effect A Parameter 1	Common
	:	
15	Insertion Effect A Parameter 16	:
16	Insertion Effect B Parameter 1	:
	:	
31	Insertion Effect B Parameter 16	:
32	Insertion Effect L Parameter 1	:
	:	
63	Insertion Effect L Parameter 32	:
64	Amplitude Modulation	Element
65	Pitch Modulation	:
66	Filter Modulation	:
67	Resonance	:
68	Element Pan	:
69	Element LFO Speed	:

Performance List

USR1 (MSB=63, LSB=64)

Number		Performance Name	Main Category	Sub Category
1	A01	Piano Electro	Elect	Chill
2	A02	Neon Girlz	Elect	Trnce
3	A03	Altered States	Rock	Hard
4	A04	Lurch	R&B	HipHp
5	A05	Indian Xperience	Elect	Chill
6	A06	Clavi 70's 1	Jazz	JzFnk
7	A07	Purple Stone	Elect	Tekno
8	A08	Fountain	FX	Soft
9	A09	Lighthouse	Elect	Tekno
10	A10	Commander	SpLyr	Symph
11	A11	Open The Door	Rock	Clsic
12	A12	Jazz Lounge	Jazz	Swing
13	A13	Inner Wind	Elect	Chill
14	A14	Acid Shuffle	R&B	HipHp
15	A15	Pass the Naan	World	Ethnc
16	A16	Secret Film	FX	Seq
17	B01	Night Train	Elect	Chill
18	B02	Trance Vision	Elect	Trnce
19	B03	Rule The Earth	Rock	Clsic
20	B04	The Jammin Hood	R&B	HipHp
21	B05	Waht's This	Elect	Tekno
22	B06	Auto Funk 1	Jazz	JzFnk
23	B07	Electric Mystery	Elect	Chill
24	B08	Complex Beauty	FX	Soft
25	B09	Cool Madness	Elect	Tekno
26	B10	Yamaha Concerto	SpLyr	Symph
27	B11	Big Watches	Rock	Top40
28	B12	Swingin' Organ Club	Jazz	Swing
29	B13	Cool Breakz	Elect	Chill
30	B14	Rolla Freak	R&B	HipHp
31	B15	Piccolo Party	World	Ethnc
32	B16	Hand Mates	Elect	Chill
33	C01	Silent Lake	Elect	Chill
34	C02	Sweet Peaches	Elect	Trnce
35	C03	New Grunge	Rock	Hard
36	C04	4rims & a Microphone	R&B	HipHp
37	C05	Dub Bursts	Elect	Tekno
38	C06	Auto Funk 2	Jazz	JzFnk
39	C07	Bacteria	Elect	Chill
40	C08	Falling Monks	FX	Soft
41	C09	Dancing Sonar	R&B	Clsic
42	C10	Baroque Ensemble	SpLyr	Symph
43	C11	Sunny Beaches	Rock	Clsic
44	C12	Bebop Trio	Jazz	Swing
45	C13	Elektrik Arcade	Elect	Tekno
46	C14	Fairy Tale	SpLyr	Strng
47	C15	Piano Latino	World	Latin
48	C16	Chaos Layer	FX	Seq
49	D01	Gentle Chillgroove	Elect	Chill
50	D02	Distorted Dreamz	Elect	Trnce
51	D03	Into The Sunset	Rock	Balad
52	D04	Clubba Hop	R&B	HipHp
53	D05	Super Ninja Shot!	Elect	Tekno
54	D06	Clavi 70's 2	Jazz	JzFnk
55	D07	Peanut Butter Slices	Elect	Chill
56	D08	Warm Plasma	FX	Seq
57	D09	Drummers of Tokyo	Rock	Top40
58	D10	Epic Orchestra	SpLyr	Symph
59	D11	Piano Boogie	Rock	Clsic
60	D12	Sunset Horn	Jazz	Swing
61	D13	Lush Auto Comp	Elect	Tekno
62	D14	Don't Look!	R&B	Modrn
63	D15	Japan Festival	World	Ethnc
64	D16	Cloudy Bay	FX	Seq

Number		Performance Name	Main Category	Sub Category
65	E01	Sneaking Diamonds	Elect	Chill
66	E02	Plutonium Freezer	Elect	Tekno
67	E03	Alternative Pop	Rock	Top40
68	E04	GarageHopTrumpetBoi	R&B	Funk
69	E05	Whole Lotta 8ths	Rock	Hard
70	E06	Funky Funny Afro	R&B	Funk
71	E07	Laser Scratch	Elect	Chill
72	E08	Sands of Time	FX	Soft
73	E09	Confyooshus	Elect	House
74	E10	Fugue in D Minor	SpLyr	Symph
75	E11	Love Her Crazily	Rock	Clsic
76	E12	Jazz Vibe	Jazz	Swing
77	E13	Magnetic Fields	Elect	Tekno
78	E14	Hip Hop Orchestra	R&B	HipHp
79	E15	Afro Pop	World	Ethnc
80	E16	Eighties Dreams	FX	Seq
81	F01	Just Relax	Elect	Chill
82	F02	Headspinz	Elect	Tekno
83	F03	Rockin' the Country	Rock	Cntry
84	F04	Southern Rap Cat	R&B	HipHp
85	F05	Rusted Beat	Elect	Tekno
86	F06	Tenor to the Max	Jazz	JzFnk
87	F07	Chain Saw	Elect	Chill
88	F08	ARP Duo	FX	Seq
89	F09	Organs In Space	FX	Seq
90	F10	The Birth Of Life	SpLyr	Symph
91	F11	60s Border Town	Rock	Clsic
92	F12	Late Show	Jazz	Swing
93	F13	Synthlines	Elect	Tekno
94	F14	Schmusin'	R&B	Modrn
95	F15	Andalucia Wind	Rock	Film
96	F16	Raging Waves	FX	Seq
97	G01	Night Walk	Elect	Chill
98	G02	Glowing Socks	Elect	Tekno
99	G03	Auto Ballad	Rock	Balad
100	G04	HHop Goes For Curry	R&B	HipHp
101	G05	Atomic Bouncer	Elect	Tekno
102	G06	Soulful EP Player	R&B	Funk
103	G07	Buttoned Down	Elect	Chill
104	G08	Frosted World	FX	Seq
105	G09	Electrix	Elect	Tekno
106	G10	Worship Center	SpLyr	Organ
107	G11	Cheep King	Rock	Clsic
108	G12	Waltzing Quartet	Jazz	Swing
109	G13	Chill Performer	Elect	Chill
110	G14	Harp/Piccolo	SpLyr	WWind
111	G15	Homeward Bound	Elect	Tekno
112	G16	Lava Rhythm	FX	Seq
113	H01	Coded Message	Elect	Chill
114	H02	Mirror Wave	Elect	Chill
115	H03	80's Drummer	Rock	Top40
116	H04	Klap Yo Handz	R&B	HipHp
117	H05	Fata Morgana	Elect	Chill
118	H06	Hot E.P. Noodles	R&B	Funk
119	H07	Between the Lines	Elect	Tekno
120	H08	Ice Pizz	FX	Seq
121	H09	Welder	Elect	Tekno
122	H10	Strings/FrenchHorns	SpLyr	Symph
123	H11	Minor Mood	Rock	Balad
124	H12	Nitehawks	Jazz	Swing
125	H13	Talk Show Band	R&B	Funk
126	H14	Pastoral	SpLyr	WWind
127	H15	Smooth Guitar	Jazz	Smoth
128	H16	Intimacy	FX	Seq

USR2 (MSB=63, LSB=65)

Number		Performance Name	Main Category	Sub Category
1	A01	Chilltronika	Elect	Chill
2	A02	East Sider	R&B	HipHp
3	A03	Dreamscape	SpLyr	Symph
4	A04	Sub-sonic	Elect	Chill
5	A05	Chilln Keys	Elect	Chill
6	A06	Urban Shuffle	Rock	Clsic
7	A07	Green Oasis	SpLyr	Pad
8	A08	Andy Lucia	World	Latin
9	A09	Heart Breakz	Elect	Trnce
10	A10	Bop till you Drop	Jazz	Modrn
11	A11	White Sand Dub	Elect	Chill
12	A12	Double Dip the Funk	R&B	Funk
13	A13	Dark Continent	Rock	Clsic
14	A14	Electro Club	Elect	Tekno
15	A15	Slow and Low	R&B	HipHp
16	A16	Abyss of the Sea	FX	Seq
17	B01	Second Breakfast	Elect	Chill
18	B02	Coastal	R&B	HipHp
19	B03	Semi Finale	SpLyr	Symph
20	B04	DRY-Wash	Elect	Tekno
21	B05	Warm Feeling	Elect	Chill
22	B06	Strummin'&Hummin'	Rock	Cntry
23	B07	Ukigumo	FX	Seq
24	B08	Bellydancer	World	Ethnc
25	B09	Chart Breaker	Elect	Trnce
26	B10	Smooth It Over	Jazz	Smoth
27	B11	Sample & Hold	FX	Seq
28	B12	Funky Finger	R&B	Funk
29	B13	Yearn to see You	SpLyr	Synth
30	B14	Big Beater	Elect	Tekno
31	B15	Organ Cruise	R&B	Funk
32	B16	Oyashio	FX	S.EFX
33	C01	Synth Power	Rock	Top40
34	C02	Yah-Yo-Jah	R&B	HipHp
35	C03	Trumpet Concert	SpLyr	Brass
36	C04	Dancing Bars	Rock	Clsic
37	C05	Nightshadows	Elect	Chill
38	C06	Hold On a Minute	R&B	Clsic
39	C07	Kogarashi	FX	Soft
40	C08	Hot Sauce	World	Latin
41	C09	Cosmic Trance	Elect	Trnce
42	C10	Blues Organ Trio	Jazz	Swing
43	C11	Jembrana	FX	Seq
44	C12	Clavi Jam	R&B	Funk
45	C13	Free Fall	Rock	Clsic
46	C14	Tollhouse	Elect	Tekno
47	C15	String Accompaniment	SpLyr	Piano
48	C16	Arianes Nightwalk	FX	Seq
49	D01	Semar Dub	Elect	Chill
50	D02	Casbian Nights	R&B	HipHp
51	D03	Requiem	SpLyr	Symph
52	D04	Broiling	Elect	Tekno
53	D05	Wobbly Keys	Elect	Chill
54	D06	Rock of the 80's	Rock	Hard
55	D07	Crying Scene	SpLyr	Pad
56	D08	Two Hands of Latin	World	Latin
57	D09	Funfair	Elect	Trnce
58	D10	Night Cruiser	Jazz	Smoth
59	D11	Meeting Point	FX	Seq
60	D12	Analog Power	R&B	Funk
61	D13	Sarah's Dream	SpLyr	Synth
62	D14	Pursuer	Elect	Tekno
63	D15	Worship	R&B	Clsic
64	D16	Euro Animation	SpLyr	Brass

Number		Performance Name	Main Category	Sub Category
65	E01	Poppyhanger	Elect	Chill
66	E02	Neighbahood	R&B	HipHp
67	E03	Winds & Strings	SpLyr	WWind
68	E04	Deep House 1	Elect	House
69	E05	Wet Reflected Lights	Elect	Chill
70	E06	Classic Shuffle Rock	Rock	Clsic
71	E07	Silent Spheres	SpLyr	Pad
72	E08	Multi-Cultural	World	Ethnc
73	E09	Cool Box	Elect	Tekno
74	E10	Let's Comp!	Jazz	Swing
75	E11	Kuroshio	FX	Seq
76	E12	Acid Club	Jazz	Club
77	E13	Haze o' Phase	Elect	Tekno
78	E14	Gran Beat	Elect	Tekno
79	E15	Lake Side	SpLyr	Piano
80	E16	Sprinkler	FX	Soft
81	F01	Dub City	Elect	D&B
82	F02	West Coast Interact	R&B	HipHp
83	F03	Oboe Soloist	SpLyr	WWind
84	F04	Electric Monkeys	Elect	Tekno
85	F05	Chilly Dreams	Elect	Chill
86	F06	Echo Park Rock	Rock	Balad
87	F07	Angel Pad	SpLyr	Pad
88	F08	Latin 4 Beginners	World	Latin
89	F09	What is he doing?	Elect	Tekno
90	F10	Duck Groove	Jazz	Smoth
91	F11	Java Winds	FX	Seq
92	F12	Funky Jump	R&B	Funk
93	F13	Club Jazz 1	Jazz	Club
94	F14	Machine-Run	Elect	Tekno
95	F15	Full Monty	SpLyr	Organ
96	F16	Kyuketsuki	FX	S.EFX
97	G01	Auto Running	Elect	Chill
98	G02	Bubblicious	R&B	Modrn
99	G03	The Woodwind Section	SpLyr	WWind
100	G04	Maison Blanc	Elect	House
101	G05	Bristol	Elect	Chill
102	G06	Friday Night	Rock	Clsic
103	G07	Lake Pad	SpLyr	Pad
104	G08	Canto de rua	World	Latin
105	G09	Pound-a-thon	Elect	Tekno
106	G10	Film Noir	Jazz	Swing
107	G11	Teatime	FX	Seq
108	G12	Funk Jam	R&B	Funk
109	G13	Rattle and Roll	R&B	HipHp
110	G14	Club 80's	Elect	Tekno
111	G15	2 Manuals	SpLyr	Organ
112	G16	Needle Penalty	FX	S.EFX
113	H01	Magic Spell	Elect	Trnce
114	H02	The Duece	R&B	HipHp
115	H03	Movie Strings	SpLyr	Strng
116	H04	Nasty Dirty Funky	Elect	House
117	H05	Traumzeit	Elect	Chill
118	H06	Austin City Blues	Rock	Clsic
119	H07	Creepn Worm	SpLyr	Pad
120	H08	2 Guitars for Mrs R	World	Latin
121	H09	Subway Traxx Trigger	Elect	Trnce
122	H10	Dream Shuffle	Rock	Top40
123	H11	Snow na Oto	FX	Seq
124	H12	Thrust	Jazz	Smoth
125	H13	Elfin Dreams	Elect	Chill
126	H14	Crowded Place	Elect	Tekno
127	H15	American Beauty	SpLyr	Piano
128	H16	Space Gallery	FX	Soft

USR3 (MSB=63, LSB=66)

Number		Performance Name	Main Category	Sub Category
1	A01	Crushy Jegog	Elect	Chill
2	A02	Hip Hop Girl	R&B	HipHp
3	A03	Welcome to Sirius	FX	Soft
4	A04	Brit Piano Pop	Rock	Top40
5	A05	BleePAD	FX	Seq
6	A06	Orchestra Del Mar	FX	Seq
7	A07	Let the Music Play	Rock	Clsic
8	A08	Bubbly Dub	World	Regae
9	A09	Toys	Elect	Chill
10	A10	Blues Spell	Rock	Blues
11	A11	Random Breakz	Elect	Chill
12	A12	Piano+Analog Kit	Rock	Balad
13	A13	Dubrin!	FX	Seq
14	A14	Big Beat Trigger	Elect	Tekno
15	A15	Deborah in love	FX	Soft
16	A16	Psychic Trance	Elect	Trnce
17	B01	Power Worxx	Elect	Tekno
18	B02	Vanilla Wrapper	R&B	HipHp
19	B03	Blue Horizon	FX	Soft
20	B04	21st Century Bruce	Rock	Balad
21	B05	Ethereal	FX	Soft
22	B06	Istanbul	World	Ethnc
23	B07	Prog Rocker	Rock	Clsic
24	B08	Samba Electric	World	Latin
25	B09	Rivers of Stars	Elect	Chill
26	B10	Funk Night	R&B	Funk
27	B11	Sneaky Neutrons	Elect	Chill
28	B12	Love Songs	R&B	Modrn
29	B13	Bell Doesn't Ring	FX	Hard
30	B14	Body Pumping	Rock	Hard
31	B15	Arctic Landscape	FX	Hard
32	B16	Ambient Trigger	Elect	Tekno
33	C01	Rain Dance	Elect	Trnce
34	C02	Dirty South	R&B	HipHp
35	C03	Labyrinth	FX	Soft
36	C04	Acoustic Piano Man	Rock	Clsic
37	C05	Scattered Beatz	Elect	Chill
38	C06	Soft Analog	R&B	Clsic
39	C07	12 O'Clock High	Rock	Clsic
40	C08	Guitar Duo	World	Latin
41	C09	U make me crazy!	Elect	Chill
42	C10	Organ Jam	Jazz	JzFnk
43	C11	Wild Heart	Rock	Clsic
44	C12	Sweet Club	R&B	Modrn
45	C13	What'so funny?	FX	S.EFX
46	C14	Alternative1 Trigger	Rock	Hard
47	C15	4zone	FX	Seq
48	C16	Trance Trigger	Elect	Trnce
49	D01	Club 2007	Elect	Tekno
50	D02	Money on My Mind	R&B	HipHp
51	D03	Gate Orch	FX	Seq
52	D04	Lay Me Down to Sleep	Rock	Balad
53	D05	Komorebi	FX	Seq
54	D06	All Guitars	SpLyr	Guitr
55	D07	Retrock	Rock	Clsic
56	D08	Decadent World	World	Ethnc
57	D09	Talking Wizzards	Elect	Tekno
58	D10	W Coast '80	Jazz	Smoth
59	D11	Continental	Rock	Clsic
60	D12	Cloudy Morning	R&B	Modrn
61	D13	KURA-KURA	FX	S.EFX
62	D14	Dest Electra	Elect	Tekno
63	D15	Nuclear Fusion	FX	S.EFX
64	D16	Rolling City	Elect	Tekno

Number		Performance Name	Main Category	Sub Category
65	E01	Jazzy Garage	Elect	Tekno
66	E02	Hood Lovin	R&B	HipHp
67	E03	Evolving Spheres	FX	Soft
68	E04	Jack Does it Again	Rock	Clsic
69	E05	Psychobot Beat	Elect	Tekno
70	E06	Endless Summer	Rock	Balad
71	E07	Surfin' Kahuna	Rock	Clsic
72	E08	Tropic Groove	World	Regae
73	E09	Cosmic Bullets	Elect	Tekno
74	E10	Hopit	Jazz	JzFnk
75	E11	Portable	Rock	Clsic
76	E12	Wurli Ballad	Rock	Balad
77	E13	Intelligent Static	FX	S.EFX
78	E14	Progressive Trance	Elect	Trnce
79	E15	Circle of environmen	FX	S.EFX
80	E16	Straight Line	Elect	Trnce
81	F01	Rising Beat	Elect	Tekno
82	F02	Bring the Bling	R&B	HipHp
83	F03	Magic Carpet	FX	Hard
84	F04	Classic Rock	Rock	Clsic
85	F05	Tamfen-Loop	FX	Seq
86	F06	Campfire Split	SpLyr	Guitr
87	F07	Jukebox	Rock	Clsic
88	F08	Martini Orbit	World	Latin
89	F09	Wah Dub	Elect	Chill
90	F10	Smooth Lead Jam	Jazz	Smoth
91	F11	Metabolize	Elect	Tekno
92	F12	Dream Grand	SpLyr	Piano
93	F13	Petit Dark	FX	S.EFX
94	F14	Breakbeat 1	Elect	Tekno
95	F15	Insane Circuits	FX	S.EFX
96	F16	In a Trance	Elect	Trnce
97	G01	Deep House 2	Elect	House
98	G02	Southern Rap 1	R&B	HipHp
99	G03	Aztec Temple	Elect	Chill
100	G04	Unplugged	Rock	Clsic
101	G05	Hin Daeng	FX	Seq
102	G06	Micro Disco	FX	Seq
103	G07	Country Gee-tars	Rock	Cntry
104	G08	Bossa On the Beach	World	Latin
105	G09	IDM JAM	Elect	Chill
106	G10	Bluesy Moody	Jazz	JzFnk
107	G11	Metalheads	Rock	Hard
108	G12	Fretless Ballad	Rock	Balad
109	G13	Random Orchestra	FX	S.EFX
110	G14	Alternative2 Trigger	Rock	Hard
111	G15	Sea electron Bottom	FX	Seq
112	G16	Ambient Fluid	Elect	Trnce
113	H01	Love Box	Elect	Chill
114	H02	Boom Snap	R&B	HipHp
115	H03	Robby	Elect	Tekno
116	H04	80's young gun	Rock	Clsic
117	H05	Natural Woman	Elect	Chill
118	H06	Very Clavistitious	R&B	Funk
119	H07	Psychedelic Dream	Rock	Clsic
120	H08	Asahi ni niou	World	Ethnc
121	H09	Dust of Mars	Elect	Chill
122	H10	Late Walk	Jazz	Smoth
123	H11	Cityscape	Elect	Chill
124	H12	EP Ballad	Rock	Balad
125	H13	Information	FX	S.EFX
126	H14	Squelchy Tub Thunk	Elect	Tekno
127	H15	Nouveau Gangsta	Elect	Chill
128	H16	SciFi Foley - Atonal	FX	Hard

USR4 (MSB=63, LSB=67)

Number		Performance Name	Main Category	Sub Category
1	A01	Proggo Rocko	Rock	Hard
2	A02	New R&B Motif Triggr	R&B	HipHp
3	A03	Tumbling Galaxies	FX	Seq
4	A04	Old School Acid	Elect	Trnce
5	A05	Vintage Rider	R&B	Modrn
6	A06	Ethnic Dance (4ARP)	World	Ethnc
7	A07	When The Piggies Fly	Rock	Clsic
8	A08	Big Apple	Jazz	Modrn
9	A09	The March of Progres	SpLyr	Symph
10	A10	Club Jazz 2	Jazz	Club
11	A11	Dream Ballad	SpLyr	Piano
12	A12	Meringue	World	Latin
13	A13	Mad IDM	Elect	D&B
14	A14	Rare Groove	Jazz	JzFnk
15	A15	8beat Basic	Rock	Clsic
16	A16	Far Away from Home	FX	Seq
17	B01	16beat Rock	Rock	Hard
18	B02	The Walls (4ARP)	R&B	HipHp
19	B03	Triathlon	FX	Seq
20	B04	Latin House	Elect	House
21	B05	Sneak Thru the Nite	R&B	Modrn
22	B06	Africana	World	Ethnc
23	B07	Worship Fast (4ARP)	Rock	Folk
24	B08	Jazz Breeze	Jazz	Swing
25	B09	More Chester	SpLyr	Symph
26	B10	Clavi Funk	Jazz	JzFnk
27	B11	Gentle Support	SpLyr	Pad
28	B12	Single Coil	Rock	Blues
29	B13	Bubble Techno	Elect	Tekno
30	B14	'70th	R&B	Funk
31	B15	Newbury Street 1980	Rock	Clsic
32	B16	Nashville Ballad	Rock	Balad
33	C01	Contemporary Rock	Rock	Top40
34	C02	Hip Hop (4ARP)	R&B	HipHp
35	C03	Underground	FX	Seq
36	C04	Back To The Jungle	Elect	D&B
37	C05	Slow & Easy	Rock	Film
38	C06	Maya Ruins (4ARP)	World	Ethnc
39	C07	Blues	Rock	Blues
40	C08	Rag Time Strut(4ARP)	Jazz	Swing
41	C09	Philharmonic	SpLyr	Symph
42	C10	Pop Shuffle	Jazz	JzFnk
43	C11	Love Affair	SpLyr	Piano
44	C12	Spanish Romance	World	Latin
45	C13	Trance-a-lator	Elect	Trnce
46	C14	Follow The Funk	R&B	Funk
47	C15	3 Chords & The Truth	Rock	Cntry
48	C16	Won't be a minute	Rock	Balad
49	D01	Power Rock (4ARP)	Rock	Hard
50	D02	Brother	R&B	HipHp
51	D03	RANDAVE	FX	Seq
52	D04	Breakbeat 2 Trigger	Elect	Tekno
53	D05	Funky Breath	R&B	HipHp
54	D06	Nation Capture	World	Ethnc
55	D07	Closing Time	Rock	Balad
56	D08	Jazz Quartet	Jazz	Modrn
57	D09	Son of Mars	SpLyr	Symph
58	D10	16beat Pop	Jazz	JzFnk
59	D11	Ballad Piano&Bass	SpLyr	Piano
60	D12	Southern Gtr Ballad	Rock	Folk
61	D13	Neo Half	FX	Seq
62	D14	Dark EP Jam	Jazz	Smoth
63	D15	Motor City Rules	R&B	Clsic
64	D16	Watch Out	R&B	Modrn

Number		Performance Name	Main Category	Sub Category
65	E01	Death Metal (4ARP)	Rock	Hard
66	E02	Southern Rap 2	R&B	HipHp
67	E03	Alcoholic	FX	Seq
68	E04	Power Grid	Elect	Tekno
69	E05	ZAZA Pop	R&B	Modrn
70	E06	Exodus	World	Regae
71	E07	Piano Boogie Woogie	Rock	Blues
72	E08	Modern Jazz (4ARP)	Jazz	Modrn
73	E09	Violin Concerto	SpLyr	Strng
74	E10	Soul Swing	R&B	Clsic
75	E11	Sailboarding	SpLyr	Pad
76	E12	Guitar+PianoBallad	SpLyr	Guitr
77	E13	Aqua Techno	Elect	Tekno
78	E14	UK Soul	R&B	Funk
79	E15	Heavy 8s	Rock	Top40
80	E16	Softy	Jazz	Smoth
81	F01	Progre	Rock	Hard
82	F02	Regeton (4ARP)	R&B	HipHp
83	F03	ZAVE	FX	Seq
84	F04	Bringin Phaser(4ARP)	Elect	Tekno
85	F05	Keys 2 da Undrgrnd	R&B	HipHp
86	F06	Rasta Man's Revenge	World	Regae
87	F07	8beat Rock	Rock	Clsic
88	F08	Bombastico to E3	World	Latin
89	F09	Bach o' Roll	SpLyr	Symph
90	F10	Gospel Brothers	R&B	Clsic
91	F11	Jazz Duo	SpLyr	Piano
92	F12	Strummers (4ARP)	SpLyr	Guitr
93	F13	Synthethnic	Elect	Tekno
94	F14	Hey Sixteen	Jazz	JzFnk
95	F15	Desert Drive (4ARP)	Rock	Balad
96	F16	It May Sustain . . .	Elect	Chill
97	G01	Rockacha	Rock	Clsic
98	G02	J-Hip Rock (4ARP)	R&B	HipHp
99	G03	Endless	FX	Seq
100	G04	Long Dark Tunnel	Elect	D&B
101	G05	Soft Groover	R&B	Modrn
102	G06	Summer Festival	World	Regae
103	G07	Country EP	Rock	Cntry
104	G08	Slow Down & Ease Up	Jazz	JzFnk
105	G09	ARP Piano Concerto	SpLyr	Piano
106	G10	African Funk (4ARP)	Jazz	JzFnk
107	G11	Standing on Air	SpLyr	Pad
108	G12	Spanish Fiesta	World	Latin
109	G13	TEKNICON	FX	Seq
110	G14	Philly Aboard	R&B	Funk
111	G15	Northern Pop	Rock	Top40
112	G16	Ibiza Growl Sax	Elect	Chill
113	H01	Shuffle Blues	Rock	Blues
114	H02	Down Wid It Trigger	R&B	HipHp
115	H03	Star Gate	FX	S.EFX
116	H04	Dark Mod Drummer	FX	Seq
117	H05	Dirty Mini	R&B	Modrn
118	H06	HillsDanceEthno 4ARP	Elect	Trnce
119	H07	Slow Blues	Rock	Blues
120	H08	Rodovia	World	Latin
121	H09	Big Strings	SpLyr	Strng
122	H10	Sumo-Funk	R&B	Clsic
123	H11	XtraTerrestrialFrogs	FX	Seq
124	H12	Tear It Up	R&B	Funk
125	H13	Psynchro	Elect	Tekno
126	H14	Just the Facts	Jazz	JzFnk
127	H15	80's American (4ARP)	Rock	Clsic
128	H16	Business Lunch	Elect	Chill

Master Assign List

Master No.	Master Name	Mode	Bank Name	Program Number
1	Inner Wind	Performance	User1	13
2	Natural Grand S6	Voice	User1	1
3	Arched Top	Voice	User1	35
4	The Jammin Hood	Performance	User1	20
5	Altered States	Performance	User1	3
6	Rule The Earth	Performance	User1	19
7	Tremolo Section	Voice	User1	53
8	[Demo Song 1]	Song	---	1
9	Jazz Lounge	Performance	User1	12
10	Trance Vision	Performance	User1	18
11	Buttoned Down	Performance	User1	103
12	Open The Door	Performance	User1	11
13	GarageHopTrumpetBoi	Performance	User1	68
14	Commander	Performance	User1	10
15	Fountain	Performance	User1	8
16	Lurch	Performance	User1	4
17	Piano Electro	Performance	User1	1
18	French Horn Section2	Voice	User1	63
19	Pass the Naan	Performance	User1	15
20	Big Watches	Performance	User1	27
21	Swingin' Organ Club	Performance	User1	28
22	Clavi Touch Wah	Voice	User1	8
23	Vx Dark Bars	Voice	User1	13
24	[Demo Song 2]	Song	---	2
25	Super Ninja Shot!	Performance	User1	53
26	Drummers of Tokyo	Performance	User1	57
27	Neon Girlz	Performance	User1	2
28	Berlin Dreamz	Voice	User1	109
29	Indian Xperience	Performance	User1	5
30	Sands of Time	Performance	User1	72
31	Organs In Space	Performance	User1	89
32	Illest Hip Hop Kit	Voice	User Drum	4
33	U make me crazy!	Performance	User3	41
34	Natural Wurli	Voice	Pre1	45
35	On my Way to UK	Voice	Pre7	105
36	Money on My Mind	Performance	User3	50
37	80's young gun	Performance	User3	116
38	Prec Amped AF1	Voice	Pre3	27
39	Cello Duo AF1	Voice	Pre4	6
40	[Demo Song 3]	Song	---	3
41	Blues Spell	Performance	User3	10
42	Psychedelic Dream	Performance	User3	119
43	Trance Trigger	Performance	User3	48
44	FullDraw/CVibrato	Voice	Pre1	104
45	Austin City Blues	Performance	User2	118
46	Requiem	Performance	User2	51
47	Nuclear Fusion	Performance	User3	63
48	Casbian Nights	Performance	User2	50
49	Natural Woman	Performance	User3	117
50	Full Tine	Voice	Pre1	52
51	Simple Arp	Voice	Pre8	8
52	Dirty South	Performance	User3	34
53	Metalheads	Performance	User3	107
54	Crunched Up 376	Voice	Pre2	111
55	Almighty	Voice	Pre4	12
56	[Demo Pattern 1]	Pattern	---	1
57	Film Noir	Performance	User2	106
58	Crowded Place	Performance	User2	126
59	What'so funny?	Performance	User3	45
60	Dynamic Brass AF1&2	Voice	Pre4	97
61	Acid Club	Performance	User2	76
62	Trumpet Concert	Performance	User2	35
63	Flying Rhythm Bars	Voice	Pre1	128
64	Canto de rua	Performance	User2	104

Master No.	Master Name	Mode	Bank Name	Program Number
65	Chilltronika	Performance	User2	1
66	CP 1979	Voice	Pre1	19
67	Vowel Pad	Voice	Pre6	27
68	Slow and Low	Performance	User2	15
69	Echo Park Rock	Performance	User2	86
70	Army Bass	Voice	Pre3	117
71	Sweet Oboe Legato	Voice	Pre5	21
72	[Demo Pattern 2]	Pattern	---	2
73	Let's Comp!	Performance	User2	74
74	Heart Breakz	Performance	User2	9
75	Club 2007	Performance	User3	49
76	On Road AS1	Voice	Pre1	91
77	W Coast '80	Performance	User3	58
78	Kogarashi	Performance	User2	39
79	Sample & Hold	Performance	User2	27
80	Multi-Cultural	Performance	User2	72
81	Jembrana	Performance	User2	43
82	Vintage'74	Voice	Pre1	22
83	Dark Modulation Pad	Voice	Pre5	117
84	Yah-Yo-Jah	Performance	User2	34
85	Jukebox	Performance	User3	87
86	Mute & Slide Vel	Voice	Pre2	61
87	Violin Solo 2 AF1	Voice	Pre4	2
88	[Demo Pattern 3]	Pattern	---	3
89	Hold On a Minute	Performance	User2	38
90	Dancing Bars	Performance	User2	36
91	Electro Club	Performance	User2	14
92	Big Syn	Voice	Pre4	117
93	Duck Groove	Performance	User2	90
94	Oboe Soloist	Performance	User2	83
95	KURA-KURA	Performance	User3	61
96	Bubbly Dub	Performance	User3	8
97	Gran Beat	Performance	User2	78
98	1968	Voice	Pre1	18
99	Catching Wild Horses	Voice	Pre6	59
100	Hood Lovin	Performance	User3	66
101	Surfin' Kahuna	Performance	User3	71
102	Voodooman	Voice	Pre2	126
103	Velo Growl Legato	Voice	Pre5	10
104	Brit Piano Pop	Performance	User3	4
105	Blues Organ Trio	Performance	User2	42
106	Funfair	Performance	User2	57
107	Magic Spell	Performance	User2	113
108	Panther	Voice	Pre1	119
109	Funky Finger	Performance	User2	28
110	Sprinkler	Performance	User2	80
111	Snow na Oto	Performance	User2	123
112	Decadent World	Performance	User3	56
113	Dream Shuffle	Performance	User2	122
114	Contempo	Voice	Pre1	35
115	Pearls	Voice	Pre6	37
116	West Coast Interact	Performance	User2	82
117	Let the Music Play	Performance	User3	7
118	Moon Bass	Voice	Pre3	57
119	Warm Big	Voice	Pre4	45
120	Acoustic Piano Man	Performance	User3	36
121	All Guitars	Performance	User3	54
122	Maison Blanc	Performance	User2	100
123	Dest Electra	Performance	User3	62
124	Ob Soft	Voice	Pre4	127
125	Cloudy Morning	Performance	User3	60
126	Winds & Strings	Performance	User2	67
127	Kuroshio	Performance	User2	75
128	Bossa On the Beach	Performance	User3	104

Mixing Template List

No.	Name
1	Contemporary R&B
2	Flip Hop
3	Hip Hop 1
4	Hip Hop 2
5	Disco
6	Funk 1
7	Funk 2
8	70's Rock
9	Soft Rock
10	Unplugged
11	Piano Club
12	Cool Funk
13	Analog Pop
14	Guitar Pop
15	Slowfeel
16	Combo Jazz
17	Samba
18	Salsa
19	Montuno
20	Reggae
21	Trance
22	Ibiza Trance
23	Dream Dance
24	Synth Pop
25	Chill Out
26	Club House
27	Latin House
28	Garage
29	Retro Pop
30	Xover Rock
31	Spanish Pop
32	Turkish Pop

MIDI Data Format

Many MIDI messages listed in the MIDI Data Format section are expressed in hexadecimal or binary numbers. Hexadecimal numbers may include the letter “H” as a suffix. The letter “n” indicates a certain whole number.
The chart below lists the corresponding decimal number for each hexadecimal number.

Decimal	Hexadecimal	Decimal	Hexadecimal
0	0	64	40
1	1	65	41
2	2	66	42
3	3	67	43
4	4	68	44
5	5	69	45
6	6	70	46
7	7	71	47
8	8	72	48
9	9	73	49
10	0A	74	4A
11	0B	75	4B
12	0C	76	4C
13	0D	77	4D
14	0E	78	4E
15	0F	79	4F
16	10	80	50
17	11	81	51
18	12	82	52
19	13	83	53
20	14	84	54
21	15	85	55
22	16	86	56
23	17	87	57
24	18	88	58
25	19	89	59
26	1A	90	5A
27	1B	91	5B
28	1C	92	5C
29	1D	93	5D
30	1E	94	5E
31	1F	95	5F
32	20	96	60
33	21	97	61
34	22	98	62
35	23	99	63
36	24	100	64
37	25	101	65
38	26	102	66
39	27	103	67
40	28	104	68
41	29	105	69
42	2A	106	6A
43	2B	107	6B
44	2C	108	6C
45	2D	109	6D
46	2E	110	6E
47	2F	111	6F
48	30	112	70
49	31	113	71
50	32	114	72
51	33	115	73
52	34	116	74
53	35	117	75
54	36	118	76
55	37	119	77
56	38	120	78
57	39	121	79
58	3A	122	7A
59	3B	123	7B
60	3C	124	7C
61	3D	125	7D
62	3E	126	7E
63	3F	127	7F

Additional Notes

- For example, 144 – 159(Decimal)/9nH/1001 0000 – 1001 1111(Binary) indicate the note-on messages for the channels 1 through 16 respectively. 176 – 191/BnH/1011 0000 – 1011 1111 indicate the control change messages for the channels 1 through 16 respectively. 192 – 207/CnH/1100 0000 – 1100 1111 indicate the program change messages for the channels 1 through 16 respectively. 240/F0H/1111 0000 is positioned at the beginning of data to indicate a system exclusive message. 247/F7H/1111 0111 is positioned at the end of the system exclusive message.

- aaH (Hexadecimal)/0aaaaaaa (Binary) indicates the data addresses. The data address consists of High, Mid and Low.

- bbH/0bbbbbbb indicates byte counts.

- ccH/0ccccccc indicates check sums.

- ddH/0ddddddd indicates data/value.

SYNTHSIZER/SEQUENCER PART

(1) TRANSMIT FLOW

```
MIDI <-+-[SW1]--+---------NOTE ON/OFF                          9nH
OUT    |        |
       |        +---------KEY'S AFTER TOUCH                   AnH (Seq only)
       |        |
       |        +---------CONTROL CHANGE (All in Seq)
       |        |              MODULATION                     BnH, 01H
       |        |              VOLUME                         BnH, 07H
       |        |              PAN                            BnH, 0AH
       |        |              SUSTAIN SWITCH                 BnH, 40H
       |        |              FILTER RESONANCE               BnH, 47H
       |        |              EG RELEASE TIME                BnH, 48H
       |        |              EG ATTACK TIME                 BnH, 49H
       |        |              FILTER CUTOFF FREQ             BnH, 4AH
       |        |              EG DECAY TIME                  BnH, 4BH
       |        |              REVERB SEND                    BnH, 5BH
       |        |              CHORUS SEND                    BnH, 5DH
       |        |              ASSIGNABLE CONTROLLERS         BnH, (01H .. 5FH)
       |        |
       |        +--[SW7]--BANK SEL MSB                        BnH, 00H
       |        |         BANK SEL LSB                        BnH, 20H
       |        |
       |        +---------CHANNEL MODE MESSAGE (Seq only)
       |        |              ALL SOUND OFF                  BnH, 78H
       |        |              RESET ALL CONTROLLERS          BnH, 79H
       |        |              LOCAL CONTROL                  BnH, 7AH
       |        |              ALL NOTE OFF                   BnH, 7BH
       |        |              OMNI MODE OFF                  BnH, 7CH
       |        |              OMNI MODE ON                   BnH, 7DH
       |        |              MONO MODE ON                   BnH, 7EH
       |        |              POLY MODE ON                   BnH, 7FH
       |        |
       |        +--[SW8]--PROGRAM CHANGE                      CnH
       |        |
       |        +---------CHANNEL AFTER TOUCH                 DnH
       |        |
       |        +---------PITCH BEND CHANGE                   EnH
       |
       +--[SW3]----------SYSTEM COMMON MESSAGE
       |                       SONG POSITION POINTER          F2H
       |                       SONG SELECT                    F3H
       |
       +--[SW4]----------SYSTEM REALTIME MESSAGE
       |                       TIMING CLOCK                   F8H
       |
       +--[SW3]----------SYSTEM REALTIME MESSAGE
       |                       START                          FAH
       |                       CONTINUE                       FBH
       |                       STOP                           FCH
       |
       +-----------------ACTIVE SENSING                       FEH
       |
       +--[SW5]-+---------SYSTEM EXCLUSIVE MESSAGE (All in Seq)
       |        +--[SW6]--<BULK DUMP>
       |        |              F0H 43H 0nH 7FH 12H bhH blH ahH amH alH ddH....ddH ccH F7H
       |        |
       |        +--[SW6]--<PARAMETER CHANGE>
       |                       F0H 43H 1nH 7FH 12H ahH amH alH ddH.....ddH F7H
       |
       +-----------------SYSTEM EXCLUSIVE MESSAGE
       |                       IDENTITY REPLY
       |                       F0H 7EH 7FH 06H 02H 43H 00H 41H ddH ddH mmH 00H 00H 7FH F7H
       |
       |                       dd: Device family number/code
       |                        MOTIF XF6: 41H 06H
       |                        MOTIF XF7: 42H 06H
       |                        MOTIF XF8: 43H 06H
       |
       |                       mm: version
       |                        mm = (version no. - 1.0) * 10
       |                       e.g.) version 1.0 mm = (1.0 - 1.0) * 10 = 0
       |                             version 1.5 mm = (1.5 - 1.0) * 10 = 5
       |
       +--[SW2]----------MIDI MACHINE CONTROL
                               STOP                     F0H 7FH 7FH 06H 01H F7H
                               DEFERRED PLAY            F0H 7FH 7FH 06H 03H F7H
                               LOCATE                   F0H 7FH 7FH 06H 44H 06H 01H
                                                        hrH mnH scH frH ffH F7H
```

[SW1] MIDI Transmit Channel
In the Master mode: complies with Zone Transmit Channel.
In the mode other than the Master: complies with Keyboard Transmit Channel.
The sequence data played back in the Song/Pattern mode is transmitted according to the MIDI Filter settings.
[SW2] MIDI Sync (transmitted when the MIDI Sync is set to MTC.)
[SW3] SYSTEM Sequencer Control
[SW4] SYSTEM MIDI Clock Out
[SW5] SYSTEM MIDI Device Number
When set to all, transmitted via 1.
The sequence data played back in the Song/Pattern mode is transmitted according to the MIDI Filter settings.
[SW6] The Edit Buffer data (just currently edited data) will be transmitted/received only in the corresponding Mode.
The other types of data such as Utility settings can be transmitted/received in any mode.
[SW7] SYSTEM Bank Select Switch
[SW8] SYSTEM Program Change Switch

(2) RECEIVE FLOW

```
MIDI>-+-[SW1]--+---------NOTE OFF                        8nH
      |        |
      |        +---------NOTE ON/OFF                     9nH
      |        |
      |        +---------KEY'S AFTER TOUCH               AnH (Seq only)
      |        |
      |        +---------CONTROL CHANGE (All in Seq)
      |        |           MODULATION                    BnH, 01H
      |        |           PORTAMENTO TIME               BnH, 05H
      |        |           DATA ENTRY MSB                BnH, 06H
      |        |           DATA ENTRY LSB                BnH, 26H
      |        |           CHANNEL VOLUME                BnH, 07H
      |        |           PAN                           BnH, 0AH
      |        |           EXPRESSION                    BnH, 0BH
      |        |           SUSTAIN SWITCH                BnH, 40H
      |        |           PORTAMENTO SWITCH             BnH, 41H
      |        |           SOSTENUTO                     BnH, 42H
      |        |           HARMONIC CONTENT              BnH, 47H
      |        |           EG RELEASE TIME               BnH, 48H
      |        |           EG ATTACK TIME                BnH, 49H
      |        |           BRIGHTNESS                    BnH, 4AH
      |        |           EG DECAY TIME                 BnH, 4BH
      |        |           EFFECTS 1 DEPTH               BnH, 5BH
      |        |           EFFECTS 3 DEPTH               BnH, 5DH
      |        |           DATA ENTRY INC                BnH, 60H
      |        |           DATA ENTRY DEC                BnH, 61H
      |        |           ASSIGNABLE CONTROLLER         BnH, (01H .. 5FH)
      |        |           RPN
      |        |            PITCH BEND SENS.             BnH, 64H, 00H, 65H, 00H, 06H,
      |        |                                         mmH
      |        |            FINE TUNING                  BnH, 64H, 01H, 65H, 00H, 06H,
      |        |                                         mmH, 26H, llH
      |        |            COARSE TUNING                BnH, 64H, 02H, 65H, 00H, 06H,
      |        |                                         mmH
      |        |            RPN RESET                    BnH, 64H, 7FH, 65H, 7FH
      |        |
      |        +--[SW7]--BANK SEL MSB                    BnH, 00H
      |        |        BANK SEL LSB                    BnH, 20H
      |        |
      |        +---------CHANNEL MODE MESSAGE
      |        |           ALL SOUND OFF                 BnH, 78H
      |        |           RESET ALL CONTROLLERS         BnH, 79H
      |        |           ALL NOTE OFF                  BnH, 7BH
      |        |           OMNI MODE OFF                 BnH, 7CH                *1
      |        |           OMNI MODE ON                  BnH, 7DH                *1
      |        |           MONO MODE ON                  BnH, 7EH
      |        |           POLY MODE ON                  BnH, 7FH
      |        |
      |        +--[SW8]--PROGRAM CHANGE                  CnH
      |        |
      |        +---------CHANNEL AFTER TOUCH             DnH
      |        |
      |        +---------PITCH BEND CHANGE               EnH
      |
      +--[SW2]-----------SYSTEM COMMON MESSAGE
      |                   MTC QUARTER FRAME MESSAGE      F1H
      |
      +--[SW3]-----------SYSTEM COMMON MESSAGE
      |                   SONG POSITION POINTER          F2H
      |                   SONG SELECT                    F3H
      |
      +--[SW2]-----------SYSTEM REALTIME MESSAGE
      |                   TIMING CLOCK                   F8H
      |
      +--[SW3]-----------SYSTEM REALTIME MESSAGE
      |                   START                          FAH
      |                   CONTINUE                       FBH
      |                   STOP                           FCH
      |
      +------------------ACTIVE SENSING                  FEH
      |
      +--[SW4]-+---------SYSTEM EXCLUSIVE MESSAGE (All in Seq)
      |        |           MIDI MASTER VOLUME            F0H 7FH 7FH 04H 01H llH mmH F7H
      |        |
      |        +--[SW6]---<BULK DUMP>
      |        |           F0H 43H 0nH 7FH 12H bhH blH ahH amH alH ddH....ddH ccH F7H
      |        |
      |        +--[SW5]---<PARAMETER CHANGE>
      |        |           F0H 43H 1nH 7FH 12H ahH amH alH ddH.....ddH F7H
      |        |
      |        +--[SW6]---<BULK DUMP REQUEST>
      |        |           F0H 43H 2nH 7FH 12H ahH amH alH ddH.....ddH F7H
      |        |
      |        +--[SW5]---<PARAMETER REQUEST>
      |        |           F0H 43H 3nH 7FH 12H ahH amH alH F7H
      |        |
      |        +----------GM MODE ON
      |                   F0H 7EH 7FH 09H 01H F7H
      |
      +------------------SYSTEM EXCLUSIVE MESSAGE
                          IDENTITY REQUEST               F0H 7EH 0nH 06H 01H F7H
```

[SW1] In the Voice mode: complies with Basic Receive Channel
In the Performance mode: complies with Basic Receive Channel and Part Receive Switch
In the Song/Pattern mode: complies with Part Receive Channel and Part Receive Switch.
The sequence data recorded to the Song/Pattern is recognized according to the MIDI Filter settings.
[SW2] SYSTEM MIDI Sync (can be set to "internal," "MIDI," or "MTC.")
[SW3] SYSTEM Sequencer Control
[SW4] SYSTEM MIDI Device Number
When this is not set to off, the MIDI Master Volume can be recognized in any mode.
The sequence data played back in the Song/Pattern mode is transmitted according to the MIDI Filter settings.
[SW5] The Edit Buffer data of a mode can be recognized in only the current mode.
The other types of data can be transmitted/recognized in any mode.
[SW6] SYSTEM Bulk Recive Switch and same as SW5
[SW7] SYSTEM Bank Select Switch
[SW8] SYSTEM Program Change Switch

*1 Received only in the Voice Mode

(3) TRANSMIT/RECEIVE DATA

(3-1) CHANNEL VOICE MESSAGES

(3-1-1) NOTE OFF

```
STATUS              1000nnnn (8nH)          n = 0 - 15 CHANNEL NUMBER
NOTE No.            0kkkkkkk                k = 0 (C-2) - 127 (G8)
VELOCITY            0vvvvvvv                v: ignored
Receive only
```

(3-1-2) NOTE ON/OFF

```
STATUS              1001nnnn (9nH)          n = 0 - 15 CHANNEL NUMBER
NOTE NUMBER         0kkkkkkk                k = 0 (C-2) - 127 (G8)
VELOCITY NOTE ON    0vvvvvvv (v≠0)
         NOTE OFF   0vvvvvvv (v=0)
```

(3-1-3) CONTROL CHANGE

```
STATUS              1011nnnn (BnH)          n = 0 - 15 CHANNEL NUMBER
CONTROL NUMBER      0ccccccc
CONTROL VALUE       0vvvvvvv

*TRANSMITTED CONTROL NUMBER
c =  0              BANK SEL MSB            ; v = 0 - 127                      *3
c = 32              BANK SEL LSB            ; v = 0 - 127                      *3
c =  1              MODULATION              ; v = 0 - 127
c =  7              CHANNEL VOLUME          ; v = 0 - 127
c = 10              PAN                     ; v = 0 - 127
c = 11              EXPRESSION              ; v = 0 - 127
c = 64              SUSTAIN                 ; v = 0 - 127                      *7
c = 71              FILTER RESONANCE        ; v = 0: -64 - 64: 0 - 127: +63
c = 72              EG RELEASE TIME         ; v = 0: -64 - 64: 0 - 127: +63
c = 73              EG ATTACK TIME          ; v = 0: -64 - 64: 0 - 127: +63
c = 74              FILTER CUTOFF FREQ      ; v = 0: -64 - 64: 0 - 127: +63
c = 75              EG DECAY TIME           ; v = 0: -64 - 64: 0 - 127: +63
c = 91              REVERB SEND             ; v = 0 - 127
c = 93              CHORUS SEND             ; v = 0 - 127
c = 1..95           ASSIGNABLE CONTROLLERS  ; v = 0 - 127                      *4
The Sequencer Part will play back all recorded control change messages.

* RECEIVED CONTROL NUMBER
c =  0              BANK SEL MSB            ; v = 0 - 127                      *3
c = 32              BANK SEL LSB            ; v = 0 - 127                      *3
c =  1              MODULATION              ; v = 0 - 127
c =  5              PORTAMENTO TIME         ; v = 0 - 127                      *2
c =  6              DATA ENTRY MSB          ; v = 0 - 127                      *1
c = 38              DATA ENTRY LSB          ; v = 0 - 127                      *1
c =  7              CHANNEL VOLUME          ; v = 0 - 127
c = 10              PAN                     ; v = 0 - 127
c = 11              EXPRESSION              ; v = 0 - 127
c = 64              SUSTAIN                 ; v = 0 - 127
c = 65              PORTAMENTO SWITCH       ; v = 0 - 63: OFF, 64 - 127: ON    *2
c = 66              SOSTENUTO               ; v = 0 - 63: OFF, 64 - 127: ON
c = 71              HARMONIC CONTENT        ; v = 0: -64 - 64: 0 - 127: +63
c = 72              EG RELEASE TIME         ; v = 0: -64 - 64: 0 - 127: +63    *2
c = 73              EG ATTACK TIME          ; v = 0: -64 - 64: 0 - 127: +63
c = 74              BRIGHTNESS              ; v = 0: -64 - 64: 0 - 127: +63
c = 75              EG DECAY TIME           ; v = 0: -64 - 64: 0 - 127: +63
c = 91              EFFECTS 1 DEPTH         ; v = 0 - 127
c = 93              EFFECTS 3 DEPTH         ; v = 0 - 127
c = 96              DATA ENTRY INC          ; v = 127                          *1
c = 97              DATA ENTRY DEC          ; v = 127                          *1
c = 1..95           ASSIGNABLE CONTROLLER   ; v = 0 - 127                      *4
All Control Change events can be recorded to the song/pattern.
```

*1 Used only when a value is set using RPN.
*2 Invalid with Drum Voices.
*3 Relation between BANK CHANGE and PROGRAM is as follows:

CATEGORY	MSB	LSB	PROGRAM No.	
GM Voice	0	0	0..127 (1..128)	
GM Drum Voice	127	0	0 (1)	
Normal Voice Preset 1	63	0	0..127 (1..128)	
Preset 2	63	1	0..127 (1..128)	
Preset 3	63	2	0..127 (1..128)	
Preset 4	63	3	0..127 (1..128)	
Preset 5	63	4	0..127 (1..128)	
Preset 6	63	5	0..127 (1..128)	
Preset 7	63	6	0..127 (1..128)	
Preset 8	63	7	0..127 (1..128)	
User 1	63	8	0..127 (1..128)	
User 2	63	9	0..127 (1..128)	
User 3	63	10	0..127 (1..128)	
User 4	63	11	0..127 (1..128)	
Drum Voice Preset	63	32	0..63 (1..64)	
Drum Voice User	63	40	0..31 (1..32)	
Sample Voice	63	50	0..127 (1..128)	*5
Mixing Voice	63	60	0..15 (1..16)	*6
Performance User 1	63	64	0..127 (1..128)	
User 2	63	65	0..127 (1..128)	
User 3	63	66	0..127 (1..128)	
User 4	63	67	0..127 (1..128)	

*4 The default CONTROL NUMBERs of ASSIGNABLE CONTROLLER are as follows:

BREATH CONTROLLER	2
FOOT CONTROLLER 2	4
FOOT CONTROLLER 1	11
ASSIGN 1	16
ASSIGN 2	17
RIBBON CONTROLLER	22
ASSIGNABLE FUNCTION 1	86
ASSIGNABLE FUNCTION 2	87
FOOT SWITCH	88

*5 Can be selected only in the Song/Pattern mode. Up to 128 Sample Voices are available in a Song/Pattern.
*6 Can be selected only in the Song/Pattern mode. Up to 16 Mixing Voices are available in a Song/Pattern.
*7 When the sustain pedal is set to something other than "FC3 (Half On)," operating the sustain pedal transmits only values of 0 (off) or 127 (on).

PORTAMENTO TIME sets the time it takes for the pitch to reach the next note played when PORTAMENTO SWITCH is set to on.
PAN position relatively changes according to the preset value for each voice.
EFFECTS 1 DEPTH controls reverb send level.
EFFECTS 3 DEPTH controls chorus send level.
HARMONIC CONTENT adjusts the resonance preset for each voice.
Setting a value adds to or subtracts from the center value, 64, since it is an offset parameter.
The larger the value more resonant sound will be produced.
The effective range may be narrower than the range you can designate depending on the selected voice.
The parameters, EG ATTACK TIME, EG DECAY TIME, EG SUSTAIN LEVEL, EG RELEASE TIME adjust the envelopes preset for each voice.
Setting these values add to or subtract from the center value, 64, since these are offset parameters.
BRIGHTNESS adjusts the cutoff frequency preset for each voice.
Setting a value adds to or subtracts from the center value, 64, since it is an offset parameter.
The smaller the value the cutoff frequency will be lowered.
The effective range may be narrower than the range you can designate depending on the selected voice.
Bank Select will be actually executed when the Program Change message is received.
Bank Select and Program Change numbers that are not supported by Yamaha will be ignored.

(3-1-4) PROGRAM CHANGE

```
STATUS          1100nnnn (CnH)      n = 0 - 15 CHANNEL NUMBER
PROGRAM NUMBER  0ppppppp            p = 0 - 127
```

(3-1-5) CHANNEL AFTER TOUCH

```
STATUS          1101nnnn (DnH)      n = 0 - 15 CHANNEL NUMBER
VALUE           0vvvvvvv            v = 0 - 127 AFTER TOUCH VALUE
```

(3-1-6) PITCH BEND CHANGE

```
STATUS          1110nnnn (EnH)      n = 0 - 15 CHANNEL NUMBER
LSB             0vvvvvvv            PITCH BEND CHANGE LSB
MSB             0vvvvvvv            PITCH BEND CHANGE MSB
Transmitted with a resolution of 7 bits.
```

(3-2) CHANNEL MODE MESSAGES

```
STATUS          1011nnnn (BnH)      n = 0 - 15 CHANNEL NUMBER
CONTROL NUMBER  0ccccccc            c = CONTROL NUMBER
CONTROL VALUE   0vvvvvvv            v = DATA VALUE
```

(3-2-1) ALL SOUND OFF (CONTROL NUMBER = 78H, DATA VALUE = 0)

All the sounds currently played including the channel messages such as note-on and hold-on in a certain channel are muted when receiving this message.

(3-2-2) RESET ALL CONTROLLERS (CONTROL NUMBER = 79H, DATA VALUE = 0)

Resets the values set for the following controllers.

PITCH BEND CHANGE	0 (center)
CHANNEL AFTER TOUCH	0 (minimum)
MODULATION	0 (minimum)
EXPRESSION	127 (maximum)
BREATH CONTROLLER	127 (maximum)
FOOT CONTROLLER 1	127 (maximum)
FOOT CONTROLLER 2	127 (maximum)
FOOT SWITCH	0 (off)
ASSIGN 1	0 (center)
ASSIGN 2	0 (center)
RIBBON CONTROLLER	0 (center)
ASSIGNABLE FUNCTION 1	0 (off)
ASSIGNABLE FUNCTION 2	0 (off)
SUSTAIN SWITCH	0 (off)
SOSTENUTO SWITCH	0 (off)
RPN	Not assigned; No change

Doesn't reset the following data:
PROGRAM CHANGE, BANK SELECT MSB/LSB, VOLUME, PAN, HARMONIC CONTENT, SUSTAIN LEVEL, RELEASE TIME, ATTACK TIME,DECAY TIME, BRIGHTNESS, EFFECTS 1 DEPTH, EFFECTS 3 DEPTH,PORTAMENTO SWITCH, PITCH BEND SENSITIVITY, FINE TUNING, COARSE TUNING

(3-2-3) ALL NOTE OFF (CONTROL NUMBER = 7BH, DATA VALUE = 0)

All the notes currently set to on in certain channel(s) are muted when receiving this message.
However, if Sustain or Sostenuto is on, notes will continue sounding until these are turned off.

(3-2-4) OMNI MODE OFF (CONTROL NUMBER = 7CH, DATA VALUE = 0)

Performs the same function as when receiving ALL NOTES OFF.
Sets VOICE RECEIVE CHANNEL to "OMNI OFF," channel 1.

(3-2-5) OMNI MODE ON (CONTROL NUMBER = 7DH, DATA VALUE = 0)

Performs the same function as when receiving ALL NOTES OFF.
Sets VOICE RECEIVE CHANNEL to "OMNI ON."

(3-2-6) MONO (CONTROL NUMBER = 7EH, DATA VALUE = 0..16)

Performs the same function as when receiving ALL SOUNDS OFF.
If the 3rd byte (mono) is within 0 through 16, the channel will be Mode 4 (m = 1).
In the Voice mode, the mode can be Mode 2 (m = 1) according to VOICE RECEIVE CHANNEL.

(3-2-7) POLY (CONTROL NUMBER = 7FH, DATA VALUE = 0)

Performs the same function as when receiving ALL SOUNDS OFF. The channel will be Mode 3.
In the Voice mode, the mode can be Mode 1 according to VOICE RECEIVE CHANNEL.

(3-3) REGISTERED PARAMETER NUMBER

```
STATUS          1011nnnn (BnH)      n = 0 - 15 CHANNEL NUMBER
LSB             01100100 (64H)
RPN LSB         0ppppppp            p = RPN LSB (Refer to the table as shown below.)
MSB             01100101 (65H)
RPN MSB         0qqqqqqq            q = RPN MSB (Refer to the table as shown below.)
DATA ENTRY MSB  00000110 (06H)
DATA VALUE      0mmmmmmm            m = Data Value
DATA ENTRY LSB  00100110 (26H)
DATA VALUE      0llllllll           l = Data Value
```

First, designate the parameter using RPN MSB/LSB numbers. Then, set its value with data entry MSB/LSB.

```
RPN     D.ENTRY
LSB MSB MSB LSB  PARAMETER NAME            DATA RANGE
00H 00H mmH ---  PITCH BEND SENSITIVITY    00H - 18H (0 - 24 semitones)
01H 00H mmH llH  MASTER FINE TUNE          {mmH,llH}={00H,00H}-{40H,00H}-{7FH,7FH}
                                           (-8192*100/8192) - 0 - (+8191*100/8192)
02H 00H mmH ---  MASTER COARSE TUNE        28H - 40H - 58H (-24 - 0 - +24 semitones)
7FH 7FH --- ---  RPN RESET
                 RPN numbers will be left not designated.
                 The internal values are not affected.
```

(3-4) SYSTEM REAL TIME MESSAGES

(3-4-1) ACTIVE SENSING

```
STATUS          11111110 (FEH)
```

Transmitted at every 200 msec.
Once this code is received, the instrument starts sensing.
When no status nor data is received for over approximately 350 ms, MIDI receiving buffer will be cleared, and the sounds currently played is forcibly turned off.

(3-5) SYSTEM EXCLUSIVE MESSAGE

(3-5-1) UNIVERSAL NON REALTIME MESSAGE

(3-5-1-1) GENERAL MIDI MODE ON

```
F0H 7EH 7FH 09H 01H F7H
```

The internal tone generator block will receive this message when the instrument isin the Song/Pattern mode.

(3-5-1-2) IDENTITY REQUEST (Receive only)

```
F0H 7EH 0nH 06H 01H F7H
("n" = Device No. However, this instrument receives under "omni.")
```

(3-5-1-3) IDENTITY REPLY (Transmit only)

```
F0H 7EH 7FH 06H 02H 43H 00H 41H ddH ddH 00H 00H 00H 7FH F7H

dd;Device Number Code
MOTIF XF6: 41H 06H
MOTIF XF7: 42H 06H
MOTIF XF8: 43H 06H

mm: version
mm = (version no. - 1.0) * 10
e.g.) version 1.0 mm = (1.0 - 1.0) * 10 = 0
      version 1.5 mm = (1.5 - 1.0) * 10 = 5
```

(3-5-2) UNIVERSAL REALTIME MESSAGE

(3-5-2-1) MIDI MASTER VOLUME

```
F0H 7FH 7FH 04H 01H llH mmH F7H
```

Sets the MASTER VOLUME value.
The value "mm" is used to set the master volume (the value "ll" should be ignored).

(3-5-3) PARAMETER CHANGE

(3-5-3-1) NATIVE PARAMETER CHANGE, MODE CHANGE

```
11110000        F0          Exclusive Status
01000011        43          YAMAHA ID
0001nnnn        1n          Device Number
01111111        7F          Model ID
00010010        12          Model ID
0aaaaaaa        aaaaaaa     Address High
0aaaaaaa        aaaaaaa     Address Mid
0aaaaaaa        aaaaaaa     Address Low
0ddddddd        dddddddd    Data
|               |
11110111        F7          End of Exclusive
```

For parameters with data size of 2 or more, the appropriate number of data bytes will be transmitted.
See the following MIDI Data Table for Address.

(3-5-4) BULK DUMP

```
11110000        F0          Exclusive Status
01000011        43          YAMAHA ID
0000nnnn        0n          Device Number
01111111        7F          Model ID
00010010        12          Model ID
0bbbbbbb        bbbbbbbb    Byte Count
0bbbbbbb        bbbbbbbb    Byte Count
0aaaaaaa        aaaaaaa     Address High
0aaaaaaa        aaaaaaa     Address Mid
0aaaaaaa        aaaaaaa     Address Low
0               0           Data
|               |
0ccccccc        ccccccc     Check-sum
11110111        F7          End of Exclusive
```

See the following BULK DUMP Table for Address and Byte Count.
The Check sum is the value that results in a value of 0 for the lower 7 bits when the Byte Count, Start Address, Data and Check sum itself are added.

(3-5-5) DUMP REQUEST

```
11110000        F0          Exclusive Status
01000011        43          YAMAHA ID
0010nnnn        2n          Device Number
01111111        7F          Model ID
00010010        12          Model ID
0aaaaaaa        aaaaaaa     Address High
0aaaaaaa        aaaaaaa     Address Mid
0aaaaaaa        aaaaaaa     Address Low
11110111        F7          End of Exclusive
```

See the following DUMP REQUEST Table for Address and Byte Count.

(3-5-6) PARAMETER REQUEST

```
11110000        F0          Exclusive Status
01000011        43          YAMAHA ID
0011nnnn        3n          Device Number
01111111        7F          Model ID
00010010        12          Model ID
0aaaaaaa        aaaaaaa     Address High
0aaaaaaa        aaaaaaa     Address Mid
0aaaaaaa        aaaaaaa     Address Low
11110111        F7          End of Exclusive
```

See the following MIDI Data Table for Address.

(4) SYSTEM OVERVIEW (Keyboard, Sequencer and Tone Generator)

MIDI Device = MIDI

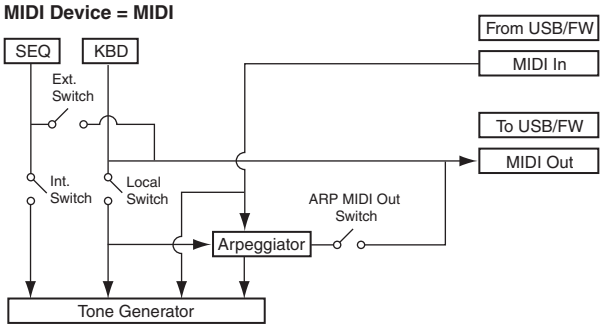

MIDI Device = USB/FW

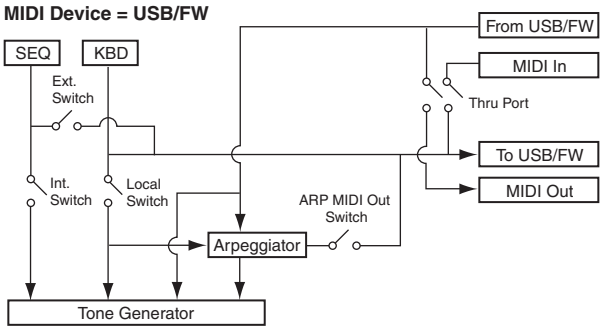

Although three types of note on/note off data, received via MIDI, played by the internal sequencer and played on the keyboard will be distinguished, the other controllers (channel messages) equally affect the entire notes.

ALL SOUND OFF clears all the sounds in the specific channel(s) played by both the keyboard and the data via MIDI.
ALL NOTES OFF received via MIDI clears the sounds in the specific channel(s) played via MIDI.

MIDI Data Table

Bank Select

Available Bank Select/Program Change

MSB	(HEX)	LSB	(HEX)	Program No.	Type	Memory	Description
0	00	0	00	0 – 127	Normal Voice	GM Voice	
127	7F	0	00	0	Drum Voice	GM Drum	
63	3F	0	00	0 – 127	Normal Voice	Preset 1	
		1	01	0 – 127		Preset 2	
		2	02	0 – 127		Preset 3	
		3	03	0 – 127		Preset 4	
		4	04	0 – 127		Preset 5	
		5	05	0 – 127		Preset 6	
		6	06	0 – 127		Preset 7	
		7	07	0 – 127		Preset 8	
		8	08	0 – 127		User 1	
		9	09	0 – 127		User 2	
		10	0A	0 – 127		User 3	
		11	0B	0 – 127		User 4	
		32	20	0 – 63	Drum Voice	Preset	
		40	28	0 – 31		User	
		50	32	0 – 127	Sample Voice	User	Can be selected in the Song/ Pattern mode.
		60	3C	0 – 15	Mixing Voice	User	Can be selected in the Song/ Pattern mode.
63	3F	64	40	0 – 127	Performance	User 1	
		65	41	0 – 127		User 2	
		66	42	0 – 127		User 3	
		67	43	0 – 127		User 4	

When only the Program Change is received after entering any of the mode, the corresponding voice in the currently selected Type/Memory is called up.
The Master number and the Performance/Song/Pattern/Voice mode can be changed only via the Parameter Change.
The Song/Pattern can be changed only via the Song Select (Song: F3, 00 – F3, 3F / Pattern: F3, 00 – F3, 3F).
In the Performance mode, the Part Voice cannot be changed via the Program Change.

Parameter Base Address

Parameter Block	Top Address H	Top Address M	Top Address L	Description
SYSTEM	00	00	00	System
	00	03	00	Insertion A for Voice A/D
	00	04	00	Insertion B for Voice A/D
	00	20	00	Master EQ for Voice
	00	21	00	Master Effect for Voice
	00	3n	00	Micro Tuning User Table
	00	5n	00	Micro Tuning User Table Name
	00	40	00	Audio In Part 1 (A/D)
	00	41	00	Audio In Part 2 (FW)
MODE CHANGE	0A	00	00	Mode Change
PART SET CONTROL for MIX VOICE	0D	00	00	Part Set control for Mix Voice
BULK CONTROL	0E	00	00	Header
	0F	00	00	Footer
MASTER KEYBOARD	33	00	00	Common
	32	00	00	Zone 1
				:
	32	07	00	Zone 8
PERFORMANCE COMMON	30	00	00	Performance Common
	30	01	00	Reverb
	30	02	00	Chorus
	30	03	00	Insertion A for A/D
	30	04	00	Insertion B for A/D
	30	10	00	Master EQ
	30	11	00	Master Effect
	30	30	00	Arpeggio Common
PERFORMANCE PART	31	00	00	Part 1
				:
	31	03	00	Part 4
	34	00	00	Arpeggio Part 1
				:
	34	03	00	Arpeggio Part 4
	35	40	00	Audio In Part 1 (A/D)
	35	41	00	Audio In Part 2 (FW)
MULTI COMMON	36	00	00	Multi Common
	36	01	00	Reverb
	36	02	00	Chorus
	36	03	00	Insertion A for A/D
	36	04	00	Insertion B for A/D
	36	10	00	Master EQ
	36	11	00	Master Effect
	36	30	00	Arpeggio Common
MULTI PART	37	00	00	Part 1
				:
	37	0F	00	Part 16
	38	00	00	Arpeggio Part 1
				:
	38	0F	00	Arpeggio Part 16
	39	40	00	Audio In Part 1 (A/D)
	39	41	00	Audio In Part 2 (FW)
NORMAL VOICE COMMON	40	00	00	Common 1
	40	01	00	Reverb
	40	02	00	Chorus
	40	03	00	Insertion A
	40	04	00	Insertion B
	40	05	00	Insertion L
	40	06	00	Controller+LFO
	40	30	00	Arpeggio
NORMAL VOICE ELEMENT GROUP 1	41	ee	00	ee: Element No. (0 – 7)
NORMAL VOICE ELEMENT GROUP 2	42	ee	00	ee: Element No. (0 – 7)
DRUM COMMON	46	00	00	Common 1
	46	01	00	Reverb
	46	02	00	Chorus
	46	03	00	Insertion A
	46	04	00	Insertion B
	46	05	00	Insertion L
	46	08	00	Controller
	46	30	00	Arpeggio
DRUM ELEMENT GROUP 1	47	ee	00	ee: Element No. (0 – 72)

Bulk Dump Block

"Top Address" indicates the top address of each block designated by bulk dump operation. "Byte Count" indicates the data size contained in each block designated by bulk dump operation.

The Block from the Bulk Header to the Bulk Footer of the Performance and Voice can be received regardless their order. They can be received even if all of them are not transmitted. They cannot be received if the irrelevant Block is included.

To execute 1 Performance/1 Voice bulk dump request, designate its corresponding Bulk Header address.

When the Multiple Bulk Control Footer is received, the data of Masters, Performances, and Voices will be saved to the Flash ROM.

For the information about "mm" and "nn" shown in the following list, refer to MIDI PARAMETER CHANGE TABLE (BULK CONTROL) below.

Parameter Block	Description	Byte Count		Top Address		
		Dec	Hex	H	M	L
SYSTEM	System	52	0034	00	00	00
	Insertion A for Voice A/D	35	0023	00	03	00
	Insertion B for Voice A/D	35	0023	00	04	00
	Master EQ for Voice	20	0014	00	20	00
	Master Effect for Voice	36	0024	00	21	00
MICRO TUNING	Table 1	24	0018	00	30	00
	:	8 Blocks		:	:	:
	Table 8	24	0018	00	37	00
MICRO TUNING NAME	Table 1	20	0014	00	50	00
	:	8 Blocks		:	:	:
	Table 8	20	0014	00	57	00
AUDIO IN PART	Audio Input (A/D)	8	0008	00	40	00
	Audio Input (FW)	8	0008	00	41	00
MASTER KEYBOARD	Bulk Header	0	00	0E	mm	nn
	Common	31	001F	33	00	00
	Zone 1	37	0025	32	00	00
	:	8 Blocks		:	:	:
	Zone 8	37	0025	32	07	00
	Bulk Footer	0	00	0F	mm	nn
PERFORMANCE	Bulk Header	0	00	0E	mm	nn
COMMON	Common	81	0051	30	00	00
	Reverb	37	0025	30	01	00
	Chorus	38	0026	30	02	00
	Insertion A for A/D	35	0023	30	03	00
	Insertion B for A/D	35	0023	30	04	00
	Master EQ	20	0014	30	10	00
	Master Effect	36	0024	30	11	00
	Arpeggio Common	13	000D	30	30	00
PART	Part 1	63	003F	31	00	00
	:	4 Blocks		:	:	:
	Part 4	63	003F	31	03	00
	Arpeggio Part 1	66	0042	34	00	00
	:	4 Blocks		:	:	:
	Arpeggio Part 4	66	0042	34	03	00
AUDIO IN PART	Audio In Part 1 (A/D)	8	0008	35	40	00
	Audio In Part 2 (FW)	8	0008	35	41	00
	Bulk Footer	0	00	0F	mm	nn
MULTI	Bulk Header	0	00	0E	mm	nn
COMMON	Common	81	0051	36	00	00
	Reverb	37	0025	36	01	00
	Chorus	38	0026	36	02	00
	Insertion A for A/D	35	0023	36	03	00
	Insertion B for A/D	35	0023	36	04	00
	Master EQ	20	0014	36	10	00
	Master Effect	36	0024	36	11	00
	Arpeggio Common	13	000D	36	30	00
PART	Part 1	63	003F	37	00	00
	:	16 Blocks		:	:	:
	Part 16	63	003F	37	0F	00
	Arpeggio Part 1	66	0042	38	00	00
	:	16 Blocks		:	:	:
	Arpeggio Part 16	66	0042	38	0F	00
AUDIO IN PART	Audio In Part 1 (A/D)	8	0008	39	40	00
	Audio In Part 2 (FW)	8	0008	39	41	00
	Bulk Footer	0	00	0F	mm	nn

Parameter Block	Description	Byte Count		Top Address		
		Dec	Hex	H	M	L
VOICE (NORMAL)	Bulk Header	0	00	0E	mm	nn
COMMON	Common	82	0052	40	00	00
	Reverb	37	0025	40	01	00
	Chorus	38	0026	40	02	00
	Insertion A	35	0023	40	03	00
	Insertion B	35	0023	40	04	00
	Insertion L	67	0043	40	05	00
	Controller + LFO	69	0045	40	06	00
	Arpeggio	79	004F	40	30	00
ELEMENT 1	Oscillator + Amplitude + Pitch	95	005F	41	00	00
	Filter + EQ + LFO	70	0046	42	00	00
ELEMENT 2	Oscillator + Amplitude + Pitch	95	005F	41	01	00
	Filter + EQ + LFO	70	0046	42	01	00
ELEMENT 3	Oscillator + Amplitude + Pitch	95	005F	41	02	00
	Filter + EQ + LFO	70	0046	42	02	00
ELEMENT 4	Oscillator + Amplitude + Pitch	95	005F	41	03	00
	Filter + EQ + LFO	70	0046	42	03	00
ELEMENT 5	Oscillator + Amplitude + Pitch	95	005F	41	04	00
	Filter + EQ + LFO	70	0046	42	04	00
ELEMENT 6	Oscillator + Amplitude + Pitch	95	005F	41	05	00
	Filter + EQ + LFO	70	0046	42	05	00
ELEMENT 7	Oscillator + Amplitude + Pitch	95	005F	41	06	00
	Filter + EQ + LFO	70	0046	42	06	00
ELEMENT 8	Oscillator + Amplitude + Pitch	95	005F	41	07	00
	Filter + EQ + LFO	70	0046	42	07	00
	Bulk Footer	0	00	0F	mm	nn
VOICE (DRUM)	Bulk Header	0	00	0E	mm	nn
COMMON	Common	74	004A	46	00	00
	Reverb	37	0025	46	01	00
	Chorus	38	0026	46	02	00
	Insertion A	35	0023	46	03	00
	Insertion B	35	0023	46	04	00
	Insertion L	67	0043	46	05	00
	Controller	30	001E	46	08	00
	Arpeggio	79	004F	46	30	00
KEY C 0	Key	47	002F	47	00	00
	:	73 Blocks		:	:	:
KEY C 6	Key	47	002F	47	48	00
	Bulk Footer	0	00	0F	mm	nn

MIDI PARAMETER CHANGE TABLE (Mode Change)

Address			Size	Data Range (HEX)	Parameter Name	Description	Notes
0A	00	00	1	00 – 7F	Master Number Select	0 – 127	
		01	1	00 – 04	Mode Change	0: Voice, 1: Performance, 2: Pattern (Multi), 3: Song (Multi), 4: Master	

MIDI PARAMETER CHANGE TABLE (Part Set Control for Mix Voice)

Address			Size	Data Range (HEX)	Parameter Name	Description	Notes
0D	00	00	1	00 – 0F	Part Set Control for Mix Voice	0 – 15	

MIDI PARAMETER CHANGE TABLE (BULK CONTROL)

Address			Size	Data Range (HEX)	Parameter Name	Description	Notes
0E	00	nn	1	-	Bulk Header	Normal Voice PRE 1 (nn = 0 – 127)	
	01	nn	1	-		Normal Voice PRE 2 (nn = 0 – 127)	
	02	nn	1	-		Normal Voice PRE 3 (nn = 0 – 127)	
	03	nn	1	-		Normal Voice PRE 4 (nn = 0 – 127)	
	04	nn	1	-		Normal Voice PRE 5 (nn = 0 – 127)	
	05	nn	1	-		Normal Voice PRE 6 (nn = 0 – 127)	
	06	nn	1	-		Normal Voice PRE 7 (nn = 0 – 127)	
	07	nn	1	-		Normal Voice PRE 8 (nn = 0 – 127)	
	09	nn	1	-		Normal Voice GM (nn = 0 – 127)	
	0A	nn	1	-		Normal Voice USER 1 (nn = 0 – 127)	
	0B	nn	1	-		Normal Voice USER 2 (nn = 0 – 127)	
	0C	nn	1	-		Normal Voice USER 3 (nn = 0 – 127)	
	0D	nn	1	-		Normal Voice USER 4 (nn = 0 – 127)	
	0F	nn	1	-		Normal Voice Edit Buffer (nn = 0)	
	20	nn	1	-		Drum Voice PRE (nn = 0 – 63)	
	21	nn	1	-		Drum Voice GM (nn = 0)	
	28	nn	1	-		Drum Voice USER (nn = 0 – 31)	
	29	nn	1	-		reserved	
	2F	nn	1	-		Drum Voice Edit Buffer (nn = 0)	
	30	nn	1	-		Mixing Voice Edit Buffer (nn = 0 – 15) nn: part	
	31	nn	1	-		Mixing Voice (Current Song/Patt) (nn = 0 – 15) nn: Voice Number	
	40	nn	1	-		Performance USER 1 (nn = 0 – 127)	
	41	nn	1	-		Performance USER 2 (nn = 0 – 127)	
	42	nn	1	-		Performance USER 3 (nn = 0 – 127)	
	43	nn	1	-		Performance USER 4 (nn = 0 – 127)	
	4F	nn	1	-		Performance Edit Buffer (nn = 0)	
	5F	nn	1	-		Multi Edit Buffer (nn = 0)	
	70	nn	1	-		Master USER (nn = 0 – 127)	
	7F	nn	1	-		Master Edit Buffer (nn = 0)	
0F	00	nn	1	-	Bulk Footer	Normal Voice PRE 1 (nn = 0 – 127)	
	01	nn	1	-		Normal Voice PRE 2 (nn = 0 – 127)	
	02	nn	1	-		Normal Voice PRE 3 (nn = 0 – 127)	
	03	nn	1	-		Normal Voice PRE 4 (nn = 0 – 127)	
	04	nn	1	-		Normal Voice PRE 5 (nn = 0 – 127)	
	05	nn	1	-		Normal Voice PRE 6 (nn = 0 – 127)	
	06	nn	1	-		Normal Voice PRE 7 (nn = 0 – 127)	
	07	nn	1	-		Normal Voice PRE 8 (nn = 0 – 127)	
	09	nn	1	-		Normal Voice GM (nn = 0 – 127)	
	0A	nn	1	-		Normal Voice USER 1 (nn = 0 – 127)	
	0B	nn	1	-		Normal Voice USER 2 (nn = 0 – 127)	
	0C	nn	1	-		Normal Voice USER 3 (nn = 0 – 127)	
	0D	nn	1	-		Normal Voice USER 4 (nn = 0 – 127)	
	0F	nn	1	-		Normal Voice Edit Buffer (nn = 0)	
	20	nn	1	-		Drum Voice PRE (nn = 0 – 63)	
	21	nn	1	-		Drum Voice GM (nn = 0)	
	28	nn	1	-		Drum Voice USER (nn = 0 – 31)	
	29	nn	1	-		reserved	
	2F	nn	1	-		Drum Voice Edit Buffer (nn = 0)	
	30	nn	1	-		Mixing Voice Edit Buffer (nn = 0 – 15) nn: part	
	31	nn	1	-		Mixing Voice (Current Song/Patt) (nn = 0 – 15) nn: Voice Number	
	40	nn	1	-		Performance USER 1 (nn = 0 – 127)	
	41	nn	1	-		Performance USER 2 (nn = 0 – 127)	
	42	nn	1	-		Performance USER 3 (nn = 0 – 127)	
	43	nn	1	-		Performance USER 4 (nn = 0 – 127)	
	4F	nn	1	-		Performance Edit Buffer (nn = 0)	
	5F	nn	1	-		Multi Edit Buffer (nn = 0)	
	70	nn	1	-		Master USER (nn = 0 – 127)	
	7F	nn	1	-		Master Edit Buffer (nn = 0)	

MIDI PARAMETER CHANGE TABLE (SYSTEM)

Address			Size	Data Range (HEX)	Parameter Name	Description	Notes
00	00	00	1	00 – 7F	Master Volume	0 – 127	MIDI Master Volume
		01	1	28 – 58	Master Note Shift	-24 – +24 [semitones]	
		02	4	00 – 00 00 – 07 00 – 0F 00 – 0F	Master Tune	-102.4 – +102.3 [cent] 1st bit 3-0 → bit 15-12 2nd bit 3-0 → bit 11-8 3rd bit 3-0 → bit 7-4 4th bit 3-0 → bit 3-0	MIDI Master Tuning
		06	1	00 – 01	Controller Reset	hold, reset	
		07	1	35 – 4B	Master Transpose	-11 – +11 (semitones)	
		08	1	3D – 43	Master Octave Shift	-3 – +3	
		09	1	00 – 01	Local Switch	off, on	
		0A	1	00 – 10, 7F	Basic Receive Channel	1 – 16, omni, off	
		0B	1	00 – 0F, 7F	Keyboard Transmit Channel	1 – 16, off	
		0C	1		reserved		
		0D	1	00 – 01	Stereo L&R Output Gain	00: 0dB, 01: +6dB	
		0E	1	00 – 01	Assign Out L&R Output Gain	00: 0dB, 01: +6dB	
		0F	1	00 – 7F	FW Individual Output Gain	bit 0: 0, +6dB 1&2, bit 1: 0, +6dB 3&4, ..., bit 6: 0, +6dB 13&14	
		10	1		reserved		
		11	1	00 – 04	Keyboard Velocity Curve	norm, soft, hard, wide, fixed	
		12	1	01 – 7F	Keyboard Fixed Velocity	1 – 127	
		13	1		reserved		
		14	1	00 – 01	Receive/Transmit Bank Select	off, on	
		15	1	00 – 01	Receive/Transmit Program Change	off, on	
		16	1		reserved		
		17	1		reserved		
		18	1	00 – 02	MIDI IN/OUT	MIDI, USB, FW	
		19	1	00 – 03	Effect On/Off for System Effect	bit 0: reverb, bit 1: chorus	
		1A	1		reserved		
		1B	1		reserved		
		1C	1		reserved		
		1D	1	00 – 01	Auto Load Switch	off, on	
		1E	1	00 – 04	Power on Mode	performance, voice (USER 1), voice (PRE 1), voice (GM), master	
		1F	1	00 – 12	Bulk Interval	0 – 900ms	
		20	1		reserved		
		21	1		reserved		
		22	1		reserved		
		23	1	01 – 02	A/D Input Insertion Connect Type	insA→B, insB→A	
		24	1	00 – 01	A/D Input Gain	mic, line	
		25	1		reserved		
		26	1		reserved		
		27	1	00 – 02	FW Monitor Setup	stand alone, with PC, with PC (Direct Monitor)	
		28	1	00 – 01	ARP MIDI Out Switch	off, on	for Voice Mode
		29	1	00 – 0F	ARP MIDI Out Channel	1 – 16	:
		2A	1	00 – 5F	RB Control Number	off, 1 – 95	
		2B	1	00 – 64	FS Assign	off, 1 – 95, arp sw, play/stop, pc inc, pc dec, octave reset	
		2C	1	00 – 5F	Assign1 Control Number	off, 1 – 95	
		2D	1	00 – 5F	Assign2 Control Number	off, 1 – 95	
		2E	1	00 – 5F	BC Control Number	off, 1 – 95	
		2F	1	00 – 5F	FC1 Control Number	off, 1 – 95	
		30	1	00 – 5F	FC2 Control Number	off, 1 – 95	
		31	1	00 – 5F	Assignable Function 1 Assign	off, 1 – 95	
		32	1	00 – 5F	Assignable Function 2 Assign	off, 1 – 95	
		33	1	00 – 02	Sustain Pedal Select	FC3 (Half On), FC3 (Half Off), FC4/5	

TOTAL SIZE = 52 34 (HEX)

Address			Size	Data Range (HEX)	Parameter Name	Description	Notes
00	pp	00	1	00 – 03	Audio Input Mode	L mono, R mono, L+R mono, stereo	
		01	1	00 – 7F	Audio Input Part Volume	0 – 127	
		02	1	01 – 7F	Audio Input Part Pan	L63 – C – R63	
		03	1	00 – 7F	Audio Input Part Reverb Send	0 – 127	
		04	1	00 – 7F	Audio Input Part Chorus Send	0 – 127	
		05	1	00 – 7F	reserved		
		06	1	00 – 7F	Audio Input Part Dry Level	0 – 127	
		07	1	00 – 70	Audio Input Part Output Select	0: L&R, 8: asnL&R, 9-15: FW1&2 … FW13&14, 64-79: asnL, asnR, FW1 … FW14, 112: insL	The FW input Part Output Select cannot be set to "112: insL."

TOTAL SIZE = 8 08 (HEX)

pp = part number
40 – 41 Audio In Part (A/D, FW)

Address			Size	Data Range (HEX)	Parameter Name	Description	Notes
00	03	00	2	00 – 7F 00 – 7F	Insertion-A Type MSB Insertion-A Type LSB	Refer to "Effect Parameter List."	for A/D
		02	1	00 – 7F	Insertion-A Template Number		
		03	2	00 – 7F 00 – 7F	Insertion-A Parameter 1 MSB Insertion-A Parameter 1 LSB	:	:
		:	:	:	:	:	:
		17	2	00 – 7F 00 – 7F	Insertion-A Parameter 11 MSB Insertion-A Parameter 11 LSB	:	:
		19	2	00 – 7F 00 – 7F	Insertion-A Parameter 12 MSB Insertion-A Parameter 12 LSB	:	:
		1B	2	00 – 7F 00 – 7F	Insertion-A Parameter 13 MSB Insertion-A Parameter 13 LSB	:	:
		1D	2	00 – 7F 00 – 7F	Insertion-A Parameter 14 MSB Insertion-A Parameter 14 LSB	:	:
		1F	2	00 – 7F 00 – 7F	Insertion-A Parameter 15 MSB Insertion-A Parameter 15 LSB	:	:
		21	2	00 – 7F 00 – 7F	Insertion-A Parameter 16 MSB Insertion-A Parameter 16 LSB	:	:

TOTAL SIZE = 35 23 (HEX)

Address			Size	Data Range (HEX)	Parameter Name	Description	Notes
00	04	00	2	00 – 7F 00 – 7F	Insertion-B Type MSB Insertion-B Type LSB	Refer to "Effect Parameter List."	for A/D
		02	1	00 – 7F	Insertion-B Template Number		
		03	2	00 – 7F 00 – 7F	Insertion-B Parameter 1 MSB Insertion-B Parameter 1 LSB	:	:
		:	:	:	:	:	:
		17	2	00 – 7F 00 – 7F	Insertion-B Parameter 11 MSB Insertion-B Parameter 11 LSB	:	:
		19	2	00 – 7F 00 – 7F	Insertion-B Parameter 12 MSB Insertion-B Parameter 12 LSB	:	:
		1B	2	00 – 7F 00 – 7F	Insertion-B Parameter 13 MSB Insertion-B Parameter 13 LSB	:	:
		1D	2	00 – 7F 00 – 7F	Insertion-B Parameter 14 MSB Insertion-B Parameter 14 LSB	:	:
		1F	2	00 – 7F 00 – 7F	Insertion-B Parameter 15 MSB Insertion-B Parameter 15 LSB	:	:
		21	2	00 – 7F 00 – 7F	Insertion-B Parameter 16 MSB Insertion-B Parameter 16 LSB	:	:

TOTAL SIZE = 35 23 (HEX)

Address			Size	Data Range (HEX)	Parameter Name	Description	Notes
00	20	00	1	34 – 4C	EQ Gain 1	-12 – +12 [dB]	for Voice Mode
		01	1	04 – 28	EQ Frequency 1	32 – 2000 [Hz]	:
		02	1	01 – 78	EQ Q1	0.1 – 12.0	:
		03	1	00 – 01	EQ Shape 1	shelv, peak	:
		04	1	34 – 4C	EQ Gain 2	-12 – +12 [dB]	:
		05	1	0E – 36	EQ Frequency 2	100 – 10.0 [kHz]	:
		06	1	01 – 78	EQ Q2	0.1 – 12.0	:
			1	01	reserved		:
		08	1	34 – 4C	EQ Gain 3	-12 – +12 [dB]	:
		09	1	0E – 36	EQ Frequency 3	100 – 10.0 [kHz]	:
		0A	1	01 – 78	EQ Q3	0.1 – 12.0	:
			1		reserved		:
		0C	1	34 – 4C	EQ Gain 4	-12 – +12 [dB]	:
		0D	1	0E – 36	EQ Frequency 4	100 – 10.0 [kHz]	:
		0E	1	01 – 78	EQ Q4	0.1 – 12.0	:
			1		reserved		:
		10	1	34 – 4C	EQ Gain 5	-12 – +12 [dB]	:
		11	1	1C – 3A	EQ Frequency 5	0.5 – 16.0 [kHz]	:
		12	1	01 – 78	EQ Q5	0.1 – 12.0	:
		13	1	00 – 01	EQ Shape 5	shelv, peak	:

TOTAL SIZE = 20 14 (HEX)

Address			Size	Data Range (HEX)	Parameter Name	Description	Notes
00	21	00	2	00 – 7F 00 – 7F	Master Effect Type MSB Master Effect Type LSB	Refer to "Effect Parameter List."	for Voice Mode
		02	1	00 – 7F	Master Effect Template Number		
		03	2	00 – 7F 00 – 7F	Master Effect Parameter 1 MSB Master Effect Parameter 1 LSB	:	:
		:	:	:	:	:	:
		17	2	00 – 7F 00 – 7F	Master Effect Parameter 11 MSB Master Effect Parameter 11 LSB	:	:
		19	2	00 – 7F 00 – 7F	Master Effect Parameter 12 MSB Master Effect Parameter 12 LSB	:	:
		1B	2	00 – 7F 00 – 7F	Master Effect Parameter 13 MSB Master Effect Parameter 13 LSB	:	:
		1D	2	00 – 7F 00 – 7F	Master Effect Parameter 14 MSB Master Effect Parameter 14 LSB	:	:
		1F	2	00 – 7F 00 – 7F	Master Effect Parameter 15 MSB Master Effect Parameter 15 LSB	:	:
		21	2	00 – 7F 00 – 7F	Master Effect Parameter 16 MSB Master Effect Parameter 16 LSB	:	:
		23	1	00 – 01	Master Effect ON/OFF	off, on	:

TOTAL SIZE = 36 24 (HEX)

Address			Size	Data Range (HEX)	Parameter Name	Description	Notes
00	3n	00	2	00 – 01 00 – 7F	Micro Tuning C MSB Micro Tuning C LSB	-99 – 0 – +99 [cent] 1st bit6-0→ bit13-7 2nd bit6-0 → bit6-0	
		02	2	00 – 01 00 – 7F	Micro Tuning C# MSB Micro Tuning C# LSB	:	
		04	2	00 – 01 00 – 7F	Micro Tuning D MSB Micro Tuning D LSB	:	
		06	2	00 – 01 00 – 7F	Micro Tuning D# MSB Micro Tuning D# LSB	:	
		08	2	00 – 01 00 – 7F	Micro Tuning E MSB Micro Tuning E LSB	:	
		0A	2	00 – 01 00 – 7F	Micro Tuning F MSB Micro Tuning F LSB	:	
		0C	2	00 – 01 00 – 7F	Micro Tuning F# MSB Micro Tuning F# LSB	:	
		0E	2	00 – 01 00 – 7F	Micro Tuning G MSB Micro Tuning G LSB	:	
		10	2	00 – 01 00 – 7F	Micro Tuning G# MSB Micro Tuning G# LSB	:	
		12	2	00 – 01 00 – 7F	Micro Tuning A MSB Micro Tuning A LSB	:	
		14	2	00 – 01 00 – 7F	Micro Tuning A# MSB Micro Tuning A# LSB	:	
		16	2	00 – 01 00 – 7F	Micro Tuning B MSB Micro Tuning B LSB	:	

TOTAL SIZE = 24 18 (HEX)

n = user table number
00 – 07 Table 1 – 8

Address			Size	Data Range (HEX)	Parameter Name	Description	Notes
00	5n	00	1	00, 20 – 7E	Micro Tuning Table Name 1	0, 32..126 (ASCII)	
		01	1	00, 20 – 7E	Micro Tuning Table Name 2	0, 32..126 (ASCII)	
		02	1	00, 20 – 7E	Micro Tuning Table Name 3	0, 32..126 (ASCII)	
		03	1	00, 20 – 7E	Micro Tuning Table Name 4	0, 32..126 (ASCII)	
		04	1	00, 20 – 7E	Micro Tuning Table Name 5	0, 32..126 (ASCII)	
		05	1	00, 20 – 7E	Micro Tuning Table Name 6	0, 32..126 (ASCII)	
		06	1	00, 20 – 7E	Micro Tuning Table Name 7	0, 32..126 (ASCII)	
		07	1	00, 20 – 7E	Micro Tuning Table Name 8	0, 32..126 (ASCII)	
		08	1	00, 20 – 7E	Micro Tuning Table Name 9	0, 32..126 (ASCII)	
		09	1	00, 20 – 7E	Micro Tuning Table Name 10	0, 32..126 (ASCII)	
		0A	1	00, 20 – 7E	Micro Tuning Table Name 11	0, 32..126 (ASCII)	
		0B	1	00, 20 – 7E	Micro Tuning Table Name 12	0, 32..126 (ASCII)	
		0C	1	00, 20 – 7E	Micro Tuning Table Name 13	0, 32..126 (ASCII)	
		0D	1	00, 20 – 7E	Micro Tuning Table Name 14	0, 32..126 (ASCII)	
		0E	1	00, 20 – 7E	Micro Tuning Table Name 15	0, 32..126 (ASCII)	
		0F	1	00, 20 – 7E	Micro Tuning Table Name 16	0, 32..126 (ASCII)	
		10	1	00, 20 – 7E	Micro Tuning Table Name 17	0, 32..126 (ASCII)	
		11	1	00, 20 – 7E	Micro Tuning Table Name 18	0, 32..126 (ASCII)	
		12	1	00, 20 – 7E	Micro Tuning Table Name 19	0, 32..126 (ASCII)	
		13	1	00, 20 – 7E	Micro Tuning Table Name 20	0, 32..126 (ASCII)	

TOTAL SIZE = 20 14 (HEX)

n = user table number
00 – 07 Table 1 – 8

MIDI PARAMETER CHANGE TABLE (MASTER KEYBOARD)

Address			Size	Data Range (HEX)	Parameter Name	Description	Notes
33	00	00	1	00, 20 – 7E	Master Name 1	0, 32 – 126 (ASCII)	
		01	1	00, 20 – 7E	Master Name 2	0, 32 – 126 (ASCII)	
		02	1	00, 20 – 7E	Master Name 3	0, 32 – 126 (ASCII)	
		03	1	00, 20 – 7E	Master Name 4	0, 32 – 126 (ASCII)	
		04	1	00, 20 – 7E	Master Name 5	0, 32 – 126 (ASCII)	
		05	1	00, 20 – 7E	Master Name 6	0, 32 – 126 (ASCII)	
		06	1	00, 20 – 7E	Master Name 7	0, 32 – 126 (ASCII)	
		07	1	00, 20 – 7E	Master Name 8	0, 32 – 126 (ASCII)	
		08	1	00, 20 – 7E	Master Name 9	0, 32 – 126 (ASCII)	
		09	1	00, 20 – 7E	Master Name 10	0, 32 – 126 (ASCII)	
		0A	1	00, 20 – 7E	Master Name 11	0, 32 – 126 (ASCII)	
		0B	1	00, 20 – 7E	Master Name 12	0, 32 – 126 (ASCII)	
		0C	1	00, 20 – 7E	Master Name 13	0, 32 – 126 (ASCII)	
		0D	1	00, 20 – 7E	Master Name 14	0, 32 – 126 (ASCII)	
		0E	1	00, 20 – 7E	Master Name 15	0, 32 – 126 (ASCII)	
		0F	1	00, 20 – 7E	Master Name 16	0, 32 – 126 (ASCII)	
		10	1	00, 20 – 7E	Master Name 17	0, 32 – 126 (ASCII)	
		11	1	00, 20 – 7E	Master Name 18	0, 32 – 126 (ASCII)	
		12	1	00, 20 – 7E	Master Name 19	0, 32 – 126 (ASCII)	
		13	1	00, 20 – 7E	Master Name 20	0, 32 – 126 (ASCII)	
		14	1		reserved		
		15	1		reserved		
		16	1		reserved		
		17	1		reserved		
		18	1		reserved		
		19	1	00 – 03	Mode Change	0=voice 1=performance 2=pattern 3=song	
		1A	1	00 – 7F	Bank MSB for Voice/Perf Mode	0 – 127	
		1B	1	00 – 7F	Bank LSB for Voice/Perf Mode	0 – 127	
		1C	1	00 – 7F	Program Number	1 – 128	
		1D	1	00 – 01	Zone on/off	off, on	
		1E	1	00 – 06	Knob/Slider Function Select	0=tone1, 1=tone2, 2=ARP FX, 3=reverb, 4=chorus, 5=pan, 6=zone	

TOTAL SIZE = 31 1F (HEX)

Address			Size	Data Range (HEX)	Parameter Name	Description	Notes
32	nn	00	1	00 – 3F	Transmit Channel, MIDI/TG Switch	bit6: reserved bit5: TG off, on bit4: MIDI off, on bit0-3: Ch1..16	
		01	1	3D – 43	Transpose (Octave)	-3 – +3	
		02	1	35 – 4B	Transpose (Semitone)	-11 – +11 (semitones)	
		03	1	00 – 7F	Note Limit Low	C-2 – G8	
		04	1	00 – 7F	Note Limit High	C-2 – G8	
		05	1		reserved		
		06	1	00 – 7F	MIDI Volume	0 – 127	
		07	1	00 – 7F	MIDI Pan	0 – 127	
		08	1	00 – 7F	MIDI Bank MSB	0 – 127	
		09	1	00 – 7F	MIDI Bank LSB	0 – 127	
		0A	1	00 – 7F	MIDI Program Number	1 – 128	
		0B	1	00 – 1F	Transmit Program Change for MIDI Transmit Bank Select for MIDI Transmit RB Transmit Program Change for TG Transmit Bank Select for TG	bit6-5: reserved bit4: off, on Program Change for MIDI bit3: off, on Bank Select for MIDI bit2: off, on RB bit1: off, on Program Change for TG bit0: off, on Bank Select for TG	
		0C	1	00 – 7F	Transmit PB Transmit AT Transmit Assignable Function 2 Transmit Assignable Function 1 Transmit Sustain Transmit Pan Transmit Volume/Expression	bit6: off, on PB bit5: off, on AT bit4: off, on Assignable Function 2 bit3: off, on Assignable Function 1 bit2: off, on Sustain bit1: off, on Pan bit0: off, on Volume/Expression	Ctrl#7, 11
		0D	1	00 – 7F	Transmit Assignable Knob Transmit Assignable Slider Transmit MW Transmit BC Transmit FC1 Transmit FS Transmit FC2	bit6: off, on Assignable Knob bit5: off, on Assignable Slider bit4: off, on MW bit3: off, on BC bit2: off, on FC1 bit1: off, on FS bit0: off, on FC2	
		0E	1	00 – 5F	Control Slider Control Number	off, 1 – 95	
		0F	1	00 – 5F	Control knob Control Number	off, 1 – 95	
		10	1	00 – 10	Category	0 – 16	Refer to "Voice Main Category List"
		11	1	00, 20 – 7E	Zone Name 1	0, 32 – 126 (ASCII)	
		12	1	00, 20 – 7E	Zone Name 2	0, 32 – 126 (ASCII)	
		13	1	00, 20 – 7E	Zone Name 3	0, 32 – 126 (ASCII)	
		14	1	00, 20 – 7E	Zone Name 4	0, 32 – 126 (ASCII)	

Address			Size	Data Range (HEX)	Parameter Name	Description	Notes
		15	1	00, 20 – 7E	Zone Name 5	0, 32 – 126 (ASCII)	
		16	1	00, 20 – 7E	Zone Name 6	0, 32 – 126 (ASCII)	
		17	1	00, 20 – 7E	Zone Name 7	0, 32 – 126 (ASCII)	
		18	1	00, 20 – 7E	Zone Name 8	0, 32 – 126 (ASCII)	
		19	1	00, 20 – 7E	Zone Name 9	0, 32 – 126 (ASCII)	
		1A	1	00, 20 – 7E	Zone Name 10	0, 32 – 126 (ASCII)	
		1B	1	00, 20 – 7E	Zone Name 11	0, 32 – 126 (ASCII)	
		1C	1	00, 20 – 7E	Zone Name 12	0, 32 – 126 (ASCII)	
		1D	1	00, 20 – 7E	Zone Name 13	0, 32 – 126 (ASCII)	
		1E	1	00, 20 – 7E	Zone Name 14	0, 32 – 126 (ASCII)	
		1F	1	00, 20 – 7E	Zone Name 15	0, 32 – 126 (ASCII)	
		20	1	00, 20 – 7E	Zone Name 16	0, 32 – 126 (ASCII)	
		21	1	00, 20 – 7E	Zone Name 17	0, 32 – 126 (ASCII)	
		22	1	00, 20 – 7E	Zone Name 18	0, 32 – 126 (ASCII)	
		23	1	00, 20 – 7E	Zone Name 19	0, 32 – 126 (ASCII)	
		24	1	00, 20 – 7E	Zone Name 20	0, 32 – 126 (ASCII)	

TOTAL SIZE = 37 25 (HEX)

nn = zone number 00 – 07

MIDI PARAMETER CHANGE TABLE (PERFORMANCE COMMON)

Address			Size	Data Range (HEX)	Parameter Name	Description	Notes
30	00	00	1	00, 20 – 7E	Performance Name 1	0, 32 – 126 (ASCII)	
		01	1	00, 20 – 7E	Performance Name 2	0, 32 – 126 (ASCII)	
		02	1	00, 20 – 7E	Performance Name 3	0, 32 – 126 (ASCII)	
		03	1	00, 20 – 7E	Performance Name 4	0, 32 – 126 (ASCII)	
		04	1	00, 20 – 7E	Performance Name 5	0, 32 – 126 (ASCII)	
		05	1	00, 20 – 7E	Performance Name 6	0, 32 – 126 (ASCII)	
		06	1	00, 20 – 7E	Performance Name 7	0, 32 – 126 (ASCII)	
		07	1	00, 20 – 7E	Performance Name 8	0, 32 – 126 (ASCII)	
		08	1	00, 20 – 7E	Performance Name 9	0, 32 – 126 (ASCII)	
		09	1	00, 20 – 7E	Performance Name 10	0, 32 – 126 (ASCII)	
		0A	1	00, 20 – 7E	Performance Name 11	0, 32 – 126 (ASCII)	
		0B	1	00, 20 – 7E	Performance Name 12	0, 32 – 126 (ASCII)	
		0C	1	00, 20 – 7E	Performance Name 13	0, 32 – 126 (ASCII)	
		0D	1	00, 20 – 7E	Performance Name 14	0, 32 – 126 (ASCII)	
		0E	1	00, 20 – 7E	Performance Name 15	0, 32 – 126 (ASCII)	
		0F	1	00, 20 – 7E	Performance Name 16	0, 32 – 126 (ASCII)	
		10	1	00, 20 – 7E	Performance Name 17	0, 32 – 126 (ASCII)	
		11	1	00, 20 – 7E	Performance Name 18	0, 32 – 126 (ASCII)	
		12	1	00, 20 – 7E	Performance Name 19	0, 32 – 126 (ASCII)	
		13	1	00, 20 – 7E	Performance Name 20	0, 32 – 126 (ASCII)	
		14	1		reserved		
		15	1		reserved		
		16	1		reserved		
		17	1		reserved		
		18	1	00 – 07	Performance Category (Main)	0 – 7	Refer to "Category List."
		19	1	00 – 0B	Performance Category (Sub)	0 – 11	:
		1A	1		reserved		
		1B	1		reserved		
		1C	1		reserved		
		1D	1		reserved		
		1E	1	00 – 05	Knob Function Select	0=tone1, 1=tone2, 2=ARP FX, 3=reverb, 4=chorus, 5=pan	
		1F	1	01 – 7F	Pan	L63 – C – R63	
		20	1		reserved		
		21	1	00 – 7F	AEG Attack Time	-64 – +63	
		22	1	00 – 7F	AEG Decay Time	-64 – +63	
		23	1	00 – 7F	AEG Sustain Level	-64 – +63	
		24	1	00 – 7F	AEG Release Time	-64 – +63	
		25	1	01 – 7F	FEG Attack Time	-64 – +63	
		26	1	01 – 7F	FEG Decay Time	-64 – +63	
		27	1		reserved		
		28	1	00 – 7F	FEG Release Time	-64 – +63	
		29	1	00 – 7F	FEG Depth	-64 – +63	
		2A	1	00 – 7F	Cutoff Frequency	-64 – +63	
		2B	1	00 – 7F	Resonance	-64 – +63	
		2C	1		reserved		
		2D	1		reserved		
		2E	1	00 – 7F	EQ Low Frequency	-64 – +63	
		2F	1	00 – 7F	EQ Low Gain	-64 – +63	
		30	1		reserved		
		31	1	00 – 7F	EQ Mid Frequency	-64 – +63	
		32	1	00 – 7F	EQ Mid Gain	-64 – +63	
		33	1	00 – 7F	EQ Mid Q	-64 – +63	
		34	1		reserved		
		35	1	00 – 7F	EQ High Frequency	-64 – +63	
		36	1	00 – 7F	EQ High Gain	-64 – +63	
		37	1		reserved		
		38	1	00 – 7F	Volume	0 – 127	
		39	1	00 – 7F	Portamento Time	-64 – +63	
		3A	1	00 – 01	Portamento Switch	off, on	
		3B	1	00 – 7F	Reverb Send	0 – 127	
		3C	1	00 – 7F	Chorus Send	0 – 127	
		3D	1		reserved		
		3E	1		reserved		
		3F	1	00 – 01	Assignable Function 1 Mode	momentary, latch	
		40	1	00 – 01	Assignable Function 2 Mode	momentary, latch	
		41	1	00 – 01	RB Mode	hold, reset	
		42	1		reserved		
		43	1		reserved		
		44	1		reserved		
		45	1		reserved		
		46	1		reserved		
		47	1		reserved		
		48	1		reserved		
		49	1		reserved		
		4A	1		reserved		
		4B	1		reserved		
		4C	1	01 – 02	A/D Input Insertion Connect Type	ins A→B, ins B→A	
		4D	4	00 00, 20 00 00 – 0F	Insertion Part Sw	1st bit6-0: reserved 2nd bit6: reserved 2nd bit5: off, on A/D Part 2nd bit4-0: reserved 3rd bit6-0: reserved 4th bit6-4: reserved 4th bit3: off, on Part 4 4th bit2: off, on Part 3 4th bit1: off, on Part 2 4th bit0: off, on Part 1	

TOTAL SIZE = 81 51 (HEX)

Address			Size	Data Range (HEX)	Parameter Name	Description	Notes
30	30	00	1	00 – 04	ARP SF Select	SF1 – SF5	
		01	2	00 – 02 00 – 7F	ARP Tempo MSB ARP Tempo LSB	5 – 300 1st bit 6-0 → bit13-7 2nd bit 6-0 → bit 6-0	
		03	1	00 – 01	ARP Switch	off, on	
		04	1	00 – 07	ARP Synchro Quantize Value	off, 32th, 16th_Triplet, 16th, 8th_Triplet, 8th, 4th_Triplet, 4th	
		05	2	00 – 01 00 – 7F	ARP Quantize Strength Offset MSB ARP Quantize Strength Offset LSB	-100 – +100 1st bit 6-0 → bit13-7 2nd bit 6-0 → bit 6-0	
		07	2	00 – 01 00 – 7F	ARP Gate Time Rate Offset MSB ARP Gate Time Rate Offset LSB	:	
		09	2	00 – 01 00 – 7F	ARP Velocity Rate Offset MSB ARP Velocity Rate Offset LSB	:	
		0B	2	00 – 01 00 – 7F	ARP Swing Offset MSB ARP Swing Offset LSB	-120 – +120 1st bit 6-0 → bit13-7 2nd bit 6-0 → bit 6-0	

TOTAL SIZE = 13 0D (HEX)

Address			Size	Data Range (HEX)	Parameter Name	Description	Notes
30	01	00	2	00 – 7F 00 – 7F	Reverb Type MSB Reverb Type LSB	Refer to "Effect Parameter List."	
		02	1	00 – 7F	Reverb Template Number		
		03	2	00 – 7F 00 – 7F	Reverb Parameter 1 MSB Reverb Parameter 1 LSB	:	
		05	2	00 – 7F 00 – 7F	Reverb Parameter 2 MSB Reverb Parameter 2 LSB	:	
		07	2	00 – 7F 00 – 7F	Reverb Parameter 3 MSB Reverb Parameter 3 LSB	:	
		09	2	00 – 7F 00 – 7F	Reverb Parameter 4 MSB Reverb Parameter 4 LSB	:	
		0B	2	00 – 7F 00 – 7F	Reverb Parameter 5 MSB Reverb Parameter 5 LSB	:	
		0D	2	00 – 7F 00 – 7F	Reverb Parameter 6 MSB Reverb Parameter 6 LSB	:	
		0F	2	00 – 7F 00 – 7F	Reverb Parameter 7 MSB Reverb Parameter 7 LSB	:	
		11	2	00 – 7F 00 – 7F	Reverb Parameter 8 MSB Reverb Parameter 8 LSB	:	
		13	2	00 – 7F 00 – 7F	Reverb Parameter 9 MSB Reverb Parameter 9 LSB	:	
		15	2	00 – 7F 00 – 7F	Reverb Parameter 10 MSB Reverb Parameter 10 LSB	:	
		17	2	00 – 7F 00 – 7F	Reverb Parameter 11 MSB Reverb Parameter 11 LSB	:	
		19	2	00 – 7F 00 – 7F	Reverb Parameter 12 MSB Reverb Parameter 12 LSB	:	
		1B	2	00 – 7F 00 – 7F	Reverb Parameter 13 MSB Reverb Parameter 13 LSB	:	
		1D	2	00 – 7F 00 – 7F	Reverb Parameter 14 MSB Reverb Parameter 14 LSB	:	
		1F	2	00 – 7F 00 – 7F	Reverb Parameter 15 MSB Reverb Parameter 15 LSB	:	
		21	2	00 – 7F 00 – 7F	Reverb Parameter 16 MSB Reverb Parameter 16 LSB	:	
		23	1	00 – 7F	Reverb Return	-∞dB – 0dB – +6dB (0 – 96 – 127)	
		24	1	01 – 7F	Reverb Pan	L63 – C – R63	

TOTAL SIZE = 37 25 (HEX)

Address			Size	Data Range (HEX)	Parameter Name	Description	Notes
30	02	00	2	00 – 7F 00 – 7F	Chorus Type MSB Chorus Type LSB	Refer to "Effect Parameter List."	
		02	1	00 – 7F	Chorus Template Number		
		03	2	00 – 7F 00 – 7F	Chorus Parameter 1 MSB Chorus Parameter 1 LSB	:	
		05	2	00 – 7F 00 – 7F	Chorus Parameter 2 MSB Chorus Parameter 2 LSB	:	
		07	2	00 – 7F 00 – 7F	Chorus Parameter 3 MSB Chorus Parameter 3 LSB	:	
		09	2	00 – 7F 00 – 7F	Chorus Parameter 4 MSB Chorus Parameter 4 LSB	:	
		0B	2	00 – 7F 00 – 7F	Chorus Parameter 5 MSB Chorus Parameter 5 LSB	:	
		0D	2	00 – 7F 00 – 7F	Chorus Parameter 6 MSB Chorus Parameter 6 LSB	:	

Address			Size	Data Range (HEX)	Parameter Name	Description	Notes
		0F	2	00 – 7F 00 – 7F	Chorus Parameter 7 MSB Chorus Parameter 7 LSB	:	
		11	2	00 – 7F 00 – 7F	Chorus Parameter 8 MSB Chorus Parameter 8 LSB	:	
		13	2	00 – 7F 00 – 7F	Chorus Parameter 9 MSB Chorus Parameter 9 LSB	:	
		15	2	00 – 7F 00 – 7F	Chorus Parameter 10 MSB Chorus Parameter 10 LSB	:	
		17	2	00 – 7F 00 – 7F	Chorus Parameter 11 MSB Chorus Parameter 11 LSB	:	
		19	2	00 – 7F 00 – 7F	Chorus Parameter 12 MSB Chorus Parameter 12 LSB	:	
		1B	2	00 – 7F 00 – 7F	Chorus Parameter 13 MSB Chorus Parameter 13 LSB	:	
		1D	2	00 – 7F 00 – 7F	Chorus Parameter 14 MSB Chorus Parameter 14 LSB	:	
		1F	2	00 – 7F 00 – 7F	Chorus Parameter 15 MSB Chorus Parameter 15 LSB	:	
		21	2	00 – 7F 00 – 7F	Chorus Parameter 16 MSB Chorus Parameter 16 LSB	:	
		23	1	00 – 7F	Chorus Return	-∞dB – 0dB – +6dB (0 – 96 – 127)	
		24	1	01 – 7F	Chorus Pan	L63 – C – R63	
		25	1	00 – 7F	Send Chorus To Reverb	-∞dB – 0dB (0 – 127)	

TOTAL SIZE = 38 26 (HEX)

Address			Size	Data Range (HEX)	Parameter Name	Description	Notes
30	03	00	2	00 – 7F 00 – 7F	Insertion-A Type MSB Insertion-A Type LSB	Refer to "Effect Parameter List."	for A/D Part
		02	1	00 – 7F	Insertion-A Template Number		
		03	2	00 – 7F 00 – 7F	Insertion-A Parameter 1 MSB Insertion-A Parameter 1 LSB	:	:
		05	2	00 – 7F 00 – 7F	Insertion-A Parameter 2 MSB Insertion-A Parameter 2 LSB	:	:
		07	2	00 – 7F 00 – 7F	Insertion-A Parameter 3 MSB Insertion-A Parameter 3 LSB	:	:
		09	2	00 – 7F 00 – 7F	Insertion-A Parameter 4 MSB Insertion-A Parameter 4 LSB	:	:
		0B	2	00 – 7F 00 – 7F	Insertion-A Parameter 5 MSB Insertion-A Parameter 5 LSB	:	:
		0D	2	00 – 7F 00 – 7F	Insertion-A Parameter 6 MSB Insertion-A Parameter 6 LSB	:	:
		0F	2	00 – 7F 00 – 7F	Insertion-A Parameter 7 MSB Insertion-A Parameter 7 LSB	:	:
		11	2	00 – 7F 00 – 7F	Insertion-A Parameter 8 MSB Insertion-A Parameter 8 LSB	:	:
		13	2	00 – 7F 00 – 7F	Insertion-A Parameter 9 MSB Insertion-A Parameter 9 LSB	:	:
		15	2	00 – 7F 00 – 7F	Insertion-A Parameter 10 MSB Insertion-A Parameter 10 LSB	:	:
		17	2	00 – 7F 00 – 7F	Insertion-A Parameter 11 MSB Insertion-A Parameter 11 LSB	:	:
		19	2	00 – 7F 00 – 7F	Insertion-A Parameter 12 MSB Insertion-A Parameter 12 LSB	:	:
		1B	2	00 – 7F 00 – 7F	Insertion-A Parameter 13 MSB Insertion-A Parameter 13 LSB	:	:
		1D	2	00 – 7F 00 – 7F	Insertion-A Parameter 14 MSB Insertion-A Parameter 14 LSB	:	:
		1F	2	00 – 7F 00 – 7F	Insertion-A Parameter 15 MSB Insertion-A Parameter 15 LSB	:	:
		21	2	00 – 7F 00 – 7F	Insertion-A Parameter 16 MSB Insertion-A Parameter 16 LSB	:	:

TOTAL SIZE = 35 23 (HEX)

Address			Size	Data Range (HEX)	Parameter Name	Description	Notes
30	04	00	2	00 – 7F 00 – 7F	Insertion-B Type MSB Insertion-B Type LSB	Refer to "Effect Parameter List."	for A/D Part
		02	1	00 – 7F	Insertion-B Template Number		
		03	2	00 – 7F 00 – 7F	Insertion-B Parameter 1 MSB Insertion-B Parameter 1 LSB	:	:
		05	2	00 – 7F 00 – 7F	Insertion-B Parameter 2 MSB Insertion-B Parameter 2 LSB	:	:
		07	2	00 – 7F 00 – 7F	Insertion-B Parameter 3 MSB Insertion-B Parameter 3 LSB	:	:
		09	2	00 – 7F 00 – 7F	Insertion-B Parameter 4 MSB Insertion-B Parameter 4 LSB	:	:
		0B	2	00 – 7F 00 – 7F	Insertion-B Parameter 5 MSB Insertion-B Parameter 5 LSB	:	:
		0D	2	00 – 7F 00 – 7F	Insertion-B Parameter 6 MSB Insertion-B Parameter 6 LSB	:	:
		0F	2	00 – 7F 00 – 7F	Insertion-B Parameter 7 MSB Insertion-B Parameter 7 LSB	:	:
		11	2	00 – 7F 00 – 7F	Insertion-B Parameter 8 MSB Insertion-B Parameter 8 LSB	:	:
		13	2	00 – 7F 00 – 7F	Insertion-B Parameter 9 MSB Insertion-B Parameter 9 LSB	:	:
		15	2	00 – 7F 00 – 7F	Insertion-B Parameter 10 MSB Insertion-B Parameter 10 LSB	:	:
		17	2	00 – 7F 00 – 7F	Insertion-B Parameter 11 MSB Insertion-B Parameter 11 LSB	:	:
		19	2	00 – 7F 00 – 7F	Insertion-B Parameter 12 MSB Insertion-B Parameter 12 LSB	:	:
		1B	2	00 – 7F 00 – 7F	Insertion-B Parameter 13 MSB Insertion-B Parameter 13 LSB	:	:
		1D	2	00 – 7F 00 – 7F	Insertion-B Parameter 14 MSB Insertion-B Parameter 14 LSB	:	:
		1F	2	00 – 7F 00 – 7F	Insertion-B Parameter 15 MSB Insertion-B Parameter 15 LSB	:	:
		21	2	00 – 7F 00 – 7F	Insertion-B Parameter 16 MSB Insertion-B Parameter 16 LSB	:	:

TOTAL SIZE = 35 23 (HEX)

Address			Size	Data Range (HEX)	Parameter Name	Description	Notes
30	10	00	1	34 – 4C	EQ Gain 1	-12 – +12 [dB]	
		01	1	04 – 28	EQ Frequency 1	32 – 2000 [Hz]	
		02	1	01 – 78	EQ Q1	0.1 – 12.0	
		03	1	00 – 01	EQ Shape 1	shelv, peak	
		04	1	34 – 4C	EQ Gain 2	-12 – +12 [dB]	
		05	1	0E – 36	EQ Frequency 2	100 – 10.0 [kHz]	
		06	1	01 – 78	EQ Q2	0.1 – 12.0	
		07	1		reserved		
		08	1	34 – 4C	EQ Gain 3	-12 – +12 [dB]	
		09	1	0E – 36	EQ Frequency 3	100 – 10.0 [kHz]	
		0A	1	01 – 78	EQ Q3	0.1 – 12.0	
		0B	1		reserved		
		0C	1	34 – 4C	EQ Gain 4	-12 – +12 [dB]	
		0D	1	0E – 36	EQ Frequency 4	100 – 10.0 [kHz]	
		0E	1	01 – 78	EQ Q4	0.1 – 12.0	
		0F	1		reserved		
		10	1	34 – 4C	EQ Gain 5	-12 – +12 [dB]	
		11	1	1C – 3A	EQ Frequency 5	0.5 – 16.0 [kHz]	
		12	1	01 – 78	EQ Q5	0.1 – 12.0	
		13	1	00 – 01	EQ Shape 5	shelv, peak	

TOTAL SIZE = 20 14 (HEX)

Address			Size	Data Range (HEX)	Parameter Name	Description	Notes
30	11	00	2	00 – 7F 00 – 7F	Master Effect Type MSB Master Effect Type LSB	Refer to "Effect Parameter List."	
		02	1	00 – 7F	Master Effect Template Number		
		03	2	00 – 7F 00 – 7F	Master Effect Parameter 1 MSB Master Effect Parameter 1 LSB	:	
		05	2	00 – 7F 00 – 7F	Master Effect Parameter 2 MSB Master Effect Parameter 2 LSB	:	
		07	2	00 – 7F 00 – 7F	Master Effect Parameter 3 MSB Master Effect Parameter 3 LSB	:	
		09	2	00 – 7F 00 – 7F	Master Effect Parameter 4 MSB Master Effect Parameter 4 LSB	:	
		0B	2	00 – 7F 00 – 7F	Master Effect Parameter 5 MSB Master Effect Parameter 5 LSB	:	
		0D	2	00 – 7F 00 – 7F	Master Effect Parameter 6 MSB Master Effect Parameter 6 LSB	:	
		0F	2	00 – 7F 00 – 7F	Master Effect Parameter 7 MSB Master Effect Parameter 7 LSB	:	
		11	2	00 – 7F 00 – 7F	Master Effect Parameter 8 MSB Master Effect Parameter 8 LSB	:	
		13	2	00 – 7F 00 – 7F	Master Effect Parameter 9 MSB Master Effect Parameter 9 LSB	:	
		15	2	00 – 7F 00 – 7F	Master Effect Parameter 10 MSB Master Effect Parameter 10 LSB	:	
		17	2	00 – 7F 00 – 7F	Master Effect Parameter 11 MSB Master Effect Parameter 11 LSB	:	
		19	2	00 – 7F 00 – 7F	Master Effect Parameter 12 MSB Master Effect Parameter 12 LSB	:	
		1B	2	00 – 7F 00 – 7F	Master Effect Parameter 13 MSB Master Effect Parameter 13 LSB	:	
		1D	2	00 – 7F 00 – 7F	Master Effect Parameter 14 MSB Master Effect Parameter 14 LSB	:	
		1F	2	00 – 7F 00 – 7F	Master Effect Parameter 15 MSB Master Effect Parameter 15 LSB	:	
		21	2	00 – 7F 00 – 7F	Master Effect Parameter 16 MSB Master Effect Parameter 16 LSB	:	
		23	1	00 – 01	Master Effect ON/OFF	off, on	

TOTAL SIZE = 36 24 (HEX)

MIDI PARAMETER CHANGE TABLE (PERFORMANCE PART)

Address			Size	Data Range (HEX)	Parameter Name	Description	Notes
31	pp	00	1	00 – 7F	Part Switch	off, on	
		01	1	00 – 7F	Bank Select MSB	0 – 127	
		02	1	00 – 7F	Bank Select LSB	0 – 127	
		03	1	00 – 7F	Program Number	1 – 128	
		04	1		reserved		
		05	1	00 – 01	Part Mode	mono, poly	
		06	1	01 – 7F	Velocity Limit Low	1 – 127	
		07	1	01 – 7F	Velocity Limit High	1 – 127	
		08	1	00 – 7F	Note Limit Low	C-2 – G8	
		09	1	00 – 7F	Note Limit High	C-2 – G8	
		0A	1	10 – 58	Pitch Bend Range Upper	-48 – +24	
		0B	1	10 – 58	Pitch Bend Range Lower	-48 – +24	
		0C	1	00 – 7F	Velocity Sense Depth	0 – 127	
		0D	1	00 – 7F	Velocity Sense Offset	0 – 127	
		0E	1	00 – 7F	Volume	0 – 127	
		0F	1	01 – 7F	Pan	L63 – C – R63	
		10	1		reserved		
		11	2	00 – 0F 00 – 0F	Detune MSB Detune LSB	-12.8 – +12.7 [Hz] 1st bit 3-0 → bit 7-4 2nd bit 3-0 → bit 3-0	
		13	1	00 – 7F	Reverb Send	0 – 127	
		14	1	00 – 7F	Chorus Send	0 – 127	
		15	1		reserved		
		16	1	00 – 7F	Dry Level	0 – 127	
		17	1	28 – 58	Note Shift	-24 – +24 [semitones]	
		18	1		reserved		
		19	1	00 – 01	Param. with Voice	off, on	
		1A	1	00 – 01	Voice with ARP	off, on	
		1B	1	00 – 01	Portamento Switch	off, on	
		1C	1	00 – 7F	Portamento Time	0 – 127	
		1D	1	00 – 01	Portamento Mode	fingered, fulltime	
		1E	1		reserved		
		1F	1	00 – 7F	Output Select	0: L&R, 8: asnL&R 9-15: FW1&2 ... FW13&14 64-79: asnL, asnR, FW1 … FW14 127: drum (or L&R)	The setting of "drum" is available only when a Drum Voice is selected.
		20	1	18 – 7C	Receive PB Receive AT reserved reserved Receive Control Change	bit6: off, on PB bit5: off, on AT bit4: reserved bit3: reserved bit2: off, on Control Change bit1-0: reserved	
		21	1	02 – 6F	Receive FC2 Receive FC1 Receive MW Receive Sustain/Sostenuto reserved Receive Volume/Expression	bit6: off, on FC2 bit5: off, on FC1 bit4: reserved bit3: off, on MW bit2: off, on Sustain/ Sostenuto bit1: reserved bit0: off, on Volume/ Expression	
		22	1	00 – 7F	Receive Assignable Function 2 Receive Assignable Function 1 Receive Assignable Knob 2 Receive Assignable Knob 1 Receive RB Receive BC Receive FS	bit6: off, on AF2 bit5: off, on AF1 bit4: off, on AS2 bit3: off, on AS1 bit2: off, on RB bit1: off, on BC bit0: off, on FS	
		23	1	00 – 01	Voice Pan on/off	off, on	
		24	1	00 – 7F	AEG Attack Time	-64 – +63	
		25	1	00 – 7F	AEG Decay Time	-64 – +63	
		26	1	00 – 7F	AEG Sustain Level	-64 – +63	
		27	1	00 – 7F	AEG Release Time	-64 – +63	
		28	1	00 – 7F	FEG Attack Time	-64 – +63	
		29	1	00 – 7F	FEG Decay Time	-64 – +63	
		2A	1	00 – 7F	FEG Sustain Level	-64 – +63	
		2B	1	00 – 7F	FEG Release Time	-64 – +63	
		2C	1	00 – 7F	FEG Depth	-64 – +63	
		2D	1		reserved		
		2E	1	00 – 7F	Filter Cutoff Frequency	-64 – +63	
		2F	1	00 – 7F	Filter Resonance/Width	-64 – +63	
		30	1		reserved		
		31	2	00 – 01 00 – 7F	Low Frequency MSB Low Frequency LSB	50.1 – 2.00k 1st bit6-0 → bit13-7 2nd bit6-0 → bit6-0	
		33	1	20 – 60	Low Gain	-32 – +32 (-12.00dB – +12.00dB)	
		34	1		reserved		
		35	2	00 – 01 00 – 7F	Mid Frequency MSB Mid Frequency LSB	139.7 – 10.1k 1st bit6-0 → bit13-7 2nd bit6-0 → bit6-0	
		37	1	20 – 60	Mid Gain	-32 – +32 (-12.00dB – +12.00dB)	
		38	1	00 – 1F	Mid Q	0 – 31 (0.7 – 10.3)	
		39	2	01 03 – 7F	High Frequency MSB High Frequency LSB	503.8 – 14k 1st bit6-0 → bit13-7 2nd bit6-0 → bit6-0	
		3B	1	20 – 60	High Gain	-32 – +32	
		3C	1		reserved		
		3D	1	01 – 7F	Assignable Knob 1 Value	-64 – +63	
		3E	1	01 – 7F	Assignable Knob 2 Value	-64 – +63	

TOTAL SIZE = 63 3F (HEX)

pp = part number
00 – 03 Part 1 – 4 (Normal, Drum)

Address			Size	Data Range (HEX)	Parameter Name	Description	Notes
34	pp	00	1	00 – 01	ARP Switch	off, on	
		01	1	00 – 01	ARP MIDI Out Switch	off, on	
		02	1	00 – 10	ARP MIDI Out Channel	1 – 16, kbd-ch	
		03	1	00 – 01	ARP Play Only	off, on	
		04	1	00 – 01	ARP Fixed SD/BD	off, on	
		05	1		reserved		
		06	1	00 – 01	ARP Loop	off, on	
		07	1	00 – 02	ARP Hold	sync-off, off, on	
		08	1	00 – 06	ARP Unit Multiply	50%, 66%, 75%, 100%, 133%, 150%, 200%	
		09	1	00 – 7F	ARP Note Limit Low	C-2 – G8	
		0A	1	00 – 7F	ARP Note Limit High	C-2 – G8	
		0B	1	01 – 7F	ARP Velocity Limit Low	1 – 127	
		0C	1	01 – 7F	ARP Velocity Limit High	1 – 127	
		0D	1	00 – 04	ARP Key Mode	sort, thru, direct, sort+direct, thru+direct	
		0E	1	00 – 01	ARP Vel Mode	original, thru	
		0F	1	00 – 01	ARP Change Timing	realtime, measure	
		10	1	01 – 07	ARP Quantize Value	32th, 16th_Triplet, 16th, 8th_Triplet, 8th, 4th_Triplet, 4th	
		11	1	00 – 64	ARP Quantize Strength	0 – 100%	
		12	2	00 – 01 00 – 7F	ARP Velocity Rate MSB ARP Velocity Rate LSB	0 – 200% 1st bit6-0 → bit13-7 2nd bit6-0 → bit6-0	
		14	2	00 – 01 00 – 7F	ARP Gate Time Rate MSB ARP Gate Time Rate LSB	0 – 200% 1st bit6-0 → bit13-7 2nd bit6-0 → bit6-0	
		16	2		reserved		
		18	2		reserved		
		1A	2	00 – 01 00 – 7F	ARP Swing MSB ARP Swing LSB	-120 – 0 – +120 1st bit6-0 → bit13-7 2nd bit6-0 → bit6-0	
		1C	1	00 – 7F	ARP Accent Velocity Threshold	off, 1 – 127	
		1D	1	00 – 01	ARP Accent Start Quantize	off, on	
		1E	1	3D – 43	ARP Octave Range	-3 – 0 – +3	
		1F	1	36 – 4A	ARP Output Octave Shift	-10 – 0 – +10	
		20	1	00 – 01	ARP Trigger Mode	Gate, Toggle	
		21	1	00 – 01	ARP Random SFX	off, on	
		22	1	00 – 01	ARP Random SFX Key On Control	off, on	
		23	1	00 – 7F	ARP Random SFX Velocity Offset	-64 – 0 – +63	
		24	2	00 – 01 00 – 7F	ARP Assign Velocity Rate Offset SF1 MSB ARP Assign Velocity Rate Offset SF1 LSB	-100 – 0 – +100 1st bit6-0 → bit13-7 2nd bit6-0 → bit6-0	
		26	2	00 – 01 00 – 7F	ARP Assign Gate Time Offset SF1 MSB ARP Assign Gate Time Offset SF1 LSB	:	
		28	2	00 – 01 00 – 7F	ARP Assign Velocity Rate Offset SF2 MSB ARP Assign Velocity Rate Offset SF2 LSB	:	
		2A	2	00 – 01 00 – 7F	ARP Assign Gate Time Offset SF2 MSB ARP Assign Gate Time Offset SF2 LSB	:	
		2C	2	00 – 01 00 – 7F	ARP Assign Velocity Rate Offset SF3 MSB ARP Assign Velocity Rate Offset SF3 LSB	:	
		2E	2	00 – 01 00 – 7F	ARP Assign Gate Time Offset SF3 MSB ARP Assign Gate Time Offset SF3 LSB	:	
		30	2	00 – 01 00 – 7F	ARP Assign Velocity Rate Offset SF4 MSB ARP Assign Velocity Rate Offset SF4 LSB	:	
		32	2	00 – 01 00 – 7F	ARP Assign Gate Time Offset SF4 MSB ARP Assign Gate Time Offset SF4 LSB	:	
		34	2	00 – 01 00 – 7F	ARP Assign Velocity Rate Offset SF5 MSB ARP Assign Velocity Rate Offset SF5 LSB	:	
		36	2	00 – 01 00 – 7F	ARP Assign Gate Time Offset SF5 MSB ARP Assign Gate Time Offset SF5 LSB	:	
		38	2	00 – 41 00 – 7F	ARP SF1 Assign Type MSB ARP SF1 Assign Type LSB	off, Preset 0001 – 7881, User 001 – 256 1st bit6-0 → bit13-7 2nd bit6-0 → bit6-0	MA_Pf Arp1
		3A	2	00 – 41 00 – 7F	ARP SF2 Assign Type MSB ARP SF2 Assign Type LSB	:	off
		3C	2	00 – 41 00 – 7F	ARP SF3 Assign Type MSB ARP SF3 Assign Type LSB	:	off
		3E	2	00 – 41 00 – 7F	ARP SF4 Assign Type MSB ARP SF4 Assign Type LSB	:	off
		40	2	00 – 41 00 – 7F	ARP SF5 Assign Type MSB ARP SF5 Assign Type LSB	:	off

TOTAL SIZE = 66 42 (HEX)

pp = part number
00 – 03 Part 1 – 4 (Normal, Drum)

Address			Size	Data Range (HEX)	Parameter Name	Description	Notes
35	pp	00	1	00 – 03	Audio Input Mode	L mono, R mono, L+R mono, stereo	
		01	1	00 – 7F	Audio Input Part Volume	0 – 127	
		02	1	01 – 7F	Audio Input Part Pan	L63 – C – R63	
		03	1	00 – 7F	Audio Input Part Reverb Send	0 – 127	
		04	1	00 – 7F	Audio Input Part Chorus Send	0 – 127	
		05	1		reserved		
		06	1	00 – 7F	Audio Input Part Dry Level	0 – 127	
		07	1	00 – 70	Audio Input Part Output Select	0: L&R, 8: asnL&R, 9-15: FW1&2 ... FW13&14, 64-79: asnL, asnR, FW1 ... FW14, 112: insL	The FW input Part Output Select cannot be set to "112: insL".

TOTAL = 8 08 (HEX)
40 – 41 Audio In Part (A/D, FW)

MIDI PARAMETER CHANGE TABLE (MULTI COMMON for Pattern, Song)

Address			Size	Data Range (HEX)	Parameter Name	Description	Notes
36	00	00	1		reserved		
		01	1		reserved		
		02	1		reserved		
		03	1		reserved		
		04	1		reserved		
		05	1		reserved		
		06	1		reserved		
		07	1		reserved		
		08	1		reserved		
		09	1		reserved		
		0A	1		reserved		
		0B	1		reserved		
		0C	1		reserved		
		0D	1		reserved		
		0E	1		reserved		
		0F	1		reserved		
		10	1		reserved		
		11	1		reserved		
		12	1		reserved		
		13	1		reserved		
		14	1		reserved		
		15	1		reserved		
		16	1		reserved		
		17	1		reserved		
		18	1		reserved		
		19	1		reserved		
		1A	1		reserved		
		1B	1		reserved		
		1C	1		reserved		
		1D	1		reserved		
		1E	1	00 – 05	Knob Function Select	0=tone1, 1=tone2, 2=ARP FX, 3=reverb, 4=chorus, 5=pan	
		1F	1		reserved		
		20	1		reserved		
		21	1		reserved		
		22	1		reserved		
		23	1		reserved		
		24	1		reserved		
		25	1		reserved		
		26	1		reserved		
		27	1		reserved		
		28	1		reserved		
		29	1		reserved		
		2A	1		reserved		
		2B	1		reserved		
		2C	1		reserved		
		2D	2		reserved		
		2F	1		reserved		
		30	2		reserved		
		32	1		reserved		
		33	1		reserved		
		34	2		reserved		
		36	1		reserved		
		37	1		reserved		
		38	1		reserved		
		39	1		reserved		
		3A	1		reserved		
		3B	1		reserved		
		3C	1		reserved		
		3D	1		reserved		
		3E	1		reserved		
		3F	1	00 – 01	Assignable Function 1 Mode	momentary, latch	
		40	1	00 – 01	Assignable Function 2 Mode	momentary, latch	
		41	1	00 – 01	RB Mode	hold, reset	
		42	1		reserved		
		43	1		reserved		
		44	1		reserved		
		45	1		reserved		
		46	1		reserved		
		47	1		reserved		
		48	1		reserved		
		49	1		reserved		
		4A	1		reserved		
		4B	1		reserved		
		4C	1	01 – 02	A/D Input Insertion Connect Type	ins A→B, ins B→A	

Address			Size	Data Range (HEX)	Parameter Name	Description	Notes
		4D	4	00 00 – 23 00 – 7F 00 – 7F	Insertion Part Sw	1st bit6-0: reserved 2nd bit6: reserved 2nd bit5: off, on A/D Part 2nd bit4: reserved 2nd bit3: reserved 2nd bit2: reserved 2nd bit1: off, on Part 16 2nd bit0: off, on Part 15 3rd bit6: off, on Part 14 3rd bit5: off, on Part 13 3rd bit4: off, on Part 12 3rd bit3: off, on Part 11 3rd bit2: off, on Part 10 3rd bit1: off, on Part 9 3rd bit0: off, on Part 8 4th bit6: off, on Part 7 4th bit5: off, on Part 6 4th bit4: off, on Part 5 4th bit3: off, on Part 4 4th bit2: off, on Part 3 4th bit1: off, on Part 2 4th bit0: off, on Part 1	Up to eight parts can be turned on simultaneously.

TOTAL SIZE = 81 51 (HEX)

Address			Size	Data Range (HEX)	Parameter Name	Description	Notes
36	30	00	1	00 – 04	ARP SF Select	SF1 – SF5	
		01	2		reserved		
		03	1	00 – 01	ARP Switch	off, on	
		04	1	00 – 07	ARP Synchro Quantize Value	off, 32th,16th_Triplet, 16th, 8th_Triplet, 8th, 4th_Triplet, 4th	
		05	2	00 – 01 00 – 7F	ARP Quantize Strength Offset MSB ARP Quantize Strength Offset LSB	-100 – +100 1st bit6-0 → bit13-7 2nd bit6-0 → bit6-0	
		07	2	00 – 01 00 – 7F	ARP Gate Time Rate Offset MSB ARP Gate Time Rate Offset LSB	:	
		09	2	00 – 01 00 – 7F	ARP Velocity Rate Offset MSB ARP Velocity Rate Offset LSB	:	
		0B	2	00 – 01 00 – 7F	ARP Swing Offset MSB ARP Swing Offset LSB	-120 – +120 1st bit6-0 → bit13-7 2nd bit6-0 → bit6-0	

TOTAL SIZE = 13 0D (HEX)

Address			Size	Data Range (HEX)	Parameter Name	Description	Notes
36	01	00	2	00 – 7F 00 – 7F	Reverb Type MSB Reverb Type LSB	Refer to "Effect Parameter List."	
		02	1	00 – 7F	Reverb Template Number		
		03	2	00 – 7F 00 – 7F	Reverb Parameter 1 MSB Reverb Parameter 1 LSB	:	
		05	2	00 – 7F 00 – 7F	Reverb Parameter 2 MSB Reverb Parameter 2 LSB	:	
		07	2	00 – 7F 00 – 7F	Reverb Parameter 3 MSB Reverb Parameter 3 LSB	:	
		09	2	00 – 7F 00 – 7F	Reverb Parameter 4 MSB Reverb Parameter 4 LSB	:	
		0B	2	00 – 7F 00 – 7F	Reverb Parameter 5 MSB Reverb Parameter 5 LSB	:	
		0D	2	00 – 7F 00 – 7F	Reverb Parameter 6 MSB Reverb Parameter 6 LSB	:	
		0F	2	00 – 7F 00 – 7F	Reverb Parameter 7 MSB Reverb Parameter 7 LSB	:	
		11	2	00 – 7F 00 – 7F	Reverb Parameter 8 MSB Reverb Parameter 8 LSB	:	
		13	2	00 – 7F 00 – 7F	Reverb Parameter 9 MSB Reverb Parameter 9 LSB	:	
		15	2	00 – 7F 00 – 7F	Reverb Parameter 10 MSB Reverb Parameter 10 LSB	:	
		17	2	00 – 7F 00 – 7F	Reverb Parameter 11 MSB Reverb Parameter 11 LSB	:	
		19	2	00 – 7F 00 – 7F	Reverb Parameter 12 MSB Reverb Parameter 12 LSB	:	
		1B	2	00 – 7F 00 – 7F	Reverb Parameter 13 MSB Reverb Parameter 13 LSB	:	
		1D	2	00 – 7F 00 – 7F	Reverb Parameter 14 MSB Reverb Parameter 14 LSB	:	
		1G	2	00 – 7F 00 – 7F	Reverb Parameter 15 MSB Reverb Parameter 15 LSB	:	
		21	2	00 – 7F 00 – 7F	Reverb Parameter 16 MSB Reverb Parameter 16 LSB	:	
		23	1	00 – 7F	Reverb Return	-∞dB – 0dB – +6dB (0 – 96 – 127)	
		24	1	01 – 7F	Reverb Pan	L63 – C – R63	

TOTAL SIZE = 37 25 (HEX)

Address			Size	Data Range (HEX)	Parameter Name	Description	Notes
36	02	00	2	00 – 7F 00 – 7F	Chorus Type MSB Chorus Type LSB	Refer to "Effect Parameter List."	
		02	1	00 – 7F	Chorus Template Number		
		03	2	00 – 7F 00 – 7F	Chorus Parameter 1 MSB Chorus Parameter 1 LSB	:	
		05	2	00 – 7F 00 – 7F	Chorus Parameter 2 MSB Chorus Parameter 2 LSB	:	
		07	2	00 – 7F 00 – 7F	Chorus Parameter 3 MSB Chorus Parameter 3 LSB	:	
		09	2	00 – 7F 00 – 7F	Chorus Parameter 4 MSB Chorus Parameter 4 LSB	:	
		0B	2	00 – 7F 00 – 7F	Chorus Parameter 5 MSB Chorus Parameter 5 LSB	:	
		0D	2	00 – 7F 00 – 7F	Chorus Parameter 6 MSB Chorus Parameter 6 LSB	:	
		0F	2	00 – 7F 00 – 7F	Chorus Parameter 7 MSB Chorus Parameter 7 LSB	:	
		11	2	00 – 7F 00 – 7F	Chorus Parameter 8 MSB Chorus Parameter 8 LSB	:	
		13	2	00 – 7F 00 – 7F	Chorus Parameter 9 MSB Chorus Parameter 9 LSB	:	
		15	2	00 – 7F 00 – 7F	Chorus Parameter 10 MSB Chorus Parameter 10 LSB	:	
		17	2	00 – 7F 00 – 7F	Chorus Parameter 11 MSB Chorus Parameter 11 LSB	:	
		19	2	00 – 7F 00 – 7F	Chorus Parameter 12 MSB Chorus Parameter 12 LSB	:	
		1B	2	00 – 7F 00 – 7F	Chorus Parameter 13 MSB Chorus Parameter 13 LSB	:	
		1D	2	00 – 7F 00 – 7F	Chorus Parameter 14 MSB Chorus Parameter 14 LSB	:	
		1G	2	00 – 7F 00 – 7F	Chorus Parameter 15 MSB Chorus Parameter 15 LSB	:	
		21	2	00 – 7F 00 – 7F	Chorus Parameter 16 MSB Chorus Parameter 16 LSB	:	
		23	1	00 – 7F	Chorus Return	-∞dB – 0dB – +6dB (0 – 96 – 127)	
		24	1	01 – 7F	Chorus Pan	L63 – C – R63	
		25	1	00 – 7F	Send Chorus To Reverb	-∞dB – 0dB (0 – 127)	

TOTAL SIZE = 38 26 (HEX)

Address			Size	Data Range (HEX)	Parameter Name	Description	Notes
36	03	00	2	00 – 7F 00 – 7F	Insertion-A Type MSB Insertion-A Type LSB	Refer to "Effect Parameter List."	for A/D Part
		02	1	00 – 7F	Insertion-A Template Number		
		03	2	00 – 7F 00 – 7F	Insertion-A Parameter 1 MSB Insertion-A Parameter 1 LSB	:	:
		05	2	00 – 7F 00 – 7F	Insertion-A Parameter 2 MSB Insertion-A Parameter 2 LSB	:	:
		07	2	00 – 7F 00 – 7F	Insertion-A Parameter 3 MSB Insertion-A Parameter 3 LSB	:	:
		09	2	00 – 7F 00 – 7F	Insertion-A Parameter 4 MSB Insertion-A Parameter 4 LSB	:	:
		0B	2	00 – 7F 00 – 7F	Insertion-A Parameter 5 MSB Insertion-A Parameter 5 LSB	:	:
		0D	2	00 – 7F 00 – 7F	Insertion-A Parameter 6 MSB Insertion-A Parameter 6 LSB	:	:
		0F	2	00 – 7F 00 – 7F	Insertion-A Parameter 7 MSB Insertion-A Parameter 7 LSB	:	:
		11	2	00 – 7F 00 – 7F	Insertion-A Parameter 8 MSB Insertion-A Parameter 8 LSB	:	:
		13	2	00 – 7F 00 – 7F	Insertion-A Parameter 9 MSB Insertion-A Parameter 9 LSB	:	:
		15	2	00 – 7F 00 – 7F	Insertion-A Parameter 10 MSB Insertion-A Parameter 10 LSB	:	:
		17	2	00 – 7F 00 – 7F	Insertion-A Parameter 11 MSB Insertion-A Parameter 11 LSB	:	:
		19	2	00 – 7F 00 – 7F	Insertion-A Parameter 12 MSB Insertion-A Parameter 12 LSB	:	:
		1B	2	00 – 7F 00 – 7F	Insertion-A Parameter 13 MSB Insertion-A Parameter 13 LSB	:	:
		1D	2	00 – 7F 00 – 7F	Insertion-A Parameter 14 MSB Insertion-A Parameter 14 LSB	:	:
		1F	2	00 – 7F 00 – 7F	Insertion-A Parameter 15 MSB Insertion-A Parameter 15 LSB	:	:
		21	2	00 – 7F 00 – 7F	Insertion-A Parameter 16 MSB Insertion-A Parameter 16 LSB	:	:

TOTAL SIZE = 35 23 (HEX)

Address			Size	Data Range (HEX)	Parameter Name	Description	Notes
46	04	00	2	00 – 7F 00 – 7F	Insertion-B Type MSB Insertion-B Type LSB	Refer to "Effect Parameter List."	for A/D Part
		02	1	00 – 7F	Insertion-B Template Number		
		03	2	00 – 7F 00 – 7F	Insertion-B Parameter 1 MSB Insertion-B Parameter 1 LSB	:	:
		05	2	00 – 7F 00 – 7F	Insertion-B Parameter 2 MSB Insertion-B Parameter 2 LSB	:	:
		07	2	00 – 7F 00 – 7F	Insertion-B Parameter 3 MSB Insertion-B Parameter 3 LSB	:	:
		09	2	00 – 7F 00 – 7F	Insertion-B Parameter 4 MSB Insertion-B Parameter 4 LSB	:	:
		0B	2	00 – 7F 00 – 7F	Insertion-B Parameter 5 MSB Insertion-B Parameter 5 LSB	:	:
		0D	2	00 – 7F 00 – 7F	Insertion-B Parameter 6 MSB Insertion-B Parameter 6 LSB	:	:
		0F	2	00 – 7F 00 – 7F	Insertion-B Parameter 7 MSB Insertion-B Parameter 7 LSB	:	:

Address			Size	Data Range (HEX)	Parameter Name	Description	Notes
		11	2	00 – 7F 00 – 7F	Insertion-B Parameter 8 MSB Insertion-B Parameter 8 LSB	:	:
		13	2	00 – 7F 00 – 7F	Insertion-B Parameter 9 MSB Insertion-B Parameter 9 LSB	:	:
		15	2	00 – 7F 00 – 7F	Insertion-B Parameter 10 MSB Insertion-B Parameter 10 LSB	:	:
		17	2	00 – 7F 00 – 7F	Insertion-B Parameter 11 MSB Insertion-B Parameter 11 LSB	:	:
		19	2	00 – 7F 00 – 7F	Insertion-B Parameter 12 MSB Insertion-B Parameter 12 LSB	:	:
		1B	2	00 – 7F 00 – 7F	Insertion-B Parameter 13 MSB Insertion-B Parameter 13 LSB	:	:
		1D	2	00 – 7F 00 – 7F	Insertion-B Parameter 14 MSB Insertion-B Parameter 14 LSB	:	:
		1F	2	00 – 7F 00 – 7F	Insertion-B Parameter 15 MSB Insertion-B Parameter 15 LSB	:	:
		21	2	00 – 7F 00 – 7F	Insertion-B Parameter 16 MSB Insertion-B Parameter 16 LSB	:	:

TOTAL SIZE = 35 23 (HEX)

Address			Size	Data Range (HEX)	Parameter Name	Description	Notes
36	10	00	1	34 – 4C	EQ Gain 1	-12 – +12 [dB]	
		01	1	04 – 28	EQ Frequency 1	32 – 2000 [Hz]	
		02	1	01 – 78	EQ Q1	0.1 – 12.0	
		03	1	00 – 01	EQ Shape 1	shelv, peak	
		04	1	34 – 4C	EQ Gain 2	-12 – +12 [dB]	
		05	1	0E – 36	EQ Frequency 2	100 – 10.0 [kHz]	
		06	1	01 – 78	EQ Q2	0.1 – 12.0	
		07	1		reserved		
		08	1	34 – 4C	EQ Gain 3	-12 – +12 [dB]	
		09	1	0E – 36	EQ Frequency 3	100 – 10.0 [kHz]	
		0A	1	01 – 78	EQ Q3	0. 1- 12.0	
		0B	1		reserved		
		0C	1	34 – 4C	EQ Gain 4	-12 – +12 [dB]	
		0D	1	0E – 36	EQ Frequency 4	100 – 10.0 [kHz]	
		0E	1	01 – 78	EQ Q4	0.1 – 12.0	
		0F	1		reserved		
		10	1	34 – 4C	EQ Gain 5	-12 – +12 [dB]	
		11	1	1C – 3A	EQ Frequency 5	0.5 – 16.0 [kHz]	
		12	1	01 – 78	EQ Q5	0.1 – 12.0	
		13	1	00 – 01	EQ Shape 5	shelv, peak	

TOTAL SIZE = 20 14 (HEX)

Address			Size	Data Range (HEX)	Parameter Name	Description	Notes
36	11	00	2	00 – 7F 00 – 7F	Master Effect Type MSB Master Effect Type LSB	Refer to "Effect Parameter List."	
		02	1	00 – 7F	Master Effect Template Number		
		03	2	00 – 7F 00 – 7F	Master Effect Parameter 1 MSB Master Effect Parameter 1 LSB	:	
		05	2	00 – 7F 00 – 7F	Master Effect Parameter 2 MSB Master Effect Parameter 2 LSB	:	
		07	2	00 – 7F 00 – 7F	Master Effect Parameter 3 MSB Master Effect Parameter 3 LSB	:	
		09	2	00 – 7F 00 – 7F	Master Effect Parameter 4 MSB Master Effect Parameter 4 LSB	:	
		0B	2	00 – 7F 00 – 7F	Master Effect Parameter 5 MSB Master Effect Parameter 5 LSB	:	
		0D	2	00 – 7F 00 – 7F	Master Effect Parameter 6 MSB Master Effect Parameter 6 LSB	:	
		0F	2	00 – 7F 00 – 7F	Master Effect Parameter 7 MSB Master Effect Parameter 7 LSB	:	
		11	2	00 – 7F 00 – 7F	Master Effect Parameter 8 MSB Master Effect Parameter 8 LSB	:	
		13	2	00 – 7F 00 – 7F	Master Effect Parameter 9 MSB Master Effect Parameter 9 LSB	:	
		15	2	00 – 7F 00 – 7F	Master Effect Parameter 10 MSB Master Effect Parameter 10 LSB	:	
		17	2	00 – 7F 00 – 7F	Master Effect Parameter 11 MSB Master Effect Parameter 11 LSB	:	
		19	2	00 – 7F 00 – 7F	Master Effect Parameter 12 MSB Master Effect Parameter 12 LSB	:	
		1B	2	00 – 7F 00 – 7F	Master Effect Parameter 13 MSB Master Effect Parameter 13 LSB	:	
		1D	2	00 – 7F 00 – 7F	Master Effect Parameter 14 MSB Master Effect Parameter 14 LSB	:	
		1G	2	00 – 7F 00 – 7F	Master Effect Parameter 15 MSB Master Effect Parameter 15 LSB	:	
		21	2	00 – 7F 00 – 7F	Master Effect Parameter 16 MSB Master Effect Parameter 16 LSB	:	
		23	1	00 – 01	Master Effect ON/OFF	off, on	

TOTAL SIZE = 36 24 (HEX)

MIDI PARAMETER CHANGE TABLE (MULTI PART for Pattern, Song)

Address			Size	Data Range (HEX)	Parameter Name	Description	Notes
37	pp	00	1		reserved		
		01	1	00 – 7F	Bank Select MSB	0 – 127	
		02	1	00 – 7F	Bank Select LSB	0 – 127	
		03	1	00 – 7F	Program Number	1 – 128	
		04	1	00 – 0F, 7F	Receive Channel	1 – 16, off	
		05	1	00 – 01	Part Mode	mono, poly	
		06	1	01 – 7F	Velocity Limit Low	1 – 127	
		07	1	01 – 7F	Velocity Limit High	1 – 127	
		08	1	00 – 7F	Note Limit Low	C-2 – G8	
		09	1	00 – 7F	Note Limit High	C-2 – G8	
		0A	1	10 – 58	Pitch Bend Range Upper	-48 – +24	
		0B	1	10 – 58	Pitch Bend Range Lower	-48 – +24	
		0C	1	00 – 7F	Velocity Sense Depth	0 – 127	
		0D	1	00 – 7F	Velocity Sense Offset	0 – 127	
		0E	1	00 – 7F	Volume	0 – 127	
		0F	1	01 – 7F	Pan	L63 – C – R63	
		10	1		reserved		
		11	2	00 – 0F 00 – 0F	Detune MSB Detune LSB	-12.8 – +12.7 [Hz] 1st bit 3-0 → bit 7-4 2nd bit 3-0 → bit 3-0	
		13	1	00 – 7F	Reverb Send	0 – 127	
		14	1	00 – 7F	Chorus Send	0 – 127	
		15	1	00 – 7F	reserved		
		16	1	00 – 7F	Dry Level	0 – 127	
		17	1	28 – 58	Note Shift	-24 – +24 [semitones]	
		18	1		reserved		
		19	1	00 – 01	Param. with Voice	off, on	
		1A	1	00 – 01	Voice with ARP	off, on	
		1B	1	00 – 01	Portamento Switch	off, on	
		1C	1	00 – 7F	Portamento Time	0 – 127	
		1D	1	00 – 01	Portamento Mode	fingered, fulltime	
		1E	1		reserved		
		1F	1	00 – 7F	Output Select	0: L&R, 8: asnL&R, 9-15: FW1&2 ... FW13&14, 64-79: asnL, asnR, FW1 ... FW14, 127: drum (or L&R)	The setting of "drum" is available only when a Drum Voice is selected.
		20	1	00 – 7C	Receive PB Receive AT Receive Program Change Receive Bank Select Receive Control Change	bit6: off, on PB bit5: off, on AT bit4: off, on Program Change bit3: off, on Bank Select bit2: off, on Control Change bit1-0: reserved	
		21	1	00 – 6F	Receive FC2 Receive FC1 Receive MW Receive Sustain/Sostenuto Receive Pan Receive Volume/Expression	bit6: off, on FC2 bit5: off, on FC1 bit4: reserved bit3: off, on MW bit2: off, on Sustain/Sostenuto bit1: off, on Pan bit0: off, on Volume/ Expression	
		22	1	00 – 7F	Receive Assignable Function 2 Receive Assignable Function 1 Receive Assignable Knob 2 Receive Assignable Knob 1 Receive RB Receive BC Receive FS	bit6: off, on AF2 bit5: off, on AF1 bit4: off, on AS2 bit3: off, on AS1 bit2: off, on RB bit1: off, on BC bit0: off, on FS	
		23	1	00 – 01	Voice Pan on/off	off, on	
		24	1	00 – 7F	AEG Attack Time	-64 – +63	
		25	1	00 – 7F	AEG Decay Time	-64 – +63	
		26	1	00 – 7F	AEG Sustain Level	-64 – +63	
		27	1	00 – 7F	AEG Release Time	-64 – +63	
		28	1	00 – 7F	FEG Attack Time	-64 – +63	
		29	1	00 – 7F	FEG Decay Time	-64 – +63	
		2A	1	00 – 7F	FEG Sustain Level	-64 – +63	
		2B	1	00 – 7F	FEG Release Time	-64 – +63	
		2C	1	00 – 7F	FEG Depth	-64 – +63	
		2D	1	00 – 7F	reserved		
		2E	1	00 – 7F	Filter Cutoff Frequency	-64 – +63	
		2F	1	00 – 7F	Filter Resonance/Width	-64 – +63	
		30	1		reserved		
		31	2	00 – 01 00 – 7F	Low Frequency MSB Low Frequency LSB	50.1 – 2.00k 1st bit6-0 → bit13-7 2nd bit6-0 → bit6-0	
		33	1	20 – 60	Low Gain	-32 – +32 (-12.00dB – +12.00dB)	
		34	1		reserved		
		35	2	00 – 01 00 – 7F	Mid Frequency MSB Mid Frequency LSB	139.7 – 10.1k 1st bit6-0 → bit13-7 2nd bit6-0 → bit6-0	
		37	1	20 – 60	Mid Gain	-32 – +32 (-12.00dB – +12.00dB)	
		38	1	00 – 1F	Mid Q	0 – 31 (0.7 – 10.3)	
		39	2	00 – 01 00 – 7F	High Frequency MSB High Frequency LSB	503.8 – 14k 1st bit6-0 → bit13-7 2nd bit6-0 → bit6-0	
		3B	1	20 – 60	High Gain	-32 – +32 (-12.00dB – +12.00dB)	

Address			Size	Data Range (HEX)	Parameter Name	Description	Notes
		3C	1		reserved		
		3D	1	00 – 7F	Assignable Knob 1 Value	-64 – +63	
		3E	1	00 – 7F	Assignable Knob 2 Value	-64 – +63	

TOTAL SIZE = 63 3F (HEX)

pp = part number
00 – 0F Part 1 – 16 (Normal, Drum, Sample)

Address			Size	Data Range (HEX)	Parameter Name	Description	Notes
38	pp	00	1	00 – 01	ARP Switch	off, on	
		01	1	00 – 01	ARP MIDI Out Switch	off, on	
		02	1	00 – 10	ARP MIDI Out Channel	1 – 16, kbd-ch	
		03	1	00 – 01	ARP Play Only	off, on	
		04	1	00 – 01	ARP Fixed SD/BD	off, on	
		05	1		reserved		
		06	1	00 – 01	ARP Loop	off, on	
		07	1	00 – 02	ARP Hold	sync-off, off, on	
		08	1	00 – 06	ARP Unit Multiply	50%, 66%, 75%, 100%, 133%, 150%, 200%	
		09	1	00 – 7F	ARP Note Limit Low	C-2 – G8	
		0A	1	00 – 7F	ARP Note Limit High	C-2 – G8	
		0B	1	01 – 7F	ARP Velocity Limit Low	1 – 127	
		0C	1	01 – 7F	ARP Velocity Limit High	1 – 127	
		0D	1	00 – 04	ARP Key Mode	sort, thru, direct, sort +direct, thru+direct	
		0E	1	00 – 01	ARP Vel Mode	original, thru	
		0F	1	00 – 01	ARP Change Timing	realtime, measure	
		10	1	01 – 07	ARP Quantize Value	32th, 16th_Triplet, 16th, 8th_Triplet, 8th, 4th_Triplet, 4th	
		11	1	00 – 64	ARP Quantize Strength	0 – 100%	
		12	2	00 – 01 00 – 7F	ARP Velocity Rate MSB ARP Velocity Rate LSB	0 – 200% 1st bit6-0 → bit13-7 2nd bit6-0 → bit6-0	
		14	2	00 – 01 00 – 7F	ARP Gate Time Rate MSB ARP Gate Time Rate LSB	0 – 200% 1st bit6-0 → bit13-7 2nd bit6-0 → bit6-0	
		16	2		reserved		
		18	2		reserved		
		1A	2	00 – 01 00 – 7F	ARP Swing MSB ARP Swing LSB	-120 – 0 – +120 1st bit6-0 → bit13-7 2nd bit6-0 → bit6-0	
		1C	1	00 – 7F	ARP Accent Velocity Threshold	off, 1 – 127	
		1D	1	00 – 01	ARP Accent Start Quantize	off, on	
		1E	1	3D – 43	ARP Octave Range	-3 – 0 – +3	
		1F	1	36 – 4A	ARP Output Octave Shift	-10 – 0 – +10	
		20	1	00 – 01	ARP Trigger Mode	gate, toggle	
		21	1	00 – 01	ARP Random SFX	off, on	
		22	1	00 – 01	ARP Random SFX Key On Control	off, on	
		23	1	00 – 7F	ARP Random SFX Velocity Offset	-64 – 0 – +63	
		24	2	00 – 01 00 – 7F	ARP Assign Velocity Rate Offset SF1 MSB ARP Assign Velocity Rate Offset SF1 LSB	-100 – 0 – +100 1st bit6-0 → bit13-7 2nd bit6-0 → bit6-0	
		26	2	00 – 01 00 – 7F	ARP Assign Gate Time Offset SF1 MSB ARP Assign Gate Time Offset SF1 LSB	:	
		28	2	00 – 01 00 – 7F	ARP Assign Velocity Rate Offset SF2 MSB ARP Assign Velocity Rate Offset SF2 LSB	:	
		2A	2	00 – 01 00 – 7F	ARP Assign Gate Time Offset SF2 MSB ARP Assign Gate Time Offset SF2 LSB	:	
		2C	2	00 – 01 00 – 7F	ARP Assign Velocity Rate Offset SF3 MSB ARP Assign Velocity Rate Offset SF3 LSB	:	
		2E	2	00 – 01 00 – 7F	ARP Assign Gate Time Offset SF3 MSB ARP Assign Gate Time Offset SF3 LSB	:	
		30	2	00 – 01 00 – 7F	ARP Assign Velocity Rate Offset SF4 MSB ARP Assign Velocity Rate Offset SF4 LSB	:	
		32	2	00 – 01 00 – 7F	ARP Assign Gate Time Offset SF4 MSB ARP Assign Gate Time Offset SF4 LSB	:	
		34	2	00 – 01 00 – 7F	ARP Assign Velocity Rate Offset SF5 MSB ARP Assign Velocity Rate Offset SF5 LSB	:	
		36	2	00 – 01 00 – 7F	ARP Assign Gate Time Offset SF5 MSB ARP Assign Gate Time Offset SF5 LSB	:	
		38	2	00 – 41 00 – 7F	ARP SF1 Assign Type MSB ARP SF1 Assign Type LSB	off, Preset 0001 – 7881, User 001 – 256 1st bit6-0 → bit13-7 2nd bit6-0 → bit6-0	
		3A	2	00 – 41 00 – 7F	ARP SF2 Assign Type MSB ARP SF2 Assign Type LSB	:	
		3C	2	00 – 41 00 – 7F	ARP SF3 Assign Type MSB ARP SF3 Assign Type LSB	:	
		3E	2	00 – 41 00 – 7F	ARP SF4 Assign Type MSB ARP SF4 Assign Type LSB	:	
		40	2	00 – 41 00 – 7F	ARP SF5 Assign Type MSB ARP SF5 Assign Type LSB	:	

TOTAL SIZE = 66 42 (HEX)

pp = part number
00 – 0F Part 1 – 16 (Normal, Drum, Sample)

Address			Size	Data Range (HEX)	Parameter Name	Description	Notes
39	pp	00	1	00 – 03	Audio Input Mode	L mono, R mono, L+R mono, stereo	
		01	1	00 – 7F	Audio Input Part Volume	0 – 127	
		02	1	01 – 7F	Audio Input Part Pan	L63 – C – R63	
		03	1	00 – 7F	Audio Input Part Reverb Send	0 – 127	
		04	1	00 – 7F	Audio Input Part Chorus Send	0 – 127	
		05	1		reserved		
		06	1	00 – 7F	Audio Input Part Dry Level	0 – 127	
		07	1	00 – 70	Audio Input Part Output Select	0: L&R, 8: asnL&R, 9-15: FW1&2 ... FW13&14, 64-79: asnL, asnR, FW1 ... FW14, 112: insL	

TOTAL SIZE = 8 08 (HEX)

pp = part number
40 – 41 Audio In Part (A/D, FW)

MIDI PARAMETER CHANGE TABLE (NORMAL VOICE COMMON)

Address			Size	Data Range (HEX)	Parameter Name	Description	Notes
40	00	00	1	00, 20 – 7E	Voice Name 1	0, 32 – 126 (ASCII)	
		01	1	00, 20 – 7E	Voice Name 2	0, 32 – 126 (ASCII)	
		02	1	00, 20 – 7E	Voice Name 3	0, 32 – 126 (ASCII)	
		03	1	00, 20 – 7E	Voice Name 4	0, 32 – 126 (ASCII)	
		04	1	00, 20 – 7E	Voice Name 5	0, 32 – 126 (ASCII)	
		05	1	00, 20 – 7E	Voice Name 6	0, 32 – 126 (ASCII)	
		06	1	00, 20 – 7E	Voice Name 7	0, 32 – 126 (ASCII)	
		07	1	00, 20 – 7E	Voice Name 8	0, 32 – 126 (ASCII)	
		08	1	00, 20 – 7E	Voice Name 9	0, 32 – 126 (ASCII)	
		09	1	00, 20 – 7E	Voice Name 10	0, 32 – 126 (ASCII)	
		0A	1	00, 20 – 7E	Voice Name 11	0, 32 – 126 (ASCII)	
		0B	1	00, 20 – 7E	Voice Name 12	0, 32 – 126 (ASCII)	
		0C	1	00, 20 – 7E	Voice Name 13	0, 32 – 126 (ASCII)	
		0D	1	00, 20 – 7E	Voice Name 14	0, 32 – 126 (ASCII)	
		0E	1	00, 20 – 7E	Voice Name 15	0, 32 – 126 (ASCII)	
		0F	1	00, 20 – 7E	Voice Name 16	0, 32 – 126 (ASCII)	
		10	1	00, 20 – 7E	Voice Name 17	0, 32 – 126 (ASCII)	
		11	1	00, 20 – 7E	Voice Name 18	0, 32 – 126 (ASCII)	
		12	1	00, 20 – 7E	Voice Name 19	0, 32 – 126 (ASCII)	
		13	1	00, 20 – 7E	Voice Name 20	0, 32 – 126 (ASCII)	
		14	1		reserved		
		15	1		reserved		
		16	1		reserved		
		17	1		reserved		
		18	1	00 – 10	Voice Category 1 (Main)	0 – 16	Refer to "Category List."
		19	1	00 – 05	Voice Category 1 (Sub)	0 – 5	:
		1A	1	00 – 10	Voice Category 2 (Main)	0 – 16	:
		1B	1	00 – 05	Voice Category 2 (Sub)	0 – 5	:
		1C	1		reserved		
		1D	1		reserved		
		1E	1	00 – 02	Knob Function Select	0=tone1, 1=tone2, 2=ARP FX	
		1F	1	01 – 7F	Pan	L63 – C – R63	
		20	1	28 – 58	Note Shift	-24 – +24 [semitones]	
		21	1	00 – 7F	AEG Attack Time	-64 – +63	
		22	1	00 – 7F	AEG Decay Time	-64 – +63	
		23	1	00 – 7F	AEG Sustain Level	-64 – +63	
		24	1	00 – 7F	AEG Release Time	-64 – +63	
		25	1	00 – 7F	FEG Attack Time	-64 – +63	
		26	1	00 – 7F	FEG Decay Time	-64 – +63	
		27	1		reserved		
		28	1	00 – 7F	FEG Release Time	-64 – +63	
		29	1	00 – 7F	FEG Depth	-64 – +63	
		2A	1	00 – 7F	Cutoff Frequency	-64 – +63	
		2B	1	00 – 7F	Resonance	-64 – +63	
		2C	1		reserved		
		2D	2	00 – 01 00 – 7F	EQ Low Frequency MSB EQ Low Frequency LSB	50.1 – 2.00k 1st bit6-0 → bit13-7 2nd bit6-0 → bit6-0	
		2F	1	20 – 60	EQ Low Gain	-32 – +32 (-12.00dB – +12.00dB)	
		30	1		reserved		
		31	2	00 – 01 00 – 7F	EQ Mid Frequency MSB EQ Mid Frequency LSB	139.7 – 10.1k 1st bit6-0 → bit13-7 2nd bit6-0 → bit6-0	
		33	1	20 – 60	EQ Mid Gain	-32 – +32 (-12.00dB – +12.00dB)	
		34	1	00 – 1F	EQ Mid Q	0 – 31 (0.7 – 10.3)	
		35	2	01 03 – 7F	EQ High Frequency MSB EQ High Frequency LSB	503.8 – 14.0k 1st bit6-0 → bit13-7 2nd bit6-0 → bit6-0	
		37	1	20 – 60	EQ High Gain	-32 – +32 (-12.00dB – +12.00dB)	
		38	1		reserved		
		39	1	00 – 7F	Assignable Knob 1 Value	-64 – +63	
		3A	1	00 – 7F	Assignable Knob 2 Value	-64 – +63	
		3B	1	00 – 01	Assignable Function 1 Mode	momentary, latch	
		3C	1	00 – 01	Assignable Function 2 Mode	momentary, latch	
		3D	1	00 – 01	RB Mode	hold, reset	
		3E	1		reserved		
		3F	1		reserved		
		40	1	00 – 7F	Volume	0 – 127	
		41	1	00 – 01	Key Assign Mode	single, multi	
		42	1	00 – 01	Mono/Poly Mode	mono, poly	
		43	1	00 – 14	Micro Tuning Scale	Equal, PureMajor, PureMinor, Werckmeist, Kirnberger, Vallot&Yng, 1/4 Shift, 1/4 Tone, 1/8 Tone, Indian, Arabic 1, Arabic 2, Arabic 3, User 1, User 2, User 3, User 4, User 5, User 6, User 7, User 8	
		44	1	00 – 0B	Micro Tuning Root	C – B	
		45	1	10 – 58	Pitch Bend Range Upper	-48 – +24 [semitones]	

Address			Size	Data Range (HEX)	Parameter Name	Description	Notes
		46	1	10 – 58	Pitch Bend Range Lower	-48 – +24 [semitones]	
		47	1	00 – 01	Portamento Mode	fingered, fulltime	
		48	1	00 – 01	Portamento Switch	off, on	
		49	1	00 – 7F	Portamento Time	0 – 127	
		4A	1	00 – 03	Portamento Time Mode	rate1, time1, rate2, time2	
		4B	1	00 – 07	Legato Slope	0 – 7	
		4C	1	00 – 7F	Reverb Send	-∞dB – 0dB	
		4D	1	00 – 7F	Chorus Send	-∞dB – 0dB	
		4E	1	00 – 03	Insertion Connect Type	parallel, ins A → B, ins B → A, ins L	
		4F	1		reserved		
		50	1		reserved		
		51	1		reserved		

TOTAL SIZE = 82 52 (HEX)

Address			Size	Data Range (HEX)	Parameter Name	Description	Notes
40	30	00	1	00 – 04	ARP SF Select	SF1 – SF5	
		01	2	00 – 02 00 – 7F	ARP Tempo MSB ARP Tempo LSB	5 – 300 1st bit6-0 → bit13-7 2nd bit6-0 → bit6-0	
		03	1		reserved		
		04	1		reserved		
		05	2		reserved		
		07	2		reserved		
		09	2		reserved		
		0B	2		reserved		
		0D	1	00 – 01	ARP Switch	off, on	
		0E	1		reserved		
		0F	1		reserved		
		10	1		reserved		
		11	1		reserved		
		12	1		reserved		
		13	1	00 – 01	ARP Loop	off, on	
		14	1	00 – 02	ARP Hold	sync-off, off, on	
		15	1	00 – 06	ARP Unit Multiply	50%, 66%, 75%, 100%, 133%, 150%, 200%	
		16	1	00 – 7F	ARP Note Limit Low	C-2 – G8	
		17	1	00 – 7F	ARP Note Limit High	C-2 – G8	
		18	1	01 – 7F	ARP Velocity Limit Low	1 – 127	
		19	1	01 – 7F	ARP Velocity Limit High	1 – 127	
		1A	1	00 – 04	ARP Key Mode	sort, thru, direct, sort+direct, thru+direct	
		1B	1	00 – 01	ARP Vel Mode	original, thru	
		1C	1	00 – 01	ARP Change Timing	realtime, measure	
		1D	1	01 – 07	ARP Quantize Value	32th, 16th Triplet, 16th, 8th Triplet, 8th, 4th Triplet, 4th	
		1E	1	00 – 64	ARP Quantize Strength	0 – 100%	
		1F	2	00 – 01 00 – 7F	ARP Velocity Rate MSB ARP Velocity Rate LSB	0 – 200% 1st bit6-0 → bit13-7 2nd bit6-0 → bit6-0	
		21	2	00 – 01 00 – 7F	ARP Gate Time Rate MSB ARP Gate Time Rate LSB	0 – 200% 1st bit6-0 → bit13-7 2nd bit6-0 → bit6-0	
		23	2		reserved		
		25	2		reserved		
		27	2	00 – 01 00 – 7F	ARP Swing MSB ARP Swing LSB	-120 – 0 – +120 1st bit6-0 → bit13-7 2nd bit6-0 → bit6-0	
		29	1	00 – 7F	ARP Accent Velocity Threshold	off, 1 – 127	
		2A	1	00 – 01	ARP Accent Start Quantize	off, on	
		2B	1	3D – 43	ARP Octave Range	-3 – 0 – +3	
		2C	1	36 – 4A	ARP Output Octave Shift	-10 – 0 – +10	
		2D	1	00 – 01	ARP Trigger Mode	gate, toggle	
		2E	1	00 – 01	ARP Random SFX	off, on	
		2F	1	00 – 01	ARP Random SFX Key On Control	off, on	
		30	1	00 – 7F	ARP Random SFX Velocity Offset	-64 – 0 – +63	
		31	2	00 – 01 00 – 7F	ARP Assign Velocity Rate Offset SF1 MSB ARP Assign Velocity Rate Offset SF1 LSB	-100 – 0 – +100 1st bit6-0 → bit13-7 2nd bit6-0 → bit6-0	
		33	2	00 – 01 00 – 7F	ARP Assign Gate Time Offset SF1 MSB ARP Assign Gate Time Offset SF1 LSB	:	
		35	2	00 – 01 00 – 7F	ARP Assign Velocity Rate Offset SF2 MSB ARP Assign Velocity Rate Offset SF2 LSB	:	
		37	2	00 – 01 00 – 7F	ARP Assign Gate Time Offset SF2 MSB ARP Assign Gate Time Offset SF2 LSB	:	
		39	2	00 – 01 00 – 7F	ARP Assign Velocity Rate Offset SF3 MSB ARP Assign Velocity Rate Offset SF3 LSB	:	
		3B	2	00 – 01 00 – 7F	ARP Assign Gate Time Offset SF3 MSB ARP Assign Gate Time Offset SF3 LSB	:	
		3D	2	00 – 01 00 – 7F	ARP Assign Velocity Rate Offset SF4 MSB ARP Assign Velocity Rate Offset SF4 LSB	:	
		3F	2	00 – 01 00 – 7F	ARP Assign Gate Time Offset SF4 MSB ARP Assign Gate Time Offset SF4 LSB	:	

Address			Size	Data Range (HEX)	Parameter Name	Description	Notes
		41	2	00 – 01 00 – 7F	ARP Assign Velocity Rate Offset SF5 MSB ARP Assign Velocity Rate Offset SF5 LSB	:	
		43	2	00 – 01 00 – 7F	ARP Assign Gate Time Offset SF5 MSB ARP Assign Gate Time Offset SF5 LSB	:	
		45	2	00 – 41 00 – 7F	ARP SF1 Assign Type MSB ARP SF1 Assign Type LSB	off, Preset 0001 – 7881, User 001 – 256 1st bit6-0 → bit13-7 2nd bit6-0 → bit6-0	MA_Pf Arp1
		47	2	00 – 41 00 – 7F	ARP SF2 Assign Type MSB ARP SF2 Assign Type LSB	:	off
		49	2	00 – 41 00 – 7F	ARP SF3 Assign Type MSB ARP SF3 Assign Type LSB	:	off
		4B	2	00 – 41 00 – 7F	ARP SF4 Assign Type MSB ARP SF4 Assign Type LSB	:	off
		4D	2	00 – 41 00 – 7F	ARP SF5 Assign Type MSB ARP SF5 Assign Type LSB	:	off

TOTAL SIZE = 79 4F (HEX)

Address			Size	Data Range (HEX)	Parameter Name	Description	Notes
40	01	00	2	00 – 7F 00 – 7F	Reverb Type MSB Reverb Type LSB	Refer to "Effect Parameter List."	
		02	1	00 – 7F	Reverb Template Number		
		03	2	00 – 7F 00 – 7F	Reverb Parameter 1 MSB Reverb Parameter 1 LSB	:	
		05	2	00 – 7F 00 – 7F	Reverb Parameter 2 MSB Reverb Parameter 2 LSB	:	
		07	2	00 – 7F 00 – 7F	Reverb Parameter 3 MSB Reverb Parameter 3 LSB	:	
		09	2	00 – 7F 00 – 7F	Reverb Parameter 4 MSB Reverb Parameter 4 LSB	:	
		0B	2	00 – 7F 00 – 7F	Reverb Parameter 5 MSB Reverb Parameter 5 LSB	:	
		0D	2	00 – 7F 00 – 7F	Reverb Parameter 6 MSB Reverb Parameter 6 LSB	:	
		0F	2	00 – 7F 00 – 7F	Reverb Parameter 7 MSB Reverb Parameter 7 LSB	:	
		11	2	00 – 7F 00 – 7F	Reverb Parameter 8 MSB Reverb Parameter 8 LSB	:	
		13	2	00 – 7F 00 – 7F	Reverb Parameter 9 MSB Reverb Parameter 9 LSB	:	
		15	2	00 – 7F 00 – 7F	Reverb Parameter 10 MSB Reverb Parameter 10 LSB	:	
		17	2	00 – 7F 00 – 7F	Reverb Parameter 11 MSB Reverb Parameter 11 LSB	:	
		19	2	00 – 7F 00 – 7F	Reverb Parameter 12 MSB Reverb Parameter 12 LSB	:	
		1B	2	00 – 7F 00 – 7F	Reverb Parameter 13 MSB Reverb Parameter 13 LSB	:	
		1D	2	00 – 7F 00 – 7F	Reverb Parameter 14 MSB Reverb Parameter 14 LSB	:	
		1F	2	00 – 7F 00 – 7F	Reverb Parameter 15 MSB Reverb Parameter 15 LSB	:	
		21	2	00 – 7F 00 – 7F	Reverb Parameter 16 MSB Reverb Parameter 16 LSB	:	
		23	1	00 – 7F	Reverb Return	-∞dB – 0dB – +6dB (0 – 96 – 127)	
		24	1	01 – 7F	Reverb Pan	L63 – C – R63	

TOTAL SIZE = 37 25 (HEX)

Address			Size	Data Range (HEX)	Parameter Name	Description	Notes
40	02	00	2	00 – 7F 00 – 7F	Chorus Type MSB Chorus Type LSB	Refer to "Effect Parameter List."	
		02	1	00 – 7F	Chorus Template Number		
		03	2	00 – 7F 00 – 7F	Chorus Parameter 1 MSB Chorus Parameter 1 LSB	:	
		05	2	00 – 7F 00 – 7F	Chorus Parameter 2 MSB Chorus Parameter 2 LSB	:	
		07	2	00 – 7F 00 – 7F	Chorus Parameter 3 MSB Chorus Parameter 3 LSB	:	
		09	2	00 – 7F 00 – 7F	Chorus Parameter 4 MSB Chorus Parameter 4 LSB	:	
		0B	2	00 – 7F 00 – 7F	Chorus Parameter 5 MSB Chorus Parameter 5 LSB	:	
		0D	2	00 – 7F 00 – 7F	Chorus Parameter 6 MSB Chorus Parameter 6 LSB	:	
		0F	2	00 – 7F 00 – 7F	Chorus Parameter 7 MSB Chorus Parameter 7 LSB	:	
		11	2	00 – 7F 00 – 7F	Chorus Parameter 8 MSB Chorus Parameter 8 LSB	:	
		13	2	00 – 7F 00 – 7F	Chorus Parameter 9 MSB Chorus Parameter 9 LSB	:	
		15	2	00 – 7F 00 – 7F	Chorus Parameter 10 MSB Chorus Parameter 10 LSB	:	
		17	2	00 – 7F 00 – 7F	Chorus Parameter 11 MSB Chorus Parameter 11 LSB	:	
		19	2	00 – 7F 00 – 7F	Chorus Parameter 12 MSB Chorus Parameter 12 LSB	:	
		1B	2	00 – 7F 00 – 7F	Chorus Parameter 13 MSB Chorus Parameter 13 LSB	:	
		1D	2	00 – 7F 00 – 7F	Chorus Parameter 14 MSB Chorus Parameter 14 LSB	:	
		1F	2	00 – 7F 00 – 7F	Chorus Parameter 15 MSB Chorus Parameter 15 LSB	:	
		21	2	00 – 7F 00 – 7F	Chorus Parameter 16 MSB Chorus Parameter 16 LSB	:	
		23	1	00 – 7F	Chorus Return	-∞dB – 0dB – +6dB (0 – 96 – 127)	
		24	1	01 – 7F	Chorus Pan	L63 – C – R63	
		25	1	00 – 7F	Send Chorus To Reverb	-∞dB – 0dB (0 – 127)	

TOTAL SIZE = 38 26 (HEX)

Address			Size	Data Range (HEX)	Parameter Name	Description	Notes
40	03	00	2	00 – 7F 00 – 7F	Insertion-A Type MSB Insertion-A Type LSB	Refer to "Effect Parameter List."	
		02	1	00 – 7F	Insertion-A Template Number		
		03	2	00 – 7F 00 – 7F	Insertion-A Parameter 1 MSB Insertion-A Parameter 1 LSB	:	
		05	2	00 – 7F 00 – 7F	Insertion-A Parameter 2 MSB Insertion-A Parameter 2 LSB	:	
		07	2	00 – 7F 00 – 7F	Insertion-A Parameter 3 MSB Insertion-A Parameter 3 LSB	:	
		09	2	00 – 7F 00 – 7F	Insertion-A Parameter 4 MSB Insertion-A Parameter 4 LSB	:	
		0B	2	00 – 7F 00 – 7F	Insertion-A Parameter 5 MSB Insertion-A Parameter 5 LSB	:	
		0D	2	00 – 7F 00 – 7F	Insertion-A Parameter 6 MSB Insertion-A Parameter 6 LSB	:	
		0F	2	00 – 7F 00 – 7F	Insertion-A Parameter 7 MSB Insertion-A Parameter 7 LSB	:	
		11	2	00 – 7F 00 – 7F	Insertion-A Parameter 8 MSB Insertion-A Parameter 8 LSB	:	
		13	2	00 – 7F 00 – 7F	Insertion-A Parameter 9 MSB Insertion-A Parameter 9 LSB	:	
		15	2	00 – 7F 00 – 7F	Insertion-A Parameter 10 MSB Insertion-A Parameter 10 LSB	:	
		17	2	00 – 7F 00 – 7F	Insertion-A Parameter 11 MSB Insertion-A Parameter 11 LSB	:	
		19	2	00 – 7F 00 – 7F	Insertion-A Parameter 12 MSB Insertion-A Parameter 12 LSB	:	
		1B	2	00 – 7F 00 – 7F	Insertion-A Parameter 13 MSB Insertion-A Parameter 13 LSB	:	
		1D	2	00 – 7F 00 – 7F	Insertion-A Parameter 14 MSB Insertion-A Parameter 14 LSB	:	
		1F	2	00 – 7F 00 – 7F	Insertion-A Parameter 15 MSB Insertion-A Parameter 15 LSB	:	
		21	2	00 – 7F 00 – 7F	Insertion-A Parameter 16 MSB Insertion-A Parameter 16 LSB	:	

TOTAL SIZE = 35 23 (HEX)

Address			Size	Data Range (HEX)	Parameter Name	Description	Notes
40	04	00	2	00 – 7F 00 – 7F	Insertion-B Type MSB Insertion-B Type LSB	Refer to "Effect Parameter List."	
		02	1	00 – 7F	Insertion-B Template Number		
		03	2	00 – 7F 00 – 7F	Insertion-B Parameter 1 MSB Insertion-B Parameter 1 LSB	:	
		05	2	00 – 7F 00 – 7F	Insertion-B Parameter 2 MSB Insertion-B Parameter 2 LSB	:	
		07	2	00 – 7F 00 – 7F	Insertion-B Parameter 3 MSB Insertion-B Parameter 3 LSB	:	
		09	2	00 – 7F 00 – 7F	Insertion-B Parameter 4 MSB Insertion-B Parameter 4 LSB	:	
		0B	2	00 – 7F 00 – 7F	Insertion-B Parameter 5 MSB Insertion-B Parameter 5 LSB	:	
		0D	2	00 – 7F 00 – 7F	Insertion-B Parameter 6 MSB Insertion-B Parameter 6 LSB	:	
		0F	2	00 – 7F 00 – 7F	Insertion-B Parameter 7 MSB Insertion-B Parameter 7 LSB	:	
		11	2	00 – 7F 00 – 7F	Insertion-B Parameter 8 MSB Insertion-B Parameter 8 LSB	:	
		13	2	00 – 7F 00 – 7F	Insertion-B Parameter 9 MSB Insertion-B Parameter 9 LSB	:	
		15	2	00 – 7F 00 – 7F	Insertion-B Parameter 10 MSB Insertion-B Parameter 10 LSB	:	
		17	2	00 – 7F 00 – 7F	Insertion-B Parameter 11 MSB Insertion-B Parameter 11 LSB	:	
		19	2	00 – 7F 00 – 7F	Insertion-B Parameter 12 MSB Insertion-B Parameter 12 LSB	:	
		1B	2	00 – 7F 00 – 7F	Insertion-B Parameter 13 MSB Insertion-B Parameter 13 LSB	:	
		1D	2	00 – 7F 00 – 7F	Insertion-B Parameter 14 MSB Insertion-B Parameter 14 LSB	:	
		1F	2	00 – 7F 00 – 7F	Insertion-B Parameter 15 MSB Insertion-B Parameter 15 LSB	:	
		21	2	00 – 7F 00 – 7F	Insertion-B Parameter 16 MSB Insertion-B Parameter 16 LSB	:	

TOTAL SIZE = 35 23 (HEX)

Address			Size	Data Range (HEX)	Parameter Name	Description	Notes
40	05	00	2	00 – 7F 00 – 7F	Insertion-L Type MSB Insertion-L Type LSB	Refer to "Effect Parameter List."	
		02	1	00 – 7F	Insertion-L Template Number		
		03	2	00 – 7F 00 – 7F	Insertion-L Parameter 1 MSB Insertion-L Parameter 1 LSB	:	
		05	2	00 – 7F 00 – 7F	Insertion-L Parameter 2 MSB Insertion-L Parameter 2 LSB	:	
		07	2	00 – 7F 00 – 7F	Insertion-L Parameter 3 MSB Insertion-L Parameter 3 LSB	:	
		09	2	00 – 7F 00 – 7F	Insertion-L Parameter 4 MSB Insertion-L Parameter 4 LSB	:	
		0B	2	00 – 7F 00 – 7F	Insertion-L Parameter 5 MSB Insertion-L Parameter 5 LSB	:	
		0D	2	00 – 7F 00 – 7F	Insertion-L Parameter 6 MSB Insertion-L Parameter 6 LSB	:	
		0F	2	00 – 7F 00 – 7F	Insertion-L Parameter 7 MSB Insertion-L Parameter 7 LSB	:	
		11	2	00 – 7F 00 – 7F	Insertion-L Parameter 8 MSB Insertion-L Parameter 8 LSB	:	
		13	2	00 – 7F 00 – 7F	Insertion-L Parameter 9 MSB Insertion-L Parameter 9 LSB	:	
		15	2	00 – 7F 00 – 7F	Insertion-L Parameter 10 MSB Insertion-L Parameter 10 LSB	:	
		17	2	00 – 7F 00 – 7F	Insertion-L Parameter 11 MSB Insertion-L Parameter 11 LSB	:	
		19	2	00 – 7F 00 – 7F	Insertion-L Parameter 12 MSB Insertion-L Parameter 12 LSB	:	
		1B	2	00 – 7F 00 – 7F	Insertion-L Parameter 13 MSB Insertion-L Parameter 13 LSB	:	
		1D	2	00 – 7F 00 – 7F	Insertion-L Parameter 14 MSB Insertion-L Parameter 14 LSB	:	
		1F	2	00 – 7F 00 – 7F	Insertion-L Parameter 15 MSB Insertion-L Parameter 15 LSB	:	
		21	2	00 – 7F 00 – 7F	Insertion-L Parameter 16 MSB Insertion-L Parameter 16 LSB	:	
		23	2	00 – 7F 00 – 7F	Insertion-L Parameter 17 MSB Insertion-L Parameter 17 LSB	:	
		25	2	00 – 7F 00 – 7F	Insertion-L Parameter 18 MSB Insertion-L Parameter 18 LSB	:	
		27	2	00 – 7F 00 – 7F	Insertion-L Parameter 19 MSB Insertion-L Parameter 19 LSB	:	
		29	2	00 – 7F 00 – 7F	Insertion-L Parameter 20 MSB Insertion-L Parameter 20 LSB	:	
		2B	2	00 – 7F 00 – 7F	Insertion-L Parameter 21 MSB Insertion-L Parameter 21 LSB	:	
		2D	2	00 – 7F 00 – 7F	Insertion-L Parameter 22 MSB Insertion-L Parameter 22 LSB	:	
		2F	2	00 – 7F 00 – 7F	Insertion-L Parameter 23 MSB Insertion-L Parameter 23 LSB	:	
		31	2	00 – 7F 00 – 7F	Insertion-L Parameter 24 MSB Insertion-L Parameter 24 LSB	:	
		33	2	00 – 7F 00 – 7F	Insertion-L Parameter 25 MSB Insertion-L Parameter 25 LSB	:	
		35	2	00 – 7F 00 – 7F	Insertion-L Parameter 26 MSB Insertion-L Parameter 26 LSB	:	
		37	2	00 – 7F 00 – 7F	Insertion-L Parameter 27 MSB Insertion-L Parameter 27 LSB	:	
		39	2	00 – 7F 00 – 7F	Insertion-L Parameter 28 MSB Insertion-L Parameter 28 LSB	:	
		3B	2	00 – 7F 00 – 7F	Insertion-L Parameter 29 MSB Insertion-L Parameter 29 LSB	:	
		3D	2	00 – 7F 00 – 7F	Insertion-L Parameter 30 MSB Insertion-L Parameter 30 LSB	:	
		3F	2	00 – 7F 00 – 7F	Insertion-L Parameter 31 MSB Insertion-L Parameter 31 LSB	:	
		41	2	00 – 7F 00 – 7F	Insertion-L Parameter 32 MSB Insertion-L Parameter 32 LSB	:	

TOTAL SIZE = 67 43 (HEX)

Address			Size	Data Range (HEX)	Parameter Name	Description	Notes
40	06	00	1	00 – 0E	Controller Set 1 Source	0: PB, 1: MW, 3: AT, 4: FC, 5: FS, 6: RB, 7: BC, 8: AS1, 9: AS2, 12: FC2, 13: AF1, 14: AF2	
		01	2	00 00 – 65	Controller Set 1 Destination MSB Controller Set 1 Destination LSB	0 – 101 1st bit6-0 → bit13-7 2nd bit6-0 → bit6-0	
		03	1	00 – 7F	Controller Set 1 Depth	-64 – +63	
		04	1		reserved		
		05	1	00 – 0E	Controller Set 2 Source	0: PB, 1: MW, 3: AT, 4: FC, 5: FS, 6: RB, 7: BC, 8: AS1, 9: AS2, 12: FC2, 13: AF1, 14: AF2	
		06	2	00 00 – 65	Controller Set 2 Destination MSB Controller Set 2 Destination LSB	0 – 101 1st bit6-0 → bit13-7 2nd bit6-0 → bit6-0	
		08	1	00 – 7F	Controller Set 2 Depth	-64 – +63	
		09	1		reserved		
		0A	1	00 – 0E	Controller Set 3 Source	0: PB, 1: MW, 3: AT, 4: FC, 5: FS, 6: RB, 7: BC, 8: AS1, 9: AS2, 12: FC2, 13: AF1, 14: AF2	
		0B	2	00 00 – 65	Controller Set 3 Destination MSB Controller Set 3 Destination LSB	0 – 101 1st bit6-0 → bit13-7 2nd bit6-0 → bit6-0	
		0D	1	00 – 7F	Controller Set 3 Depth	-64 – +63	
		0E	1		reserved		
		0F	1	00 – 0E	Controller Set 4 Source	0: PB, 1: MW, 3: AT, 4: FC, 5: FS, 6: RB, 7: BC, 8: AS1, 9: AS2, 12: FC2, 13: AF1, 14: AF2	
		10	2	00 00 – 65	Controller Set 4 Destination MSB Controller Set 4 Destination LSB	0 – 101 1st bit6-0 → bit13-7 2nd bit6-0 → bit6-0	
		12	1	00 – 7F	Controller Set 4 Depth	-64 – +63	
		13	1		reserved		
		14	1	00 – 0E	Controller Set 5 Source	0: PB, 1: MW, 3: AT, 4: FC, 5: FS, 6: RB, 7: BC, 8: AS1, 9: AS2, 12: FC2, 13: AF1, 14: AF2	
		15	2	00 00 – 65	Controller Set 5 Destination MSB Controller Set 5 Destination LSB	0 – 101 1st bit6-0 → bit13-7 2nd bit6-0 → bit6-0	
		17	1	00 – 7F	Controller Set 5 Depth	-64 – +63	
		18	1		reserved		
		19	1	00 – 0E	Controller Set 6 Source	0: PB, 1: MW, 3: AT, 4: FC, 5: FS, 6: RB, 7: BC, 8: AS1, 9: AS2, 12: FC2, 13: AF1, 14: AF2	
		1A	2	00 00 – 65	Controller Set 6 Destination MSB Controller Set 6 Destination LSB	0 – 101 1st bit6-0 → bit13-7 2nd bit6-0 → bit6-0	
		1C	1	00 – 7F	Controller Set 6 Depth	-64 – +63	
		1D	1		reserved		
		1E	1	00 – 05	LFO Phase	0, 90, 120, 180, 240, 270	
		1F	1	00 – 0C	LFO Wave	triangle, triangle+, saw up, saw down, squ1/4, squ1/3, squ, squ2/3, squ3/4, trapezoid, S/H1, S/H2, user	
		20	1	00 – 3F	LFO Speed	0 – 63	Available only when the Tempo Sync is set to off
		21	1	05 – 18	LFO Tempo Speed	5 – 24 (16th, 8th/3, 16th., 8th, 4th/3, 8th., 4th, 2th/3, 4th., 2nd, Whole/3, 2nd., 4thX4, 4thX5, 4thX6, 4thX7, 4thX8, 4thX16, 4thX32, 4thX64)	Available only when the Tempo Sync is set to on
		22	1	00 – 01	LFO Tempo Sync	off, on	
		23	1	00 – 7F	LFO Delay Time	0 – 127	
		24	1	00 – 7F	LFO Fade In Time	0 – 127	
		25	1	00 – 7F	LFO Hold Time	0 – 127	
		26	1	00 – 7F	LFO Fade Out Time	0 – 127	
		27	1	00 – 02	LFO Key On Reset	off, each-on, 1st-on	
		28	1	00 – 01	LFO Play Mode	loop, one shot	
		29	1	00 – 45	LFO Box 1 Destination	0 – 69	
		2A	1	00 – 7F	LFO Box 1 Depth	0 – 127	
		2B	1		reserved		
		2C	1	00 – 45	LFO Box 2 Destination	0 – 69	
		2D	1	00 – 7F	LFO Box 2 Depth	0 – 127	
		2E	1		reserved		
		2F	1	00 – 45	LFO Box 3 Destination	0 – 69	
		30	1	00 – 7F	LFO Box 3 Depth	0 – 127	
		31	1		reserved		
		32	1	00 – 06	User Wave Total Step	2, 3, 4, 6, 8, 12, 16	
		33	1	00 – 03	User Wave Slope	off, up, down, up&down	
		34	1	00 – 7F	User Wave Step Value 1	0 – 127	
		35	1	00 – 7F	User Wave Step Value 2	0 – 127	
		36	1	00 – 7F	User Wave Step Value 3	0 – 127	
		37	1	00 – 7F	User Wave Step Value 4	0 – 127	
		38	1	00 – 7F	User Wave Step Value 5	0 – 127	
		39	1	00 – 7F	User Wave Step Value 6	0 – 127	
		3A	1	00 – 7F	User Wave Step Value 7	0 – 127	
		3B	1	00 – 7F	User Wave Step Value 8	0 – 127	
		3C	1	00 – 7F	User Wave Step Value 9	0 – 127	
		3D	1	00 – 7F	User Wave Step Value 10	0 – 127	
		3E	1	00 – 7F	User Wave Step Value 11	0 – 127	
		3F	1	00 – 7F	User Wave Step Value 12	0 – 127	
		40	1	00 – 7F	User Wave Step Value 13	0 – 127	
		41	1	00 – 7F	User Wave Step Value 14	0 – 127	
		42	1	00 – 7F	User Wave Step Value 15	0 – 127	
		43	1	00 – 7F	User Wave Step Value 16	0 – 127	
		44	1	00 – 7F	LFO Random Speed Depth	0 – 127	Available only when the Tempo Sync is set to off

TOTAL SIZE = 69 45 (HEX)

MIDI PARAMETER CHANGE TABLE (NORMAL VOICE ELEMENT)

Address			Size	Data Range (HEX)	Parameter Name	Description	Notes
41	ee	00	1	00 – 01	Element Assign	off, on	
		01	1	00 – 03	Wave Select	0=PRE, 1=USR, 2=FL1, 3=FL2	
		02	1	00 – 07	Element Group Number	0 – 7	
		03	2	00 – 1F 00 – 7F	Wave Number MSB Wave Number LSB	1 – 3977 (USR: 1 – 128, FL1/FL2: 1 – 2048) 1st bit6-0 → bit13-7 2nd bit6-0 → bit6-0	
		05	1	01	Rcv Note Off	on	
		06	1	01	Key Assign	1=multi	
		07	1	00	Alternate Group	0=off	
		08	1	01 – 7F	Pan	L63 – C – R63	
		09	1	00 – 7F	Random Pan Depth	0 – 127	
		0A	1	00 – 7F	Alternate Pan Depth	L64 – 0 – R63	
		0B	1	00 – 7F	Scaling Pan Depth	-64 – +63	
		0C	1	00 – 07	XA Control	normal, legato, key off sound, wave cycle, wave random, all AF off, AF 1 on, AF 2 on	
		0D	1	00 – 7F	Note Limit Low	0 – 127	
		0E	1	00 – 7F	Note Limit High	0 – 127	
		0F	1	01 – 7F	Velocity Limit Low	1 – 127	
		10	1	01 – 7F	Velocity Limit High	1 – 127	
		11	1	00 – 7F	Velocity Cross Fade	0 – 127	
		12	1	00 – 7F	Key On Delay	0 – 127	Available only when the Tempo Sync is set to off
		13	1	00 – 01	Key On Delay Tempo Sync	off, on	
		14	1	7F	Element Reverb Send Level	127	
		15	1	7F	Element Chorus Send Level	127	
		16	1		reserved		
		17	1	00 – 02	Insertion Effect Switch	thru, insA, insB	
		18	1	00	Output Select	0=stereo out	
		19	2	00 00 – 3F	Control Box Switch MSB Control Box Switch LSB	1st bit6-0: reserved 2nd bit6: reserved 2nd bit5: off, on set 6 2nd bit4: off, on set 5 2nd bit3: off, on set 4 2nd bit2: off, on set 3 2nd bit1: off, on set 2 2nd bit0: off, on set 1	
		1B	2	00 00 – 07	LFO Box Switch MSB LFO Box Switch LSB	1st bit6-0: reserved 2nd bit6-3: reserved 2nd bit2: off, on box 3 2nd bit1: off, on box 2 2nd bit0: off, on box 1	
		1D	1	05 – 15	Key On Delay Tempo	5 – 21 (16th, 8th/3, 16th., 8th, 4th/3, 8th., 4th, 2th/3, 4th., 2nd, Whole/3, 2nd., 4thX4, 4thX5, 4thX6, 4thX7, 4thX8)	Available only when the Tempo Sync is set to on
		1E	1	00 – 01	Half Damper Switch	off, on	
		1F	1		reserved		
		20	1	00 – 7F	Element Level	0 – 127	
		21	1	00 – 7F	Level Velocity Sensitivity	-64 – +63	
		22	1	00 – 7F	Level Velocity Offset	0 – 127	
		23	1	00 – 04	Level Sens Key Curve	00 – 04	
		24	1		reserved		
		25	1	00 – 7F	AEG Attack Time	0 – 127	
		26	1	00 – 7F	AEG Decay 1 Time	0 – 127	
		27	1	00 – 7F	AEG Decay 2 Time	0 – 127	
		28	1	00 – 7F	Half Damper Time	0 – 127	
		29	1	00 – 7F	AEG Release Time	0 – 127	
		2A	1	00 – 7F	AEG Init Level	0 – 127	
		2B	1	00 – 7F	AEG Attack Level	0 – 127	
		2C	1	00 – 7F	AEG Decay 1 Level	0 – 127	
		2D	1	00 – 7F	AEG Decay 2 Level	0 – 127	
		2E	1	00	reserved		
		2F	1	00 – 04	AEG Time Velocity Segment	attack, atk+dcy, decay, atk+rls, all	
		30	1	00 – 7F	AEG Time Velocity Sensitivity	-64 – +63	
		31	1	00 – 7F	AEG Time Key Follow Sensitivity	-64 – +63	
		32	1	00 – 7F	AEG Time Key Follow Center Note	C-2 – G8	
		33	1	00 – 7C	Level Scaling Break Point 1	C -2 – E8	BP1<BP2<BP3<BP4
		34	1	01 – 7D	Level Scaling Break Point 2	C#-2 – F8	:
		35	1	02 – 7E	Level Scaling Break Point 3	D -2 – F#8	:
		36	1	03 – 7F	Level Scaling Break Point 4	D#-2 – G8	:
		37	2	00 – 01 00 – 7F	Level Scaling Offset 1 MSB Level Scaling Offset 1 LSB	-128 – +127 1st bit6-0 → bit13-7 2nd bit6-0 → bit6-0	
		39	2	00 – 01 00 – 7F	Level Scaling Offset 2 MSB Level Scaling Offset 2 LSB	:	
		3B	2	00 – 01 00 – 7F	Level Scaling Offset 3 MSB Level Scaling Offset 3 LSB	:	
		3D	2	00 – 01 00 – 7F	Level Scaling Offset 4 MSB Level Scaling Offset 4 LSB	:	
		3F	1	00 – 7F	Level Key Follow Sensitivity	-200% – +200%	

Address			Size	Data Range (HEX)	Parameter Name	Description	Notes
		40	1	00 – 7F	AEG Time Key Follow Sensitivity Release Adjustment	-64 – +63	
		41	1	10 – 70	Coarse Tune	-48 – +48	
		42	1	00 – 7F	Fine Tune	-64 – +63	
		43	1	00 – 7F	Pitch Velocity Sensitivity	-64 – +63	
		44	1		reserved		
		45	1	00 – 7F	Random Pitch Depth	0 – 127	
		46	1	00 – 7F	Pitch Key Follow Sensitivity	-200% – +200%	
		47	1	00 – 7F	Pitch Key Follow Center Note	C-2 – G8	
		48	1	00 – 7F	Pitch Fine Scaling Sensitivity	-64 – +63	
		49	1	00 – 7F	PEG Hold Time	0 – 127	
		4A	1	00 – 7F	PEG Attack Time	0 – 127	
		4B	1	00 – 7F	PEG Decay 1 Time	0 – 127	
		4C	1	00 – 7F	PEG Decay 2 Time	0 – 127	
		4D	1	00 – 7F	PEG Release Time	0 – 127	
		4E	2	00 – 01 00 – 7F	PEG Hold Level MSB PEG Hold Level LSB	-128 – +127 (-4800 – +4800 [cent]) 1st bit6-0 → bit13-7 2nd bit6-0 → bit6-0	
		50	2	00 – 01 00 – 7F	PEG Attack Level MSB PEG Attack Level LSB	:	
		52	2	00 – 01 00 – 7F	PEG Decay 1 Level MSB PEG Decay 1 Level LSB	:	
		54	2	00 – 01 00 – 7F	PEG Decay 2 Level MSB PEG Decay 2 Level LSB	:	
		56	2	00 – 01 00 – 7F	PEG Release Level MSB PEG Release Level LSB	:	
		58	1	00 – 7F	PEG Depth	-64 – +63	
		59	1	00 – 04	PEG Time Velocity Segment	attack, atk+dcy, decay, atk+rls, all	
		5A	1	00 – 7F	PEG Time Velocity Sensitivity	-64 – +63	
		5B	1	00 – 7F	PEG Level Velocity Sensitivity	-64 – +63	
		5C	1	00 – 04	PEG Level Sens Velocity Curve	00 – 04	
		5D	1	00 – 7F	PEG Time Key Follow Sensitivity	-64 – +63	
		5E	1	00 – 7F	PEG Time Key Follow Center Note	C-2 – G8	

TOTAL SIZE = 95 5F (HEX)

Address			Size	Data Range (HEX)	Parameter Name	Description	Notes
42	ee	00	1	00 – 15	Filter Type	LPF24D, LPF24A, LPF18, LPF18s, LPF12, LPF6, HPF24D, HPF12, BPF12D, BPFw, BPF6, BEF12, BEF6, Dual LPF, Dual HPF, Dual BPF, Dual BEF, LPF12+BPF6, THRU	
		01	2	00 – 01 00 – 7F	Filter Cutoff Frequency MSB Filter Cutoff Frequency LSB	0 – 255 1st bit6-0 → bit13-7 2nd bit6-0 → bit6-0	
		03	1	00 – 7F	Filter Cutoff Velocity Sensitivity	-64 – +63	
		04	1		reserved		
		05	1	00 – 7F	Filter Resonance/Width/Band	0 – 127	
		06	1	00 – 7F	Filter Resonance Velocity Sensitivity	-64 – +63	
		07	2	00 – 01 00 – 7F	HPF Cutoff Frequency MSB HPF Cutoff Frequency LSB	0 – 255 1st bit6-0 → bit13-7 2nd bit6-0 → bit6-0	
		09	1		reserved		
		0A	2	00 – 01 00 – 7F	Distance MSB Distance LSB	-128 – +127 1st bit6-0 → bit13-7 2nd bit6-0 → bit6-0	Available only when the Dual Type Filter is selected
		0C	2	00 – 01 00 – 7F	Filter Gain MSB Filter Gain LSB	0 – 255 1st bit6-0 → bit13-7 2nd bit6-0 → bit6-0	
		0E	1	00 – 7F	FEG Hold Time	0 – 127	
		0F	1	00 – 7F	FEG Attack Time	0 – 127	
		10	1	00 – 7F	FEG Decay 1 Time	0 – 127	
		11	1	00 – 7F	FEG Decay 2 Time	0 – 127	
		12	1	00 – 7F	FEG Release Time	0 – 127	
		13	2	00 – 01 00 – 7F	FEG Hold Level MSB FEG Hold Level LSB	-128 – +127 (-9600 – +9600 [cent]) 1st bit6-0 → bit13-7 2nd bit6-0 → bit6-0	
		15	2	00 – 01 00 – 7F	FEG Attack Level MSB FEG Attack Level LSB	:	
		17	2	00 – 01 00 – 7F	FEG Decay1 Level MSB FEG Decay1 Level LSB	:	
		19	2	00 – 01 00 – 7F	FEG Decay2 Level MSB FEG Decay2 Level LSB	:	
		1B	2	00 – 01 00 – 7F	FEG Release Level MSB FEG Release Level LSB	:	
		1D	1	00 – 7F	FEG Depth	-64 – +63	
		1E	1	00 – 04	FEG Time Velocity Segment	attack, atk+dcy, decay, atk+rls, all	
		1F	1	00 – 7F	FEG Time Velocity Sensitivity	-64 – +63	
		20	1	00 – 7F	FEG Level Velocity Sensitivity	-64 – +63	
		21	1	00 – 04	FEG Level Velocity Curve	00 – 04	
		22	1	00 – 7F	FEG Time Key Follow Sensitivity	-64 – +63	

Address			Size	Data Range (HEX)	Parameter Name	Description	Notes
		23	1	00 – 7F	FEG Time Key Follow Center Note	C-2 – G8	
		24	1	00 – 7C	Filter Cutoff Scaling Break Point 1	C -2 – E8	BP1<BP2<BP3<BP4
		25	1	01 – 7D	Filter Cutoff Scaling Break Point 2	C# -2 – F8	:
		26	1	02 – 7E	Filter Cutoff Scaling Break Point 3	D -2 – F#8	:
		27	1	03 – 7F	Filter Cutoff Scaling Break Point 4	D# -2 – G8	:
		28	2	00 – 01 00 – 7F	Filter Cutoff Scaling Offset 1 MSB Filter Cutoff Scaling Offset 1 LSB	-128 – +127 1st bit6-0 → bit13-7 2nd bit6-0 → bit6-0	
		2A	2	00 – 01 00 – 7F	Filter Cutoff Scaling Offset 2 MSB Filter Cutoff Scaling Offset 2 LSB	:	
		2C	2	00 – 01 00 – 7F	Filter Cutoff Scaling Offset 3 MSB Filter Cutoff Scaling Offset 3 LSB	:	
		2E	2	00 – 01 00 – 7F	Filter Cutoff Scaling Offset 4 MSB Filter Cutoff Scaling Offset 4 LSB	:	
		30	1	00 – 7F	Filter Cutoff Key Follow Sensitivity	-200% – +200%	
		31	1	00 – 7F	HPF Cutoff Key Follow Sensitivity	-200% – +200%	
		32	1	00 – 05	EQ Type	2 Band, P.EQ, Boost6, Boost12, Boost18, thru	
		33	1	00 – 1F	EQ Q	0 – 31 (0.7 – 10.3)	
		34	2	00 – 01 00 – 7F	EQ 1 Frequency	50.1 – 2.00k (2 Band) 139.7 – 10.1k (P.EQ) 1st bit6-0 → bit13-7 2nd bit6-0 → bit6-0	
		36	1	20 – 60	EQ 1 Gain	-32 – +32 (-12.00dB – +12.00dB)	
		37	2	00 – 01 03 – 71	EQ 2 Frequency	503.8 – 14.0k 1st bit6-0 → bit13-7 2nd bit6-0 → bit6-0	
		39	1	20 – 60	EQ 2 Gain	-32 – +32 (-12.00dB – +12.00dB)	
		3A	1	00 – 02	LFO Wave	saw, triangle, square	
		3B	1	00 – 01	LFO Key On Sync	off, on	
		3C	1	00 – 7F	LFO Key On Delay Time	0 – 127	
		3D	1	00 – 3F	LFO Speed	0 – 63	
		3E	1	00 – 7F	LFO AMod Depth	0 – 127	
		3F	1	00 – 7F	LFO PMod Depth	0 – 127	
		40	1	00 – 7F	LFO FMod Depth	0 – 127	
		41	1	00 – 7F	LFO Fade In Time	0 – 127	
		42	1	00 – 05	Common LFO Phase Offset	+0, +90, +120, +180, +240, +270	
		43	1	00 – 7F	Common LFO Box 1 Depth Ratio	0 – 127	
		44	1	00 – 7F	Common LFO Box 2 Depth Ratio	0 – 127	
		45	1	00 – 7F	Common LFO Box 3 Depth Ratio	0 – 127	

TOTAL SIZE = 70 46 (HEX)

MIDI PARAMETER CHANGE TABLE (DRUM VOICE COMMON)

Address			Size	Data Range (HEX)	Parameter Name	Description	Notes
46	00	00	1	00, 20 – 7E	Voice Name 1	0, 32 – 126 (ASCII)	
		01	1	00, 20 – 7E	Voice Name 2	0, 32 – 126 (ASCII)	
		02	1	00, 20 – 7E	Voice Name 3	0, 32 – 126 (ASCII)	
		03	1	00, 20 – 7E	Voice Name 4	0, 32 – 126 (ASCII)	
		04	1	00, 20 – 7E	Voice Name 5	0, 32 – 126 (ASCII)	
		05	1	00, 20 – 7E	Voice Name 6	0, 32 – 126 (ASCII)	
		06	1	00, 20 – 7E	Voice Name 7	0, 32 – 126 (ASCII)	
		07	1	00, 20 – 7E	Voice Name 8	0, 32 – 126 (ASCII)	
		08	1	00, 20 – 7E	Voice Name 9	0, 32 – 126 (ASCII)	
		09	1	00, 20 – 7E	Voice Name 10	0, 32 – 126 (ASCII)	
		0A	1	00, 20 – 7E	Voice Name 11	0, 32 – 126 (ASCII)	
		0B	1	00, 20 – 7E	Voice Name 12	0, 32 – 126 (ASCII)	
		0C	1	00, 20 – 7E	Voice Name 13	0, 32 – 126 (ASCII)	
		0D	1	00, 20 – 7E	Voice Name 14	0, 32 – 126 (ASCII)	
		0E	1	00, 20 – 7E	Voice Name 15	0, 32 – 126 (ASCII)	
		0F	1	00, 20 – 7E	Voice Name 16	0, 32 – 126 (ASCII)	
		10	1	00, 20 – 7E	Voice Name 17	0, 32 – 126 (ASCII)	
		11	1	00, 20 – 7E	Voice Name 18	0, 32 – 126 (ASCII)	
		12	1	00, 20 – 7E	Voice Name 19	0, 32 – 126 (ASCII)	
		13	1	00, 20 – 7E	Voice Name 20	0, 32 – 126 (ASCII)	
		14	1		reserved		
		15	1		reserved		
		16	1		reserved		
		17	1		reserved		
		18	1	00 – 10	Voice Category 1 (Main)	0 – 16	Refer to "Category List"
		19	1	00 – 05	Voice Category 1 (Sub)	0 – 5	:
		1A	1	00 – 10	Voice Category 2 (Main)	0 – 16	:
		1B	1	00 – 05	Voice Category 2 (Sub)	0 – 5	:
		1C	1		reserved		
		1D	1		reserved		
		1E	1	00 – 02	Knob Function Select	0=tone1, 1=tone2, 2=ARP FX	
		1F	1	01 – 7F	Pan	L63 – C – R63	
		20	1		reserved		
		21	1	00 – 7F	AEG Attack Time	-64 – +63	
		22	1	00 – 7F	AEG Decay Time	-64 – +63	
		23	1		reserved		
		24	1		reserved		
		25	1		reserved		
		26	1		reserved		
		27	1		reserved		
		28	1		reserved		
		29	1		reserved		
		2A	1	00 – 7F	Cutoff Frequency	-64 – +63	
		2B	1	00 – 7F	Resonance	-64 – +63	
		2C	1		reserved		
		2D	2	00 – 01 00 – 7F	EQ Low Frequency MSB EQ Low Frequency LSB	50.1 – 2.00k 1st bit6-0 → bit13-7 2nd bit6-0 → bit6-0	
		2F	1	20 – 60	EQ Low Gain	-32 – +32 (-12.00dB – +12.00dB)	
		30	1		reserved		
		31	2	00 – 01 00 – 7F	EQ Mid Frequency MSB EQ Mid Frequency LSB	139.7 – 10.1k 1st bit6-0 → bit13-7 2nd bit6-0 → bit6-0	
		33	1	20 – 60	EQ Mid Gain	-32 – +32 (-12.00dB – +12.00dB)	
		34	1	00 – 1F	EQ Mid Q	0 – 31 (0.7 – 10.3)	
		35	2	01 03 – 7F	EQ High Frequency MSB EQ High Frequency LSB	503.8 – 14.0k 1st bit6-0 → bit13-7 2nd bit6-0 → bit6-0	
		37	1	20 – 60	EQ High Gain	-32 – +32 (-12.00dB – +12.00dB)	
		38	1		reserved		
		39	1	00 – 7F	Assignable Knob 1 Value	-64 – +63	
		3A	1	00 – 7F	Assignable Knob 2 Value	-64 – +63	
		3B	1	00 – 01	Assignable Function 1 Mode	momentary, latch	
		3C	1	00 – 01	Assignable Function 2 Mode	momentary, latch	
		3D	1	00 – 01	RB Mode	hold, reset	
		3E	1		reserved		
		3F	1		reserved		
		40	1	00 – 7F	Volume	0 – 127	
		41	1		reserved		
		42	1	10 – 58	Pitch Bend Range Upper	-48 – +24 [semitones]	
		43	1	10 – 58	Pitch Bend Range Lower	-48 – +24 [semitones]	
		44	1	00 – 7F	Reverb Send	-∞dB – 0dB	
		45	1	00 – 7F	Chorus Send	-∞dB – 0dB	
		46	1	00 – 03	Insertion Connect Type	parallel, ins A → B, ins B → A, vocoder	
		47	1	00 – 7F	Ins-EF Reverb Send Level	0 – 127	
		48	1	00 – 7F	Ins-EF Chorus Send Level	0 – 127	
		49	1		reserved		

TOTAL SIZE = 74 4A (HEX)

Address			Size	Data Range (HEX)	Parameter Name	Description	Notes
46	30	00	1	00 – 04	ARP SF Select	SF1 – SF5	
		01	2	00 – 02 00 – 7F	ARP Tempo MSB ARP Tempo LSB	5 – 300 1st bit6-0 → bit13-7 2nd bit6-0 → bit6-0	
		03	1		reserved		
		04	1		reserved		
		05	2		reserved		
		07	2		reserved		
		09	2		reserved		
		0B	2		reserved		
		0D	1	00 – 01	ARP Switch	off, on	
		0E	1		reserved		
		0F	1		reserved		
		10	1		reserved		
		11	1	00 – 01	ARP Fixed SD/BD	off, on	
		12	1		reserved		
		13	1	00 – 01	ARP Loop	off, on	
		14	1	00 – 02	ARP Hold	sync-off, off, on	
		15	1	00 – 06	ARP Unit Multiply	50%, 66%, 75%, 100%, 133%, 150%, 200%	
		16	1	00 – 7F	ARP Note Limit Low	C-2 – G8	
		17	1	00 – 7F	ARP Note Limit High	C-2 – G8	
		18	1	01 – 7F	ARP Velocity Limit Low	1 – 127	
		19	1	01 – 7F	ARP Velocity Limit High	1 – 127	
		1A	1	00 – 04	ARP Key Mode	sort, thru, direct, sort+direct, thru+direct	
		1B	1	00 – 01	ARP Vel Mode	original, thru	
		1C	1	00 – 01	ARP Change Timing	realtime, measure	
		1D	1	01 – 07	ARP Quantize Value	32th, 16th_Triplet, 16th, 8th_Triplet, 8th, 4th_Triplet, 4th	
		1E	1	00 – 64	ARP Quantize Strength	0 – 100%	
		1F	2	00 – 01 00 – 7F	ARP Velocity Rate MSB ARP Velocity Rate LSB	0 – 200% 1st bit6-0 → bit13-7 2nd bit6-0 → bit6-0	
		21	2	00 – 01 00 – 7F	ARP Gate Time Rate MSB ARP Gate Time Rate LSB	0 – 200% 1st bit6-0 → bit13-7 2nd bit6-0 → bit6-0	
		23	2		reserved		
		25	2		reserved		
		27	2	00 – 01 00 – 7F	ARP Swing MSB ARP Swing LSB	-120 – 0 – +120 1st bit6-0 → bit13-7 2nd bit6-0 → bit6-0	
		29	1	00 – 7F	ARP Accent Velocity Threshold	off, 1 – 127	
		2A	1	00 – 01	ARP Accent Start Quantize	off, on	
		2B	1	3D – 43	ARP Octave Range	-3 – 0 – +3	
		2C	1	36 – 4A	ARP Output Octave Shift	-10 – 0 – +10	
		2D	1	00 – 01	ARP Trigger Mode	gate, toggle	
		2E	1	00 – 01	ARP Random SFX	off, on	
		2F	1	00 – 01	ARP Random SFX Key On Control	off, on	
		30	1	00 – 7F	ARP Random SFX Velocity Offset	-64 – 0 – +63	
		31	2	00 – 01 00 – 7F	ARP Assign Velocity Rate Offset SF1 MSB ARP Assign Velocity Rate Offset SF1 LSB	-100 – 0 – +100 1st bit6-0 → bit13-7 2nd bit6-0 → bit6-0	
		33	2	00 – 01 00 – 7F	ARP Assign Gate Time Offset SF1 MSB ARP Assign Gate Time Offset SF1 LSB	:	
		35	2	00 – 01 00 – 7F	ARP Assign Velocity Rate Offset SF2 MSB ARP Assign Velocity Rate Offset SF2 LSB	:	
		37	2	00 – 01 00 – 7F	ARP Assign Gate Time Offset SF2 MSB ARP Assign Gate Time Offset SF2 LSB	:	
		39	2	00 – 01 00 – 7F	ARP Assign Velocity Rate Offset SF3 MSB ARP Assign Velocity Rate Offset SF3 LSB	:	
		3B	2	00 – 01 00 – 7F	ARP Assign Gate Time Offset SF3 MSB ARP Assign Gate Time Offset SF3 LSB	:	
		3D	2	00 – 01 00 – 7F	ARP Assign Velocity Rate Offset SF4 MSB ARP Assign Velocity Rate Offset SF4 LSB	:	
		3F	2	00 – 01 00 – 7F	ARP Assign Gate Time Offset SF4 MSB ARP Assign Gate Time Offset SF4 LSB	:	
		41	2	00 – 01 00 – 7F	ARP Assign Velocity Rate Offset SF5 MSB ARP Assign Velocity Rate Offset SF5 LSB	:	
		43	2	00 – 01 00 – 7F	ARP Assign Gate Time Offset SF5 MSB ARP Assign Gate Time Offset SF5 LSB	:	
		45	2	00 – 41 00 – 7F	ARP SF1 Assign Type MSB ARP SF1 Assign Type LSB	off, Preset 0001 – 7881, User 001 – 256 1st bit6-0 → bit13-7 2nd bit6-0 → bit6-0	MA Power Rock
		47	2	00 – 41 00 – 7F	ARP SF2 Assign Type MSB ARP SF2 Assign Type LSB	:	MB Power Rock
		49	2	00 – 41 00 – 7F	ARP SF3 Assign Type MSB ARP SF3 Assign Type LSB	:	MC Power Rock
		4B	2	00 – 41 00 – 7F	ARP SF4 Assign Type MSB ARP SF4 Assign Type LSB	:	FA Power Rock
		4D	2	00 – 41 00 – 7F	ARP SF5 Assign Type MSB ARP SF5 Assign Type LSB	:	FB Power Rock

TOTAL SIZE = 79 4F (HEX)

Address			Size	Data Range (HEX)	Parameter Name	Description	Notes
46	01	00	2	00 – 7F 00 – 7F	Reverb Type MSB Reverb Type LSB	Refer to "Effect Parameter List."	
		02	1	00 – 7F	Reverb Template Number		
		03	2	00 – 7F 00 – 7F	Reverb Parameter 1 MSB Reverb Parameter 1 LSB	:	
		05	2	00 – 7F 00 – 7F	Reverb Parameter 2 MSB Reverb Parameter 2 LSB	:	
		07	2	00 – 7F 00 – 7F	Reverb Parameter 3 MSB Reverb Parameter 3 LSB	:	
		09	2	00 – 7F 00 – 7F	Reverb Parameter 4 MSB Reverb Parameter 4 LSB	:	
		0B	2	00 – 7F 00 – 7F	Reverb Parameter 5 MSB Reverb Parameter 5 LSB	:	
		0D	2	00 – 7F 00 – 7F	Reverb Parameter 6 MSB Reverb Parameter 6 LSB	:	
		0F	2	00 – 7F 00 – 7F	Reverb Parameter 7 MSB Reverb Parameter 7 LSB	:	
		11	2	00 – 7F 00 – 7F	Reverb Parameter 8 MSB Reverb Parameter 8 LSB	:	
		13	2	00 – 7F 00 – 7F	Reverb Parameter 9 MSB Reverb Parameter 9 LSB	:	
		15	2	00 – 7F 00 – 7F	Reverb Parameter 10 MSB Reverb Parameter 10 LSB	:	
		17	2	00 – 7F 00 – 7F	Reverb Parameter 11 MSB Reverb Parameter 11 LSB	:	
		19	2	00 – 7F 00 – 7F	Reverb Parameter 12 MSB Reverb Parameter 12 LSB	:	
		1B	2	00 – 7F 00 – 7F	Reverb Parameter 13 MSB Reverb Parameter 13 LSB	:	
		1D	2	00 – 7F 00 – 7F	Reverb Parameter 14 MSB Reverb Parameter 14 LSB	:	
		1F	2	00 – 7F 00 – 7F	Reverb Parameter 15 MSB Reverb Parameter 15 LSB	:	
		21	2	00 – 7F 00 – 7F	Reverb Parameter 16 MSB Reverb Parameter 16 LSB	:	
		23	1	00 – 7F	Reverb Return	-∞dB – 0dB – +6dB (0 – 96 – 127)	
		24	1	01 – 7F	Reverb Pan	L63 – C – R63	

TOTAL SIZE = 37 25 (HEX)

Address			Size	Data Range (HEX)	Parameter Name	Description	Notes
46	02	00	2	00 – 7F 00 – 7F	Chorus Type MSB Chorus Type LSB	Refer to "Effect Parameter List."	
		02	1	00 – 7F	Chorus Template Number		
		03	2	00 – 7F 00 – 7F	Chorus Parameter 1 MSB Chorus Parameter 1 LSB	:	
		05	2	00 – 7F 00 – 7F	Chorus Parameter 2 MSB Chorus Parameter 2 LSB	:	
		07	2	00 – 7F 00 – 7F	Chorus Parameter 3 MSB Chorus Parameter 3 LSB	:	
		09	2	00 – 7F 00 – 7F	Chorus Parameter 4 MSB Chorus Parameter 4 LSB	:	
		0B	2	00 – 7F 00 – 7F	Chorus Parameter 5 MSB Chorus Parameter 5 LSB	:	
		0D	2	00 – 7F 00 – 7F	Chorus Parameter 6 MSB Chorus Parameter 6 LSB	:	
		0F	2	00 – 7F 00 – 7F	Chorus Parameter 7 MSB Chorus Parameter 7 LSB	:	
		11	2	00 – 7F 00 – 7F	Chorus Parameter 8 MSB Chorus Parameter 8 LSB	:	
		13	2	00 – 7F 00 – 7F	Chorus Parameter 9 MSB Chorus Parameter 9 LSB	:	
		15	2	00 – 7F 00 – 7F	Chorus Parameter 10 MSB Chorus Parameter 10 LSB	:	
		17	2	00 – 7F 00 – 7F	Chorus Parameter 11 MSB Chorus Parameter 11 LSB	:	
		19	2	00 – 7F 00 – 7F	Chorus Parameter 12 MSB Chorus Parameter 12 LSB	:	
		1B	2	00 – 7F 00 – 7F	Chorus Parameter 13 MSB Chorus Parameter 13 LSB	:	
		1D	2	00 – 7F 00 – 7F	Chorus Parameter 14 MSB Chorus Parameter 14 LSB	:	
		1F	2	00 – 7F 00 – 7F	Chorus Parameter 15 MSB Chorus Parameter 15 LSB	:	
		21	2	00 – 7F 00 – 7F	Chorus Parameter 16 MSB Chorus Parameter 16 LSB	:	
		23	1	00 – 7F	Chorus Return	-∞dB – 0dB – +6dB (0 – 96 – 127)	
		24	1	01 – 7F	Chorus Pan	L63 – C – R63	
		25	1	00 – 7F	Send Chorus To Reverb	-∞dB – 0dB (0 – 127)	

TOTAL SIZE = 38 26 (HEX)

Address			Size	Data Range (HEX)	Parameter Name	Description	Notes
46	03	00	2	00 – 7F 00 – 7F	Insertion-A Type MSB Insertion-A Type LSB	Refer to "Effect Parameter List."	
		02	1	00 – 7F	Insertion-A Template Number		
		03	2	00 – 7F 00 – 7F	Insertion-A Parameter 1 MSB Insertion-A Parameter 1 LSB	:	
		05	2	00 – 7F 00 – 7F	Insertion-A Parameter 2 MSB Insertion-A Parameter 2 LSB	:	
		07	2	00 – 7F 00 – 7F	Insertion-A Parameter 3 MSB Insertion-A Parameter 3 LSB	:	
		09	2	00 – 7F 00 – 7F	Insertion-A Parameter 4 MSB Insertion-A Parameter 4 LSB	:	
		0B	2	00 – 7F 00 – 7F	Insertion-A Parameter 5 MSB Insertion-A Parameter 5 LSB	:	
		0D	2	00 – 7F 00 – 7F	Insertion-A Parameter 6 MSB Insertion-A Parameter 6 LSB	:	
		0F	2	00 – 7F 00 – 7F	Insertion-A Parameter 7 MSB Insertion-A Parameter 7 LSB	:	
		11	2	00 – 7F 00 – 7F	Insertion-A Parameter 8 MSB Insertion-A Parameter 8 LSB	:	
		13	2	00 – 7F 00 – 7F	Insertion-A Parameter 9 MSB Insertion-A Parameter 9 LSB	:	
		15	2	00 – 7F 00 – 7F	Insertion-A Parameter 10 MSB Insertion-A Parameter 10 LSB	:	
		17	2	00 – 7F 00 – 7F	Insertion-A Parameter 11 MSB Insertion-A Parameter 11 LSB	:	
		19	2	00 – 7F 00 – 7F	Insertion-A Parameter 12 MSB Insertion-A Parameter 12 LSB	:	
		1B	2	00 – 7F 00 – 7F	Insertion-A Parameter 13 MSB Insertion-A Parameter 13 LSB	:	
		1D	2	00 – 7F 00 – 7F	Insertion-A Parameter 14 MSB Insertion-A Parameter 14 LSB	:	
		1F	2	00 – 7F 00 – 7F	Insertion-A Parameter 15 MSB Insertion-A Parameter 15 LSB	:	
		21	2	00 – 7F 00 – 7F	Insertion-A Parameter 16 MSB Insertion-A Parameter 16 LSB	:	

TOTAL SIZE = 35 23 (HEX)

Address			Size	Data Range (HEX)	Parameter Name	Description	Notes
46	04	00	2	00 – 7F 00 – 7F	Insertion-B Type MSB Insertion-B Type LSB	Refer to "Effect Parameter List."	
		02	1	00 – 7F	Insertion-B Template Number		
		03	2	00 – 7F 00 – 7F	Insertion-B Parameter 1 MSB Insertion-B Parameter 1 LSB	:	
		05	2	00 – 7F 00 – 7F	Insertion-B Parameter 2 MSB Insertion-B Parameter 2 LSB	:	
		07	2	00 – 7F 00 – 7F	Insertion-B Parameter 3 MSB Insertion-B Parameter 3 LSB	:	
		09	2	00 – 7F 00 – 7F	Insertion-B Parameter 4 MSB Insertion-B Parameter 4 LSB	:	
		0B	2	00 – 7F 00 – 7F	Insertion-B Parameter 5 MSB Insertion-B Parameter 5 LSB	:	
		0D	2	00 – 7F 00 – 7F	Insertion-B Parameter 6 MSB Insertion-B Parameter 6 LSB	:	
		0F	2	00 – 7F 00 – 7F	Insertion-B Parameter 7 MSB Insertion-B Parameter 7 LSB	:	
		11	2	00 – 7F 00 – 7F	Insertion-B Parameter 8 MSB Insertion-B Parameter 8 LSB	:	
		13	2	00 – 7F 00 – 7F	Insertion-B Parameter 9 MSB Insertion-B Parameter 9 LSB	:	
		15	2	00 – 7F 00 – 7F	Insertion-B Parameter 10 MSB Insertion-B Parameter 10 LSB	:	
		17	2	00 – 7F 00 – 7F	Insertion-B Parameter 11 MSB Insertion-B Parameter 11 LSB	:	
		19	2	00 – 7F 00 – 7F	Insertion-B Parameter 12 MSB Insertion-B Parameter 12 LSB	:	
		1B	2	00 – 7F 00 – 7F	Insertion-B Parameter 13 MSB Insertion-B Parameter 13 LSB	:	
		1D	2	00 – 7F 00 – 7F	Insertion-B Parameter 14 MSB Insertion-B Parameter 14 LSB	:	
		1F	2	00 – 7F 00 – 7F	Insertion-B Parameter 15 MSB Insertion-B Parameter 15 LSB	:	
		21	2	00 – 7F 00 – 7F	Insertion-B Parameter 16 MSB Insertion-B Parameter 16 LSB	:	

TOTAL SIZE = 35 23 (HEX)

Address			Size	Data Range (HEX)	Parameter Name	Description	Notes
40	05	00	2	00 – 7F 00 – 7F	Insertion-L Type MSB Insertion-L Type LSB	Refer to "Effect Parameter List."	
		02	1	00 – 7F	Insertion-L Template Number		
		03	2	00 – 7F 00 – 7F	Insertion-L Parameter 1 MSB Insertion-L Parameter 1 LSB	:	
		05	2	00 – 7F 00 – 7F	Insertion-L Parameter 2 MSB Insertion-L Parameter 2 LSB	:	
		07	2	00 – 7F 00 – 7F	Insertion-L Parameter 3 MSB Insertion-L Parameter 3 LSB	:	
		09	2	00 – 7F 00 – 7F	Insertion-L Parameter 4 MSB Insertion-L Parameter 4 LSB	:	
		0B	2	00 – 7F 00 – 7F	Insertion-L Parameter 5 MSB Insertion-L Parameter 5 LSB	:	
		0D	2	00 – 7F 00 – 7F	Insertion-L Parameter 6 MSB Insertion-L Parameter 6 LSB	:	
		0F	2	00 – 7F 00 – 7F	Insertion-L Parameter 7 MSB Insertion-L Parameter 7 LSB	:	
		11	2	00 – 7F 00 – 7F	Insertion-L Parameter 8 MSB Insertion-L Parameter 8 LSB	:	
		13	2	00 – 7F 00 – 7F	Insertion-L Parameter 9 MSB Insertion-L Parameter 9 LSB	:	
		15	2	00 – 7F 00 – 7F	Insertion-L Parameter 10 MSB Insertion-L Parameter 10 LSB	:	
		17	2	00 – 7F 00 – 7F	Insertion-L Parameter 11 MSB Insertion-L Parameter 11 LSB	:	
		19	2	00 – 7F 00 – 7F	Insertion-L Parameter 12 MSB Insertion-L Parameter 12 LSB	:	
		1B	2	00 – 7F 00 – 7F	Insertion-L Parameter 13 MSB Insertion-L Parameter 13 LSB	:	
		1D	2	00 – 7F 00 – 7F	Insertion-L Parameter 14 MSB Insertion-L Parameter 14 LSB	:	
		1F	2	00 – 7F 00 – 7F	Insertion-L Parameter 15 MSB Insertion-L Parameter 15 LSB	:	
		21	2	00 – 7F 00 – 7F	Insertion-L Parameter 16 MSB Insertion-L Parameter 16 LSB	:	
		23	2	00 – 7F 00 – 7F	Insertion-L Parameter 17 MSB Insertion-L Parameter 17 LSB	:	
		25	2	00 – 7F 00 – 7F	Insertion-L Parameter 18 MSB Insertion-L Parameter 18 LSB	:	
		27	2	00 – 7F 00 – 7F	Insertion-L Parameter 19 MSB Insertion-L Parameter 19 LSB	:	
		29	2	00 – 7F 00 – 7F	Insertion-L Parameter 20 MSB Insertion-L Parameter 20 LSB	:	
		2B	2	00 – 7F 00 – 7F	Insertion-L Parameter 21 MSB Insertion-L Parameter 21 LSB	:	
		2D	2	00 – 7F 00 – 7F	Insertion-L Parameter 22 MSB Insertion-L Parameter 22 LSB	:	
		2F	2	00 – 7F 00 – 7F	Insertion-L Parameter 23 MSB Insertion-L Parameter 23 LSB	:	
		31	2	00 – 7F 00 – 7F	Insertion-L Parameter 24 MSB Insertion-L Parameter 24 LSB	:	
		33	2	00 – 7F 00 – 7F	Insertion-L Parameter 25 MSB Insertion-L Parameter 25 LSB	:	
		35	2	00 – 7F 00 – 7F	Insertion-L Parameter 26 MSB Insertion-L Parameter 26 LSB	:	
		37	2	00 – 7F 00 – 7F	Insertion-L Parameter 27 MSB Insertion-L Parameter 27 LSB	:	
		39	2	00 – 7F 00 – 7F	Insertion-L Parameter 28 MSB Insertion-L Parameter 28 LSB	:	
		3B	2	00 – 7F 00 – 7F	Insertion-L Parameter 29 MSB Insertion-L Parameter 29 LSB	:	
		3D	2	00 – 7F 00 – 7F	Insertion-L Parameter 30 MSB Insertion-L Parameter 30 LSB	:	
		3F	2	00 – 7F 00 – 7F	Insertion-L Parameter 31 MSB Insertion-L Parameter 31 LSB	:	
		41	2	00 – 7F 00 – 7F	Insertion-L Parameter 32 MSB Insertion-L Parameter 32 LSB	:	

TOTAL SIZE = 67 43 (HEX)

Address			Size	Data Range (HEX)	Parameter Name	Description	Notes
46	08	00	1	00 – 0E	Controller Set 1 Source	0: PB, 1: MW, 3: AT, 4: FC, 5: FS, 6: RB, 7: BC, 8: AS1, 9: AS2, 12: FC2, 13: AF1, 14: AF2	
		01	2	00 00 – 20, 41 – 43	Controller Set 1 Destination MSB Controller Set 1 Destination LSB	0 – 32, 65 – 67 1st bit6-0 → bit13-7 2nd bit6-0 → bit6-0	
		03	1	00 – 7F	Controller Set 1 Depth	-64 – +63	
		04	1		reserved		
		05	1	00 – 0E	Controller Set 2 Source	0: PB, 1: MW, 3: AT, 4: FC, 5: FS, 6: RB, 7: BC, 8: AS1, 9: AS2, 12: FC2, 13: AF1, 14: AF2	
		06	2	00 00 – 20, 41 – 43	Controller Set 2 Destination MSB Controller Set 2 Destination LSB	0 – 32, 65 – 67 1st bit6-0 → bit13-7 2nd bit6-0 → bit6-0	
		08	1	00 – 7F	Controller Set 2 Depth	-64 – +63	
		09	1		reserved		
		0A	1	00 – 0E	Controller Set 3 Source	0: PB, 1: MW, 3: AT, 4: FC, 5: FS, 6: RB, 7: BC, 8: AS1, 9: AS2, 12: FC2, 13: AF1, 14: AF2	
		0B	2	00 00 – 20, 41 – 43	Controller Set 3 Destination MSB Controller Set 3 Destination LSB	0 – 32, 65 – 67 1st bit6-0 → bit13-7 2nd bit6-0 → bit6-0	
		0D	1	00 – 7F	Controller Set 3 Depth	-64 – +63	
		0E	1		reserved		
		0F	1	00 – 0E	Controller Set 4 Source	0: PB, 1: MW, 3: AT, 4: FC, 5: FS, 6: RB, 7: BC, 8: AS1, 9: AS2, 12: FC2, 13: AF1, 14: AF2	
		10	2	00 00 – 20, 41 – 43	Controller Set 4 Destination MSB Controller Set 4 Destination LSB	0 – 32, 65 – 67 1st bit6-0 → bit13-7 2nd bit6-0 → bit6-0	
		12	1	00 – 7F	Controller Set 4 Depth	-64 – +63	
		13	1		reserved		
		14	1	00 – 0E	Controller Set 5 Source	0: PB, 1: MW, 3: AT, 4: FC, 5: FS, 6: RB, 7: BC, 8: AS1, 9: AS2, 12: FC2, 13: AF1, 14: AF2	

Address			Size	Data Range (HEX)	Parameter Name	Description	Notes
		15	2	00 00 – 20, 41 – 43	Controller Set 5 Destination MSB Controller Set 5 Destination LSB	0 – 32, 65 – 67 1st bit6-0 → bit13-7 2nd bit6-0 → bit6-0	
		17	1	00 – 7F	Controller Set 5 Depth	-64 – +63	
		18	1		reserved		
		19	1	00 – 0E	Controller Set 6 Source	0: PB, 1: MW, 3: AT, 4: FC, 5: FS, 6: RB, 7: BC, 8: AS1, 9: AS2, 12: FC2, 13: AF1, 14: AF2	
		1A	2	00 00 – 20, 41 – 43	Controller Set 6 Destination MSB Controller Set 6 Destination LSB	0 – 32, 65 – 67 1st bit6-0 → bit13-7 2nd bit6-0 → bit6-0	
		1C	1	00 – 7F	Controller Set 6 Depth	-64 – +63	
		1D	1		reserved		

TOTAL SIZE = 30 1E (HEX)

MIDI PARAMETER CHANGE TABLE (DRUM VOICE KEY)

Address			Size	Data Range (HEX)	Parameter Name	Description	Notes
47	ee	00	1	00 – 01	Element Assign	off, on	
		01	1	00 – 03	Wave Type	0=PRE, 1=USR, 2=FL1, 3=FL2	
		02	1		reserved		
		03	1	00 – 01	Receive Note Off	off, on	
		04	1	00 – 01	Key Assign Mode	0=single, 1=multi	
		05	1	00 – 7F	Alternate Group	0: off, 1 – 127	
		06	2	00 – 1F 00 – 7F	Wave Number MSB Wave Number LSB	1 – 3977 (USR: 1 – 128, FL1/FL2: 1 – 2048) 1st bit 6-0 → bit 13-7 2nd bit 6-0 → bit 6-0	
		08	1	01 – 7F	Pan	L63 – C – R63	
		09	1	00 – 7F	Random Pan Depth	0 – 127	
		0A	1	00 – 7F	Alternate Pan Depth	L64 – 0 – R63	
		0B	1	00 – 7F	Reverb Send Level	0 – 127	
		0C	1	00 – 7F	Chorus Send Level	0 – 127	
		0D	1		reserved		
		0E	1	00 – 02	Insertion Effect Switch	thru, insA, insB	
		0F	1	00 – 4F	Output Select	0: L&R, 8: asnL&R, 9-15: FW1&2 ... FW13&14, 64-79: asnL, asnR, FW1 ... FW14	
		10	1	00 – 7F	Element Level	0 – 127	
		11	1	00 – 7F	Level Velocity Sensitivity	-64 – +63	
		12	1		reserved		
		13	1	00 – 7F	AEG Attack Time	0 – 127	
		14	1	00 – 7F	AEG Decay 1 Time	0 – 127	
		15	1	00 – 7F	AEG Decay 2 Time	0 – 126, hold	
		16	1		reserved		
		17	1		reserved		
		18	1		reserved		
		19	1	00 – 7F	AEG Decay 1 Level	0 – 127	
		1A	1		reserved		
		1B	1		reserved		
		1C	1	10 – 70	Coarse Tune	-48 – +48	
		1D	1	00 – 7F	Fine Tune	-64 – +63	
		1E	1	00 – 7F	Pitch Velocity Sensitivity	-64 – +63	
		1F	1		reserved		
		20	2	00 – 01 00 – 7F	LPF Cutoff Frequency MSB LPF Cutoff Frequency LSB	0 – 255 1st bit6-0 → bit13-7 2nd bit6-0 → bit6-0	
		22	1	00 – 7F	LPF Cutoff Velocity Sensitivity	-64 – +63	
		23	1	00 – 7F	LPF Resonance	0 – 127	
		24	1		reserved		
		25	2	00 – 01 00 – 7F	HPF Cutoff Frequency MSB HPF Cutoff Frequency LSB	0 – 255 1st bit6-0 → bit13-7 2nd bit6-0 → bit6-0	
		27	1	00 – 05	EQ Type	2 Band, P.EQ, Boost6, Boost12, Boost18, thru	
		28	1	00 – 1F	EQ Q	0 – 31 (0.7 – 10.3)	
		29	2	00 – 01 00 – 7F	EQ 1 Frequency MSB EQ 1 Frequency LSB	50.1 – 2.00k (2 Band) 139.7 – 10.1k (P.EQ) 1st bit6-0 → bit13-7 2nd bit6-0 → bit6-0	
		2B	1	20 – 60	EQ 1 Gain	-32 – +32 (-12.00dB – +12.00dB)	
		2C	2	01 03 – 71	EQ 2 Frequency MSB EQ 2 Frequency LSB	503.8 – 14.0k 1st bit6-0 → bit13-7 2nd bit6-0 → bit6-0	
		2E	1	20 – 60	EQ 2 Gain	-32 – +32 (-12.00dB – +12.00dB)	

TOTAL SIZE = 47 2F (HEX)

ee = Element Number (00h – 48h: C0 – C6)

YAMAHA [Music Production Synthesizer - synthesizer part] Date :08-MAR-2010
Model MOTIF XF6/7/8 MIDI Implementation Chart Version : 1.0

Function...		Transmitted	Recognized	Remarks
Basic Channel	Default	1 - 16	1 - 16	Memorized
	Changed	1 - 16	1 - 16	
Mode	Default	3	1 - 4(m=1) *2	Memorized
	Messages	X	1 - 4(m=1) *2	
	Altered	**********	X	
Note Number : True voice		0 - 127 **********	0 - 127 0 - 127	
Velocity	Note ON	O 9nH,v=1-127	O 9nH,v=1-127	
	Note OFF	X 9nH,v=0	X	
After Touch	Key's	X	X	
	Ch's	O	O *1	
Pitch Bend		O	O *1	
Control Change	0,32	O *1	O *1	Bank Select
	1,11	O	O *1	
	5	X	O *1	Portamento Time
	7,10	O	O *1	
	6,38	X	O *1	Data Entry
	64	O	O *1	Sustain Sw
	65	X	O *1	Portamento Sw
	66	X	O *1	Sostenuto
	71-75	O	O *1	Sound Controller
	91,93	O	O *1	Effect Depth
	96-97	X	O *1	RPN Inc,Dec
	100-101	X	O *1	RPN LSB,MSB
	1-31,33-95	O	O *1	Assignable Cntrl
Prog Change : True #		O 0 - 127 *1 **********	O 0 - 127 *1 0 - 127 *1	
System Exclusive		O	O	
Common	: Song Pos.	X	X	
	: Song Sel.	X	X	
	: Tune	X	X	
System Real Time	: Clock	X	O *3	
	: Commands	X	X	
Aux Mes-sages	: All Sound Off	X	O (120,126,127)	
	: Reset All Cntrls	X	O (121)	
	: Local ON/OFF	X	X	
	: All Notes OFF	X	O (123-125)	
	: Active Sense	O	O	
	: Reset	X	X	

Notes:
*1 Only when the MIDI Switch parameter is set to "on."
*2 When the Mode 4 message is received, "m" is fixed to "1" regardless of the 3rd byte value.
*3 Only when the MIDI Sync parameter is set to "MIDI" or "auto."

Mode 1 : OMNI ON , POLY Mode 2 : OMNI ON ,MONO O : Yes
Mode 3 : OMNI OFF, POLY Mode 4 : OMNI OFF,MONO X : No

YAMAHA [Music Production Synthesizer - sequencer part] Date :08-MAR-2010
Model MOTIF XF6/7/8 MIDI Implementation Chart Version : 1.0

Function...		Transmitted	Recognized	Remarks
Basic Channel	Default Changed	1 - 16 X	1 - 16 X	Memorized
Mode	Default Messages Altered	X X **********	X X X	
Note Number : True voice		0 - 127 **********	0 - 127 0 - 127	
Velocity	Note ON Note OFF	O 9nH,v=1-127 X 9nH,v=0	O 9nH,v=1-127 X	
After Touch	Key's Ch's	O O	O O	
Pitch Bend		O	O	
Control Change	0-121	O	O	
Prog Change : True #		O 0 - 127 **********	O 0 - 127	
System Exclusive		O	O	
Common	: Song Pos. : Song Sel. : Tune	O *2 O *2 X	O *1 O *1 X	
System Real Time	: Clock : Commands	O *2 O *2	O *3 O *1	
Aux Mes-sages	: All Sound Off : Reset All Cntrls : Local ON/OFF : All Notes OFF : Active Sense : Reset	O O O O X X	O O O O X X	

Notes:
*1 Only when the Sequencer Control parameter is set to "in/out."
*2 Only when the MIDI Clock Out parameter is set to "on."
*3 Only when the MIDI Sync parameter is set to "MIDI" or "auto." When the MIDI Sync parameter is set to "MTC," MMC messages (stop, deferred play, locate) will be transmitted and MTC (MIDI Time Code) will be recognized.

Mode 1 : OMNI ON , POLY Mode 2 : OMNI ON ,MONO O : Yes
Mode 3 : OMNI OFF, POLY Mode 4 : OMNI OFF,MONO X : No

Remote Control Assignments

For a general overview of the remote control functions of the MOTIF XF, see pages 61 – 63 of the Owner's Manual.

Functions common to all DAW Software

[SEQ TRANSPORT] button

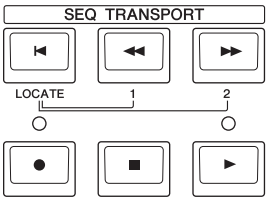

Buttons	Functions
[⏮]	Returns the song to the beginning.
[◀◀]	Rewind
[▶▶]	Fast-forward
[■]	Press to stop recording or playback.
[▶]	Press to start playback from the current point.
[●]	Press this to start song recording. The [▶] (Play) and [●] (Record) lamp are turned on during recording.

In addition to the buttons/functions listed above, the following buttons are used to perform the functions listed below for each respective DAW software.

Cubase 5

Buttons	Functions
[F6] Shift + [◀◀]	Move the song position to the top of the song.
[F6] Shift + [▶▶]	Move the song position to the end of the song.

LogicStudio

Buttons	Functions
[◀◀]	When the Marker is turned on, this operation moves the song position to the previous Marker. When Nudge is turned on, this operation moves the current object to the left side.
[▶▶]	When the Marker is turned on, this operation moves the song position to the next Marker. When Nudge is turned on, this operation moves the current object to the right side.

SONAR 8

Buttons	Functions
[◀◀]	When the Marker is turned on, this operation moves the song position to the previous Marker.
[F6] M1 + [◀◀]	Moves the song position to the top of the song. When the Marker is turned on, this operation opens the window for entering the Marker.
[▶▶]	When the Marker is turned on, this operation moves the song position to the next Marker.
[F6] M1 + [▶▶]	Moves the song position to the end of the song. When the Marker is turned on, this operation opens the window for entering the Marker.

Digital Performer 6

Buttons	Functions
[◀◀]	Turns rewind fast or slow.
[▶▶]	Turns fast-forward fast or slow.

Data dial, [DEC/NO]/[INC/YES] buttons

Moves the current location of song playback.
You can switch the Song Location function and the Edit Parameter function by pressing the [SF4] button, when "Dial" is shown on the tab corresponding to the [SF4] button.
Even if the Edit Parameter function is selected, only the Song Location function is available when no channels are selected, regardless of whether "Dial" is shown on the tab corresponding to the [SF4] button.
Also, if you turn the knobs, the Data dial function is automatically changed to the Edit Parameter function, letting you change the parameter value of the knob channel.

Control knobs

The functions assigned to the parameters on the DAW software are controlled by the knobs on the MOTIF XF panel.
Pressing the [F4] ◀ Bank/[F5] Bank ▶ buttons switches the channels being controlled on the MOTIF XF in groups of eight channels.

Control sliders

The functions assigned to the sliders on the DAW software are controlled by the slider on the MOTIF XF panel.
Pressing the [F4] ◀ Bank/[F5] Bank ▶ buttons switches the channels being controlled on the MOTIF XF in groups of eight channels.
You can hold down the [MASTER EFFECT] button on the MOTIF XF panel and use the sliders, and then control the Master Volume.

Cursor buttons

[<]/ [>] buttons

By moving the cursor in the LCD of the MOTIF XF, you can select the channel for editing.

[∧]/[∨] buttons

- When controlling Cubase 5
  Moves the cursor up or down in the DAW software.
- When controlling any other software than Cubase 5
  The functions assigned to these buttons differ depending on the DAW software. These buttons are assigned to the functions of the cursor up/down buttons in the Mackie Control and Logic Control when using the relevant DAW software.

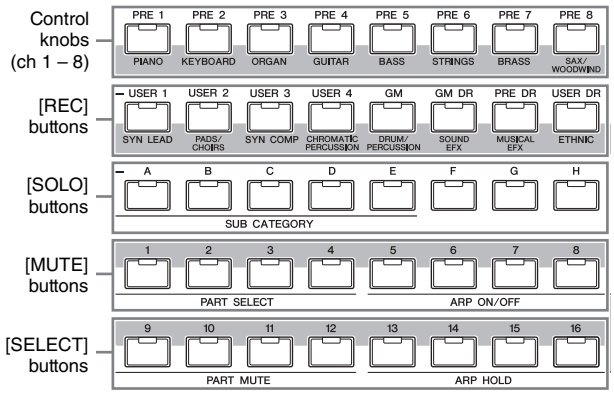

Bank buttons [PRE 1] – [PRE 8]

Pressing the [PRE 1] – [PRE 8] buttons has the same function as pressing the [ENTER] button when the cursor is on any channel. Pressing the [F4] ◀ Bank/[F5] Bank ▶ buttons switches the channels being controlled on the MOTIF XF in groups of eight channels.

Bank buttons [USER 1] – [USER DR]

These function as the [REC 1] – [REC 8] buttons, and switch the recording on/off for the corresponding channel. Pressing the [F4] ◀ Bank/[F5] Bank ▶ buttons switches the channels being controlled on the MOTIF XF in groups of eight channels.

Group buttons [A] – [H]

These function as the [SOLO 1] – [SOLO 8] buttons, and switch the Solo on/off for the corresponding channel. Pressing the [F4] ◀ Bank/[F5] Bank ▶ buttons switches the channels being controlled on the MOTIF XF in groups of eight channels.

Number buttons [1] – [8]

These function as the [MUTE 1] – [MUTE 8] buttons, and switch the Mute on/off for the corresponding channel. Pressing the [F4] ◀ Bank/[F5] Bank ▶ buttons switches the channels being controlled on the MOTIF XF in groups of eight channels.

Number buttons [9] – [16]

These function as the [SELECT 1] – [SELECT 8] buttons, and select the corresponding channel. Pressing the [F4] ◀ Bank/[F5] Bank ▶ buttons switches the channels being controlled on the MOTIF XF in groups of eight channels.

NOTE When using Digital Performer, you can select multiple channels on the LCD of the MOTIF XF by holding down the [F6] Shift button and pressing the appropriate number buttons.

Function/Sub Function buttons
Knobs 1 – 8

Concerning the Function buttons [F1] – [F6], the Sub Function buttons [SF1] – [SF6], and the Knobs 1 – 8: the Control functions differ depending on the software you use.

[EFFECT BYPASS INSERTION] button

Switches the display format for the location on the DAW software SMPTE (absolute time) or Beats (Meas, Beat, Clock).

The software functions for each DAW are explained in the next section.

Functions for each DAW software

■ When controlling Cubase 5

A specific function has been assigned to each page. Use the [SELECTED PART CONTROL] and [MULTI PART CONTROL] button to select the desired page.

Fader Set page

Flip	Pan	Name/Val	Dial	Page List	
Project	Mixer	Edit	◀ Bank	Bank ▶	Shift

Buttons	Functions
[F1] Project	Brings the Track View window of active project to the top of the stack.
[F2] Mixer	Starts the Mixer window, brings it to the front of the computer screen, or closes the window.
[F3] Edit	Opens or closes the Edit window of the selected block (Audio/MIDI). If you hold down this button for a few seconds, the window remains open while you continue holding down this button.
[F4] ◀ Bank [F5] Bank ▶	Scrolls through the channel indication on the LCD of the MOTIF XF every eight channels.
[SF1] Flip	Exchanges the functions between the Channel Knobs and the Faders.
[SF3] Name/Val	Changes the indication of the parameter name and its value.

● PAN mode

Buttons/Knobs		Functions
[SF2] Pan		Assigns the parameters of the each channel's pan to the knobs on the MOTIF XF. This operation is shown in the Mixer window.
	Knobs 1 – 8	Edits each of the parameters.

Selected Ch (Selected Channel) page

EQ	Inserts	Ch Sends	Dial	Page List	
Page ▼	Page ▲	Edit	◀ Bank	Bank ▶	Shift

Buttons	Functions
[F1] Page ▲ [F2] Page ▼	Calls up the next/previous page.
[F6] Shift + [F1] Page ▲	Calls up the first page.
[F6] Shift + [F2] Page ▼	Calls up the last page.
[F4] ◀ Bank [F5] Bank ▶	Scrolls through the track indication on the LCD of the MOTIF XF every eight channels.

● EQ mode (Audio track and Instrument track only)

Buttons/Knobs		Functions
[SF1] EQ		Assigns a four-band EQ parameter in the selected channel to a knob on the MOTIF XF. This operation is shown in the EQ section in the DAW Project window.
	Knobs 1 – 8	Edits each of the parameters.

- **INSERTS mode**

Buttons	Functions
[SF2] Inserts	Assigns the settings related to the Inserted Effect in the selected channel to the knobs on the MOTIF XF. This operation is shown in the Insert windows differently according to Effect type. The Insert windows can be displayed by selecting the Effect types in the Insert section in the DAW Project window.

Page 1 only

Knobs	Functions
Knob 1	Changes the Slot Number.
Knob 2	Turns the Effects assigned to the selected Slot on or off. However, this function may not be available, depending on the effect type.
Knob 3	Selects an Effect Type assigned to the selected Slot.

Page 2 or later

Knobs	Functions
Knobs 1 – 8	Edits each of the selected Effect parameters.

- **CH SEND mode**

Buttons/Knobs	Functions
[SF3] CH Sends	Assigns a Effect Send parameter in the selected channel to a knob on the MOTIF XF. This operation is shown in the Send section in the DAW Project window.
Knobs 1 – 8	Edits each of the parameters.

Global page

Inst	MasterFx	Send Fx	Dial	Page List	
Project	Mixer	Edit	◀ Bank	Bank ▶	Shift

- **INSTRUMENT mode**

Buttons	Functions
[SF1] Inst	Assigns the settings related to the VST Instrument to the knobs on the MOTIF XF.

Page 1 only

Knobs	Functions
Knob 1	Changes the Slot Number.
Knob 2	Turns the software tone generator assigned to the selected Slot on or off.

Page 2 or later

Knobs	Functions
Knobs 1 – 8	Edits each of the selected VST Instrument parameters.

- **MASTER FX mode**

Buttons	Functions
[SF2] Master FX	Assigns the settings related to the Master Effect to the knobs on the MOTIF XF.

Page 1 only

Knobs	Functions
Knob 1	Changes the Slot Number.
Knob 2	Turns the Effects assigned to the selected Slot on or off.

Page 2 or later

Knobs	Functions
Knobs 1 – 8	Edits each of the selected Effect parameters.

- **SEND FX mode**

Buttons	Functions
[SF3] Send FX	Assigns the settings related to the Send Effect to the knobs on the MOTIF XF.

Page 1 only

Knobs	Functions
Knob 1	Changes the Slot Number.
Knob 2	Turns the Effects assigned to the selected Slot on or off.

Page 2 or later

Knobs	Functions
Knobs 1 – 8	Edits each of the selected Effect parameters.

Locate page

Cycle	Punch	◀	▶	Page List	
Project	Mixer	Add Mark	Previous	Next	Shift

Buttons	Functions
[F3] Add Mark	Enters a Marker at the current song position.
[F4] Previous	Moves the song position to the previous Marker.
[F5] Next	Moves the song position to the next Marker.
[SF1] Cycle	Turns Loop on or off.
[SF2] Punch	Turns Punch In on or off.
[SF3] ◀ [SF4] ▶	Moves the song position to the left and right Locator.
[F6] Shift + [SF3] ◀ [F6] Shift + [SF4] ▶	Set the current position to the left and right Locator.

Function page

F5	F6	F7	F8	Page List	
F1	F2	F3	F4	–	Shift

Buttons	Functions
[F1] F1 – [F4] F4 [SF1] F5 [SF2] F6 [SF3] F7 [SF4] F8	Defined in Cubase.

Fader Group page

5	6	7	8	Page List	
1	2	3	4	–	Shift

Buttons	Functions
[F1] F1 – [F4] F4 [SF1] F5 – [SF4] F8	Corresponds to 1 – 8 of the Channel View on the Mixer window.

Project page

Save	Revert	Undo	Redo	Page List	
Project	Mixer	Edit	◀ Bank	Bank ▶	Shift

Buttons	Functions
[SF1] Save	Executes the Save operation.
[SF2] Revert	Reverts to the status they had when the data was saved last.
[SF3] Undo	Executes the Undo operation.
[SF4] Redo	Executes the Redo operation.

Preference page

SoloDef	◀ Channel	Channel ▶	Dial	Page List	
Project	Mixer	Edit	◀ Bank	Bank ▶	Shift

Buttons	Functions
[SF1] SoloDef	Sets Solo for all channels to off.
[F6] Shift + [SF1] SoloDef	Unmutes all channels.
[SF2] ◀ Channel [SF3] Channel ▶	Scrolls through the channel indication on the LCD of the MOTIF XF channel-by-channel.

Common Functions in all pages

Buttons	Functions
[F6] Shift + [EFFECT ON/OFF INSERTION]	Alternately hides/shows the Level Meter.

NOTE Parameters to be edited differ depending on the assigned Effect and Software Tone Generator.

NOTE Additional operations other than those listed above are available. For details, refer to the relevant documentation of DAW remote control you are using.

■ When controlling LogicStudio

A specific function has been assigned to each page. Use the [SELECTED PART CONTROL] and [MULTI PART CONTROL] button to select the desired page.

Assignment page

Send	Plug-ins	Inst	Dial	Page List	
Track	Pan/Srnd	EQ	◀ Bank	Bank ▶	Shift

Buttons	Functions
[F4] ◀ Bank [F5] Bank ▶	Scrolls through the track indication on the LCD of the MOTIF XF every eight channels.

● SEND mode

Buttons/Knobs	Functions
[SF1] Send (Multi Channel View) [SF1] Send → [SF1] Send (Track Parameter View)	Assigns the settings related to the Send Effect to the knobs on the MOTIF XF. This applies to the two View types listed at left.
Cursor buttons [∧]/[∨] (Multi Channel View)	Changes the Slot Number.
Knobs 1 – 8 → [ENTER]	Edits each of the parameters. When setting the Send destination, turn the knob to select it (indication flashes), then press the [ENTER] button to actually enter the selected setting.
[ENTER] (with the cursor on any channel; when the edit parameter is Send Level)	Resets the parameter value to the default.
[ENTER] (with the cursor on any channel; when the edit parameter is PRE/POST or Mute)	Changes the setup.
Call up the Cursor page, then press the [SF1] ◀/[SF2] ▶ (Multi Channel View)	Changes the parameter to be edited.
Call up the Cursor page, then press the [SF1] ◀/[SF2] ▶ (Track Parameter View)	Switches between SEND 1/2 and SEND 3/4.

● PLUG-INS mode

Buttons/Knobs	Functions
[SF2] Plug-ins (Multi Channel View) [SF2] Plug-ins → [SF2] Plug-ins (Track Parameter View)	Assigns the settings related to the Inserted Effect to the knobs on the MOTIF XF. That is enabled in two View types described at left.
Cursor buttons [∧]/[∨] (Multi Channel View)	Changes the Slot Number.
Knobs 1 – 8 → [ENTER]	Turn the knob to select the desired Plug-in for insertion (indication flashes), then press the [ENTER] button to actually enter the selected setting.
[ENTER] (with the cursor on any channel to which the Plug-in is assigned.)	Calls up the parameter page and opens the Editor window on Logic.
Knobs 1 – 8 (Parameter page)	Edits each of the parameters.
[ENTER] (with the cursor on any channel.) (Parameter page)	Resets the parameter value to the default. (Some parameters cannot be reset.)
Call up the Cursor page, then press the [SF1] ◀/[SF2] ▶ (Parameter page)	Changes the page.
[SF2] Plug-ins	Return to the PLUG-INS mode.

● INSTRUMENT mode

Buttons/Knobs	Functions
[SF3] Inst (Multi Channel View) [SF3] Inst → [SF3] Inst (Track Parameter View)	Assigns the settings related to the VST Instrument to the knobs on the MOTIF XF. That is enabled in two View types described at left.
Knobs 1 – 8 → [ENTER]	Turn the knob to select the desired instrument for insertion (indication flashes), then press the [ENTER] button to actually enter the selected setting.
[ENTER] (with the cursor on any channel to which the instrument is assigned.)	Calls up the parameter page and opens the Editor window on Logic.
Knobs 1 – 8 (Parameter page)	Edits each of the parameters.
[ENTER] (with the cursor on any channel.) (Parameter page)	Resets the parameter value to the default. (Some parameters cannot be reset.)
Call up the Cursor page, then press the [SF1] ◀/[SF2] ▶ (Parameter page)	Changes the page.
[SF3] Inst	Return to the INSTRUMENT mode.

● PAN mode

Buttons/Knobs	Functions
[F2] Pan/Srnd (Multi Channel View) [F2] Pan/Srnd → [F2] Pan/Srnd (Track Parameter View about Pan/Surround)	Assigns the parameters of the each channel's pan to the knobs on the MOTIF XF. That is enabled in two View types described at left.
Knobs 1 – 8	Edits each of the parameters.
[ENTER] (with the cursor on any channel.)	Resets the parameter value to the default.

Fader Banks page

Flip	–	Name/Val	Dial	Page List	
◀ Channel	Channel ▶	–	◀ Bank	Bank ▶	Shift

Buttons	Functions
[F1] ◀ Channel [F2] Channel ▶	Scrolls through the track indication on the LCD of the MOTIF XF channel-by-channel.
[F4] ◀ Bank [F5] Bank ▶	Scrolls through the track indication on the LCD of the MOTIF XF every eight channels.
[SF1] Flip	Assigns the function of the Channel Knob to the Fader.
[F6] Shift + [SF1] Flip	Exchanges the functions between the Channel Knobs and the Faders.
[SF3] Name/Val	Changes the indication of the parameter name and its value.
[F6] Shift + [SF3] Name/Val	Changes the Level Meter display mode.

Global View page

Aux	Busses	Outputs	User	Page List	
MIDI TR	Inputs	Audio TR	Audio Inst	GlobalView	Shift

Buttons	Functions
[F1] MIDI TR	Makes the Global View mode active and displays the MIDI track with the Multi Channel View.
[F2] Inputs	Makes the Global View mode active and displays the AUDIO INPUT object with the Multi Channel View.
[F3] Audio TR	Makes the Global View mode active and displays the Audio track with the Multi Channel View.
[F4] Audio Inst	Makes the Global View mode active and displays the Audio Instrument track with the Multi Channel View.
[F5] Global View	Switches between the Global view mode and Track View mode.
[SF1] Aux	Makes the Global View mode active and displays the AUX object with the Multi Channel View.
[SF2] Busses	Makes the Global View mode active and displays the BUS object with the Multi Channel View.
[SF3] Outputs	Makes the Global View mode active and displays the AUDIO OUTPUT object with the Multi Channel View.
[SF4] User	Selects all eight tracks in the DAW Software.
[F6] Shift + [SF4] User	Scrolls through the track indication.

Utilities page

Save	Undo	Name/Val	Dial	Page List	
Cancel	Enter	–	◀ Bank	Bank ▶	Shift

Buttons	Functions
[F4] ◀ Bank [F5] Bank ▶	Scrolls through the track indication on the LCD of the MOTIF XF every eight channels.
[SF1] Save	Executes the Save operation.
[SF2] Undo	Executes the Undo operation.
[F6] Shift + [SF2] Undo	Executes the Redo operation.

Function page

F5	F6	F7	F8	Page List	
F1	F2	F3	F4	–	Shift

Buttons	Functions
[F1] F1 – [F4] F4 [SF1] F5 [SF2] F6 [SF3] F7	Calls up Screen Sets 1 – 7.
[SF4] F8	Closes the window located at the front of the computer or floating window.

On/Off page

Nudge	Drop	Click	Dial	Page List	
Marker	Cycle	Replace	Solo	–	Shift

Buttons	Functions
[F1] Marker	Turns the Marker on or off.
[F6] Shift + [F1] Marker	Enters the Marker Option mode.
[F2] Cycle	Turns Loop on or off.
[F6] Shift + [F2] Cycle	Enters the Cycle Option mode.
[F3] Replace	Turns the Replace Record on or off.
[F4] Solo	Turns Solo on or off.
[SF1] Nudge	Turns Nudge on or off.
[F6] Shift + [SF1] Nudge	Enters the Nudge Option mode.
[SF2] Drop	Turns Drop (Punch In/Out Record) on or off.
[SF3] Click	Turns Click on or off.

Cursor page

◀	▶	Scrub	Dial	Page List	
▼	▲	Zoom	◀ Bank	Bank ▶	Shift

Buttons	Functions
Cursor buttons [F1] ▲/[F2] ▼/[SF1] ◀/[SF2] ▶	Moves the cursor in the LCD of the MOTIF XF.
[F3] Zoom	Turns Zoom on or off.
[F4] ◀ Bank [F5] Bank ▶	Scrolls through the track indication on the LCD of the MOTIF XF every eight channels.
[SF3] Scrub	Turns Scrub on or off. When Scrub is on, the dial can be used for Scrub playback. When Scrub is off, the dial is used to move the song position.

NOTE Additional operations other than those listed above are available. For details, refer to the relevant documentation of DAW remote control you are using.

■ When controlling SONAR 8

A specific function has been assigned to each page. Use the [SELECTED PART CONTROL] and [MULTI PART CONTROL] button to select the desired page.

Assignment page

Sends	Plug-ins	Dyn	Dial	Page List	
Tracks	Pan	EQ	◀ Bank	Bank ▶	M1

Buttons	Functions
[F4] ◀ Bank [F5] Bank ▶	Scrolls through the track indication on the LCD of the MOTIF XF every eight channels.

● TRACK mode

Buttons/Knobs	Functions
[F1] Tracks (Track Parameter mode) [F1] Tracks → [F1] Tracks (Selected Channel mode)	Assigns the Track settings to the knobs on the MOTIF XF. This applies to the two DAW mode types listed at left.
Knobs 1 – 8	Edits each of the parameters.
[ENTER] (with the cursor on any channel.)*	Resets the parameter value to the default.

● PAN mode

Buttons/Knobs	Functions
[F2] Pan [F2] Pan → [F2] Pan (Selected Channel mode about Pan/Surround)	Assigns the parameters of each channel's pan to the knobs on the MOTIF XF.
Knobs 1 – 8	Edits each of the parameters.
[ENTER] (with the cursor on any channel.)*	Resets the parameter value to the default.

● EQ Edit

Buttons/Knobs/Faders	Functions
[F3] EQ [F3] EQ → [F3] EQ (Selected Channel mode) [F3] EQ (Band mode) (with Selected Channel mode)	Assigns EQ-related settings of the selected channel to the knobs and faders on the MOTIF XF.
Call up the Fader Banks page, then press the [F6] M1 +[F1] ◀ Channel/[F2] Channel ▶	Changes the Plug-in number when the [EDIT] is turned on.
Knobs 1 – 8 (Band mode)	For editing each frequency band.
Fader 1 – 8 (Band mode)	For editing the Q (bandwidth) of each frequency band.

● SEND mode

Buttons/Knobs	Functions
[SF1] Sends [SF1] Sends → [SF1] Sends (Selected Channel mode)	Assigns the settings related to the Send Effect to the knobs on the MOTIF XF.
Knobs 1 – 8	Edits each of the parameters.
[ENTER] (with the cursor on any channel.)*	Resets the parameter value to the default.

● PLUG-INS mode

Buttons/Knobs	Functions
[SF2] Plug-ins [SF2] Plug-ins → [SF2] Plug-ins (Selected Channel mode)	Assigns the settings related to the Inserted Effect to the knobs on the MOTIF XF.
Knobs 1 – 8	Edits each of the parameters.
[ENTER] (with the cursor on any channel.)*	Resets the parameter value to the default.
Call up the Fader Banks page, then press the [F1] ◀ Channel/ [SF2] Channel ▶	Changes the Plug-in number when the [EDIT] is turned on.

● DYNAMICS Edit

Buttons/Knobs	Functions
[SF3] Dyn	Assigns the settings related to Dynamics to the knobs on the MOTIF XF.
Knobs 1 – 8	Edits each of the parameters.
[ENTER] (with the cursor on any channel.)*	Resets the parameter value to the default.

* Pressing the [PRE 1] – [PRE 8] buttons has the same function as pressing the [ENTER] button when the cursor is located at channels 1 – 8 on the LCD of the MOTIF XF.

Fader Banks page

Flip	Edit	Name/Val	Dial	Page List	
◀ Channel	Channel ▶	–	◀ Bank	Bank ▶	M1

Buttons	Functions
[F1] ◀ Channel [F2] Channel ▶ (Multi Channel)	Changes a parameter to be edited via a Knob in order one by one when [EDIT] is turned on.
[F4] ◀ Bank [F5] Bank ▶ (Multi Channel)	Changes the parameters to be edited via a Knobs in groups of eight when [EDIT] is turned on.
[F1] ◀ Channel [F2] Channel ▶ (Selected Channel)	Changes an indicated parameter in order one by one when [EDIT] is turned on.
[F4] ◀ Bank [F5] Bank ▶ (Selected Channel)	Changes the indicated parameters in groups of eight when [EDIT] is turned on.
[SF1] Flip	Assigns the function of the Channel Knobs to the Faders.
[SF1] Flip → [SF1] Flip	Exchanges the functions between the Channel Knobs and the Faders.
[SF2] Edit	Assigns a parameter to a Knobs by using the [F1] ◀ Channel/[F2] Channel ▶ and [F4] ◀ Bank/[F5] Bank ▶ buttons.
[SF3] Name/Val	Changes the indication of the parameter name and its value.
[EDIT] M2 + [SF3] Name/ Val	Turns the Level Meter indication on or off. However, pressing these buttons moves through the statuses in succession (on, off, off).

Window page

OK/Enter	Cancel	Next Win	Close Win	Page List	
New Audio	New MIDI	Fit Track	Fit Prjct	–	M1

Buttons	Functions
[F1] New Audio	Creates a new Audio track at the end of the song.
[F2] New MIDI	Creates a new MIDI track at the end of the song.
[F3] Fit Track	Adjusts the size of all track indications to the Track window, and displays the top track at the top line.
[F4] Fit Prjct	In addition to Fit Track function, this adjusts the display in the time axis.
[SF3] Next Win	Moves the next window to the front of the screen.
[SF4] Close Win	Closes the current window.

Undo/Redo page

Track	Aux	Main	Dial	Page List	
Save	Undo	Redo	◀ Bank	Bank ▶	M1

Buttons	Functions
[F1] Save	Executes the Save operation.
[F2] Undo	Executes the Undo operation.
[F3] Redo	Executes the Redo operation.
[F4] ◀ Bank [F5] Bank ▶	Scrolls through the track indication on the LCD of the MOTIF XF every eight channels.
[SF1] Track	Assigns a Track to a Fader.
[SF2] Aux	Assigns an AUX BUS to a Fader.
[SF3] Main	Assigns output level adjustment of the Virtual Main Bus to the Faders.

Function page

F5	F6	F7	F8	Page List	
F1	F2	F3	F4	–	M1

Buttons	Functions
[F1] F1 – [F4] F4 [SF1] F5 [SF2] F6 [SF3] F7 [SF4] F8	Defined in SONAR.

On/Off page

Jog PRM	Loop On	Home	Dial	Page List	
Marker	Loop	Select	Punch	–	M1

Buttons	Functions
[F1] Marker	Turns the Marker on or off.
[F6] M1 + [F1] Marker	Open the window for entering the Marker to the current song position.
[F2] Loop	Turns the mode in which you can set the Loop position on or off.
[F6] M1 + [F2] Loop	Opens the Loop/Audio Shuttle dialog.
[F3] Select	Turns the mode in which you can set From/Thru time on or off.
[F6] M1 + [F3] Select	Turns the function that selects the data in the selected channel on or off.
[F4] Punch	Turns the mode in which you can set Punch In/Out on or off.
[F6] M1 + [F4] Punch	Opens the Record Options dialog.
[EDIT] M2 + [F4] Punch	Sets Punch In/Out Record to on, then sets Punch In/Out position to the top of the song.
[F6] M1 + [◀◀]	In modes for which Loop position can be set (From/Thru time, or Punch In/Out), this sets the start position to the current position. Otherwise, this sets the current position to the top of the song.
[F6] M1 + [▶▶]	In modes for which Loop position can be set (From/Thru time, or Punch In/Out), this sets the end position to the current position. Otherwise, this sets the current position to the end of the song.
[SF1] Jog PRM	Turns Data Entry on and off. When turned on (the lamp lights), rotating the dial has the Data Entry function.
[SF2] Loop On	Sets Loop to on or off.
[SF3] Home	Moves the song position to the top of the song.

Cursor page

◀	▶	Scrub	Dial	Page List	
▼	▲	Zoom	◀ Bank	Bank ▶	M1

Buttons	Functions
Cursor buttons [F1] ▲/[F2] ▼/ [SF1] ◀/[SF2] ▶	Moves the cursor in the LCD of the MOTIF XF.
[F3] Zoom	Turns Zoom on or off.
[F4] ◀ Bank [F5] Bank ▶	Scrolls through the track indication on the LCD of the MOTIF XF every eight channels.
[SF3] Scrub	Turns Scrub on or off. When Scrub is on, the dial can be used for Scrub playback. When Scrub is off, the dial is used to move the song position.

Note
- The Song Position Bar may not synchronize with the actual playback position during Scrub playback.
- Parameters to be edited may differ depending on the assigned Effect and Software Tone Generator.
- Some parameters may not be available depending on the selected Effect Type.
- The [M2] – [M4] buttons correspond respectively to the [EDIT], [JOB], and [STORE] buttons.
- Additional operations other than those listed above are available. For details, refer to the relevant documentation of DAW remote control you are using.
- You can find the Help window by selecting “Mackie Control” from the Tool Menu on SONAR and pressing the [F1] button.
- Please keep in mind that some functions may not be available.

■ When controlling Digital Performer 6

A specific function has been assigned to each page. Use the [SELECTED PART CONTROL] and [MULTI PART CONTROL] button to select the desired page.

Assignment page

Sends	Plug-ins	Dyn	Dial	Page List	
I/O	Pan	EQ	◀ Bank	Bank ▶	Shift

Buttons	Functions
[F1] I/O	Calls up the Mode List display.
[F4] ◀ Bank [F5] Bank ▶	Scrolls through the track indication on the LCD of the MOTIF XF every eight channels.

● PAN mode
[F2] Pan (or [F1] I/O → Knob 1 → [ENTER])

Buttons/Knobs	Functions
Knobs 1 – 8	For editing parameters (such as Pan).
[SF3] + [ENTER] (with the cursor on any channel.)	Resets the parameter value to the default.
Call up the Fader Banks page, then press [SF1] Flip	Exchanges the functions between the Channel Knobs and the Faders.
[F2] Pan in the PAN mode	Alternately hides/shows the Level Meter.

- **SndVal mode (for Audio track)**
  [SF1] Sends (or [F1] I/O → Knob 2 → [ENTER])

Buttons/Knobs	Functions
Knobs 1 – 8	For editing the Send value of the selected bus.
Cursor buttons [∧]/[∨]	Changes the Send number (bus).
[ENTER] (with the cursor on any channel.)	Mutes or unmutes the selected bus.
[SF3] + [ENTER] (with the cursor on any channel.)	Resets the Send value of the selected bus to the default.
Call up the Fader Banks page, then press the [SF1] Flip	Exchanges the functions between the Channel Knobs and the Faders.
[SF1] Sends in the SndVal mode	Alternately hides/shows the Level Meter.

- **SndPan mode (for Audio track)**
  [F1] I/O → Knob 3 → [ENTER]

Buttons/Knobs	Functions
Knobs 1 – 8	For editing the Pan of the selected bus.
Cursor buttons [∧]/[∨]	Changes the Send number (bus).
[ENTER] (with the cursor on any channel.)	Mutes or unmutes the selected bus.
[SF3] + [ENTER] (with the cursor on any channe.l)	Resets the Send value of the selected bus to the default.
Call up the Fader Banks page, then press the [SF1] Flip	Exchanges the functions between the Channel Knobs and the Faders.

- **SndOut mode**
  [F1] I/O → Knob 4 → [ENTER]

Buttons/Knobs	Functions
Cursor buttons [∧]/[∨]	Changes the Send number (bus).
Knobs 1 – 8	Selects the selected bus destination.
[ENTER] (with the cursor on any channel; except when selecting a bus)	Switches between Send PRE and POST.

- **EFFECT mode**
  [SF2] Plug-ins (or [F1] I/O → Knob 7 → [ENTER])

Buttons/Knobs	Functions
Knobs 1 – 8	Selects a Plug-in Effect for each track.
[F3] EQ + [ENTER] (with the cursor on any channel.)	Assigns the Parametric EQ to the corresponding track (for Audio track)
Cursor buttons [∧]/[∨]	Changes the Effect Number (Slot).
[ENTER] (with the cursor on any channel)	Turns the Effect Bypass on or off. When the bus is turned on, X is indicated above the Effect name.
[SF2] Edit + [ENTER] (from the Fader Banks page with the cursor on any channel; when any track is selected on the DAW)	Enters the Plug-in Effect Edit mode. (Available only when the Plug-in Effect is selected.) Please keep in mind that some parameters may not be available depending on the selected Effect Type. Press the [SF2] EDIT button again to exit from the Edit mode.

- **EDIT mode**

Buttons/Knobs	Functions
Knobs 1 – 8	For editing parameters.
Cursor buttons [∧]/[∨]	Changes an Effect Number.
Call up the Cursor page, then press the [SF1] ◀/[SF2] ▶	Calls up the Effect of a different track.
Call up the Fader Banks page, then press the [F1] ◀ Channel/ [F2] Channel ▶	Changes the parameters to be edited with the Knobs in order one by one.
[F4] ◀ Bank [F5] Bank ▶	Changes the parameters to be edited with the Knobs in groups of eight.
Call up the Fader Banks page, then press the [SF1] Flip	Exchanges the functions between the Channel Knobs and the Faders.

- **Prefs mode**
  [F1] I/O → Knob 8 → [ENTER]

Buttons/Knobs	Functions
Knobs 1 – 3	Selects the parameter to be edited.
[ENTER] (with the cursor on channel 1 – 3.)	Changes the value of a selected parameter.

Fader Banks page

Flip	Edit	Lvl Meters	Dial	Page List	
◀ Channel	Channel ▶	–	◀ Bank	Bank ▶	Shift

Buttons	Functions
[F1] ◀ Channel [F2] Channel ▶	Scrolls through the track indication channel-by-channel.
[F4] ◀ Bank [F5] Bank ▶	Scrolls through the track indication on the LCD of the MOTIF XF every eight channels.
[SF1] Flip	Exchanges the functions between the Channel Knobs and the Faders.
[SF3] Lvl Meters	Alternately hides/shows the Level Meter.

TR Group page

SEQ Editor	TR View	Mix Board	Dial	Page List	
Group	Ungroup	Suspend	◀ Bank	Bank ▶	Shift

Buttons	Functions
[F1] Group	Groups multiple tracks.
[F4] ◀ Bank [F5] Bank ▶	Scrolls through the track indication on the LCD of the MOTIF XF every eight channels.
[SF2] TR View	Brings the Track Overview to front.
[SF3] Mix Board	Starts the Mixer window.
[SF1] SEQ Editor	Starts the Sequencer Editor window, or displays it to front.
[F6] Shift + [SF1] SEQ Editor	Starts the Soundbites window.

Dialog page

Overdub	Ptch Thru	Clear Clip	Dial	Page List	
Enter	Escape	Click	Count Off	–	Shift

Buttons	Functions
[F3] Click	Turns Click on or off.
[F4] Count Off	Turns Countdown for recording/playback on or off.
[SF1] Overdub	Turns Overdub recording on or off.
[SF3] Clear Clip	Clears the clipping indicator in the level meter.

Project page

Undo	Redo	Save	Audible	Page List	
Slave Ext	Mem Link	P/P Roll	◀ Bank	Bank ▶	Shift

Buttons	Functions
[F1] Slave Ext	Switches the clock between internal and external.
[F2] Mem Link	Sets Link Memory to Selection and Link Playback to Memory to on.
[F4] ◀ Bank [F5] Bank ▶	Scrolls through the track indication on the LCD of the MOTIF XF every eight channels.
[SF1] Undo	Executes the Undo operation.
[SF2] Redo	Executes the Redo operation.
[SF3] Save	When the lamp lights, press this so that the lamp flashes. Press this again to execute the Save operation (lamp turns off).
[SF4] Audible	Switches Audible mode on or off.

On/Off page

Punch	Select	Solo	Dial	Page List	
Marker	Edit Grid	Cycle	◀ Bank	Bank ▶	Shift

Buttons	Functions
[JOB] CONTROL + [F3] Cycle	Turns Loop on or off.
[F1] Marker	Turns the Marker on or off.
[F6] Shift + [F1] Marker	Opens the Marker Option window.
[F6] Shift + [F2] Edit Grid	Displays the Nudge Amount window.
[F3] Cycle	Sets Cycle to on.
[F4] ◀ Bank [F5] Bank ▶	Scrolls through the track indication on the LCD of the MOTIF XF every eight channels.
[SF1] Punch	Sets the current song position to the Punch In/Out position.
[SF2] Select	Selects all tracks (if all tracks have not been selected).
[SF3] Solo	Turns Solo mode on or off.

Cursor page

◀	▶	Scrub	Dial	Page List	
▼	▲	Zoom	◀ Bank	Bank ▶	Shift

Buttons	Functions
Cursor buttons [F1] ▲/[F2] ▼/ [SF1] ◀/[SF2] ▶	Scrolls through the display.
[F3] Zoom	Switches between Scroll (lamp lights), Zoom (lamp is off), and Nudge (lamp flashes).
[F4] ◀ Bank [F5] Bank ▶	Scrolls through the track indication on the LCD of the MOTIF XF every eight channels.
[SF3] Scrub	Turns Scrub on and off. When turned on, you can use the dial to move the song position.

NOTE
- Some parameters may not be available depending on the Effect Type.
- The [OPTION], [CONTROL], and [COMMAND] buttons on the Mackie Control correspond respectively to the [EDIT], [JOB], and [STORE] buttons.
- Additional operations other than those listed above are available. For details, refer to the relevant documentation of DAW remote control you are using.
- Please keep in mind that some functions may not be available.

GNU GENERAL PUBLIC LICENSE

Version 2, June 1991

Copyright © 1989, 1991 Free Software Foundation, Inc., 51 Franklin Street, Fifth Floor, Boston, MA 02110-1301 USA
Everyone is permitted to copy and distribute verbatim copies of this license document, but changing it is not allowed.

Preamble

The licenses for most software are designed to take away your freedom to share and change it. By contrast, the GNU General Public License is intended to guarantee your freedom to share and change free software—to make sure the software is free for all its users. This General Public License applies to most of the Free Software Foundation's software and to any other program whose authors commit to using it. (Some other Free Software Foundation software is covered by the GNU Lesser General Public License instead.) You can apply it to your programs, too.

When we speak of free software, we are referring to freedom, not price. Our General Public Licenses are designed to make sure that you have the freedom to distribute copies of free software (and charge for this service if you wish), that you receive source code or can get it if you want it, that you can change the software or use pieces of it in new free programs; and that you know you can do these things.

To protect your rights, we need to make restrictions that forbid anyone to deny you these rights or to ask you to surrender the rights. These restrictions translate to certain responsibilities for you if you distribute copies of the software, or if you modify it.

For example, if you distribute copies of such a program, whether gratis or for a fee, you must give the recipients all the rights that you have. You must make sure that they, too, receive or can get the source code. And you must show them these terms so they know their rights.

We protect your rights with two steps: (1) copyright the software, and (2) offer you this license which gives you legal permission to copy, distribute and/or modify the software.

Also, for each author's protection and ours, we want to make certain that everyone understands that there is no warranty for this free software. If the software is modified by someone else and passed on, we want its recipients to know that what they have is not the original, so that any problems introduced by others will not reflect on the original authors' reputations.

Finally, any free program is threatened constantly by software patents. We wish to avoid the danger that redistributors of a free program will individually obtain patent licenses, in effect making the program proprietary. To prevent this, we have made it clear that any patent must be licensed for everyone's free use or not licensed at all.

The precise terms and conditions for copying, distribution and modification follow.

GNU GENERAL PUBLIC LICENSE TERMS AND CONDITIONS FOR COPYING, DISTRIBUTION AND MODIFICATION

0. This License applies to any program or other work which contains a notice placed by the copyright holder saying it may be distributed under the terms of this General Public License. The "Program", below, refers to any such program or work, and a "work based on the Program" means either the Program or any derivative work under copyright law: that is to say, a work containing the Program or a portion of it, either verbatim or with modifications and/or translated into another language. (Hereinafter, translation is included without limitation in the term "modification".) Each licensee is addressed as "you".

Activities other than copying, distribution and modification are not covered by this License; they are outside its scope. The act of running the Program is not restricted, and the output from the Program is covered only if its contents constitute a work based on the Program (independent of having been made by running the Program). Whether that is true depends on what the Program does.

1. You may copy and distribute verbatim copies of the Program's source code as you receive it, in any medium, provided that you conspicuously and appropriately publish on each copy an appropriate copyright notice and disclaimer of warranty; keep intact all the notices that refer to this License and to the absence of any warranty; and give any other recipients of the Program a copy of this License along with the Program.

You may charge a fee for the physical act of transferring a copy, and you may at your option offer warranty protection in exchange for a fee.

2. You may modify your copy or copies of the Program or any portion of it, thus forming a work based on the Program, and copy and distribute such modifications or work under the terms of Section 1 above, provided that you also meet all of these conditions:

a) You must cause the modified files to carry prominent notices stating that you changed the files and the date of any change.

b) You must cause any work that you distribute or publish, that in whole or in part contains or is derived from the Program or any part thereof, to be licensed as a whole at no charge to all third parties under the terms of this License.

c) If the modified program normally reads commands interactively when run, you must cause it, when started running for such interactive use in the most ordinary way, to print or display an announcement including an appropriate copyright notice and a notice that there is no warranty (or else, saying that you provide a warranty) and that users may redistribute the program under these conditions, and telling the user how to view a copy of this License. (Exception: if the Program itself is interactive but does not normally print such an announcement, your work based on the Program is not required to print an announcement.)

These requirements apply to the modified work as a whole. If identifiable sections of that work are not derived from the Program, and can be reasonably considered independent and separate works in themselves, then this License, and its terms, do not apply to those sections when you distribute them as separate works. But when you distribute the same sections as part of a whole which is a work based on the Program, the distribution of the whole must be on the terms of this License, whose permissions for other licensees extend to the entire whole, and thus to each and every part regardless of who wrote it.

Thus, it is not the intent of this section to claim rights or contest your rights to work written entirely by you; rather, the intent is to exercise the right to control the distribution of derivative or collective works based on the Program.

In addition, mere aggregation of another work not based on the Program with the Program (or with a work based on the Program) on a volume of a storage or distribution medium does not bring the other work under the scope of this License.

3. You may copy and distribute the Program (or a work based on it, under Section 2) in object code or executable form under the terms of Sections 1 and 2 above provided that you also do one of the following:

a) Accompany it with the complete corresponding machine-readable source code, which must be distributed under the terms of Sections 1 and 2 above on a medium customarily used for software interchange; or,

b) Accompany it with a written offer, valid for at least three years, to give any third party, for a charge no more than your cost of physically performing source distribution, a complete machine-readable copy of the corresponding source code, to be distributed under the terms of Sections 1 and 2 above on a medium customarily used for software interchange; or,

c) Accompany it with the information you received as to the offer to distribute corresponding source code. (This alternative is allowed only for noncommercial distribution and only if you received the program in object code or executable form with such an offer, in accord with Subsection b above.)

The source code for a work means the preferred form of the work for making modifications to it. For an executable work, complete source code means all the source code for all modules it contains, plus any associated interface definition files, plus the scripts used to control compilation and installation of the executable. However, as a special exception, the source code distributed need not include anything that is normally distributed (in either source or binary form) with the major components (compiler, kernel, and so on) of the operating system on which the executable runs, unless that component itself accompanies the executable.

If distribution of executable or object code is made by offering access to copy from a designated place, then offering equivalent access to copy the source code from the same place counts as distribution of the source code, even though third parties are not compelled to copy the source along with the object code.

4. You may not copy, modify, sublicense, or distribute the Program except as expressly provided under this License. Any attempt otherwise to copy, modify, sublicense or distribute the Program is void, and will automatically terminate your rights under this License. However, parties who have received copies, or rights, from you under this License will not have their licenses terminated so long as such parties remain in full compliance.

5. You are not required to accept this License, since you have not signed it. However, nothing else grants you permission to modify or distribute the Program or its derivative works. These actions are prohibited by law if you do not accept this License. Therefore, by modifying or distributing the Program (or any work based on the Program), you indicate your

acceptance of this License to do so, and all its terms and conditions for copying, distributing or modifying the Program or works based on it.

6. Each time you redistribute the Program (or any work based on the Program), the recipient automatically receives a license from the original licensor to copy, distribute or modify the Program subject to these terms and conditions. You may not impose any further restrictions on the recipients' exercise of the rights granted herein. You are not responsible for enforcing compliance by third parties to this License.

7. If, as a consequence of a court judgment or allegation of patent infringement or for any other reason (not limited to patent issues), conditions are imposed on you (whether by court order, agreement or otherwise) that contradict the conditions of this License, they do not excuse you from the conditions of this License. If you cannot distribute so as to satisfy simultaneously your obligations under this License and any other pertinent obligations, then as a consequence you may not distribute the Program at all. For example, if a patent license would not permit royalty-free redistribution of the Program by all those who receive copies directly or indirectly through you, then the only way you could satisfy both it and this License would be to refrain entirely from distribution of the Program.

If any portion of this section is held invalid or unenforceable under any particular circumstance, the balance of the section is intended to apply and the section as a whole is intended to apply in other circumstances.

It is not the purpose of this section to induce you to infringe any patents or other property right claims or to contest validity of any such claims; this section has the sole purpose of protecting the integrity of the free software distribution system, which is implemented by public license practices. Many people have made generous contributions to the wide range of software distributed through that system in reliance on consistent application of that system; it is up to the author/donor to decide if he or she is willing to distribute software through any other system and a licensee cannot impose that choice.

This section is intended to make thoroughly clear what is believed to be a consequence of the rest of this License.

8. If the distribution and/or use of the Program is restricted in certain countries either by patents or by copyrighted interfaces, the original copyright holder who places the Program under this License may add an explicit geographical distribution limitation excluding those countries, so that distribution is permitted only in or among countries not thus excluded. In such case, this License incorporates the limitation as if written in the body of this License.

9. The Free Software Foundation may publish revised and/or new versions of the General Public License from time to time. Such new versions will be similar in spirit to the present version, but may differ in detail to address new problems or concerns.

Each version is given a distinguishing version number. If the Program specifies a version number of this License which applies to it and "any later version", you have the option of following the terms and conditions either of that version or of any later version published by the Free Software Foundation. If the Program does not specify a version number of this License, you may choose any version ever published by the Free Software Foundation.

10. If you wish to incorporate parts of the Program into other free programs whose distribution conditions are different, write to the author to ask for permission. For software which is copyrighted by the Free Software Foundation, write to the Free Software Foundation; we sometimes make exceptions for this. Our decision will be guided by the two goals of preserving the free status of all derivatives of our free software and of promoting the sharing and reuse of software generally.

NO WARRANTY

11. BECAUSE THE PROGRAM IS LICENSED FREE OF CHARGE, THERE IS NO WARRANTY FOR THE PROGRAM, TO THE EXTENT PERMITTED BY APPLICABLE LAW. EXCEPT WHEN OTHERWISE STATED IN WRITING THE COPYRIGHT HOLDERS AND/OR OTHER PARTIES PROVIDE THE PROGRAM "AS IS" WITHOUT WARRANTY OF ANY KIND, EITHER EXPRESSED OR IMPLIED, INCLUDING, BUT NOT LIMITED TO, THE IMPLIED WARRANTIES OF MERCHANTABILITY AND FITNESS FOR A PARTICULAR PURPOSE. THE ENTIRE RISK AS TO THE QUALITY AND PERFORMANCE OF THE PROGRAM IS WITH YOU. SHOULD THE PROGRAM PROVE DEFECTIVE, YOU ASSUME THE COST OF ALL NECESSARY SERVICING, REPAIR OR CORRECTION.

12. IN NO EVENT UNLESS REQUIRED BY APPLICABLE LAW OR AGREED TO IN WRITING WILL ANY COPYRIGHT HOLDER, OR ANY OTHER PARTY WHO MAY MODIFY AND/OR REDISTRIBUTE THE PROGRAM AS PERMITTED ABOVE, BE LIABLE TO YOU FOR DAMAGES, INCLUDING ANY GENERAL, SPECIAL, INCIDENTAL OR CONSEQUENTIAL DAMAGES ARISING OUT OF THE USE OR INABILITY TO USE THE PROGRAM (INCLUDING BUT NOT LIMITED TO LOSS OF DATA OR DATA BEING RENDERED INACCURATE OR LOSSES SUSTAINED BY YOU OR THIRD PARTIES OR A FAILURE OF THE PROGRAM TO OPERATE WITH ANY OTHER PROGRAMS), EVEN IF SUCH HOLDER OR OTHER PARTY HAS BEEN ADVISED OF THE POSSIBILITY OF SUCH DAMAGES.

END OF TERMS AND CONDITIONS

How to Apply These Terms to Your New Programs

If you develop a new program, and you want it to be of the greatest possible use to the public, the best way to achieve this is to make it free software which everyone can redistribute and change under these terms.

To do so, attach the following notices to the program. It is safest to attach them to the start of each source file to most effectively convey the exclusion of warranty; and each file should have at least the "copyright" line and a pointer to where the full notice is found.

<one line to give the program's name and a brief idea of what it does.>
Copyright © <year> <name of author>

This program is free software; you can redistribute it and/or modify it under the terms of the GNU General Public License as published by the Free Software Foundation; either version 2 of the License, or (at your option) any later version.

This program is distributed in the hope that it will be useful, but WITHOUT ANY WARRANTY; without even the implied warranty of MERCHANTABILITY or FITNESS FOR A PARTICULAR PURPOSE. See the GNU General Public License for more details.

You should have received a copy of the GNU General Public License along with this program; if not, write to the Free Software Foundation, Inc., 51 Franklin Street, Fifth Floor, Boston, MA 02110-1301 USA.

Also add information on how to contact you by electronic and paper mail.

If the program is interactive, make it output a short notice like this when it starts in an interactive mode:

Gnomovision version 69, Copyright © year name of author Gnomovision comes with ABSOLUTELY NO WARRANTY; for details type 'show w'. This is free software, and you are welcome to redistribute it under certain conditions; type 'show c' for details.

The hypothetical commands 'show w' and 'show c' should show the appropriate parts of the General Public License. Of course, the commands you use may be called something other than 'show w' and 'show c'; they could even be mouse-clicks or menu items—whatever suits your program.

You should also get your employer (if you work as a programmer) or your school, if any, to sign a "copyright disclaimer" for the program, if necessary. Here is a sample; alter the names:

Yoyodyne, Inc., hereby disclaims all copyright interest in the program 'Gnomovision' (which makes passes at compilers) written by James Hacker.

<signature of Ty Coon>, 1 April 1989
Ty Coon, President of Vice

This General Public License does not permit incorporating your program into proprietary programs. If your program is a subroutine library, you may consider it more useful to permit linking proprietary applications with the library. If this is what you want to do, use the GNU Lesser General Public License instead of this License.

GNU LESSER GENERAL PUBLIC LICENSE

Version 2.1, February 1999

Copyright © 1991, 1999 Free Software Foundation, Inc., 51 Franklin Street, Fifth Floor, Boston, MA 02110-1301 USA
Everyone is permitted to copy and distribute verbatim copies of this license document, but changing it is not allowed.

[This is the first released version of the Lesser GPL.
It also counts as the successor of the GNU Library Public License, version 2, hence the version number 2.1.]

Preamble

The licenses for most software are designed to take away your freedom to share and change it. By contrast, the GNU General Public Licenses are intended to guarantee your freedom to share and change free software—to make sure the software is free for all its users.

This license, the Lesser General Public License, applies to some specially designated software packages—typically libraries—of the Free Software Foundation and other authors who decide to use it. You can use it too, but we suggest you first think carefully about whether this license or the ordinary General Public License is the better strategy to use in any particular case, based on the explanations below.

When we speak of free software, we are referring to freedom of use, not price. Our General Public Licenses are designed to make sure that you have the freedom to distribute copies of free software (and charge for this service if you wish); that you receive source code or can get it if you want it; that you can change the software and use pieces of it in new free programs; and that you are informed that you can do these things.

To protect your rights, we need to make restrictions that forbid distributors to deny you these rights or to ask you to surrender these rights. These restrictions translate to certain responsibilities for you if you distribute copies of the library or if you modify it.

For example, if you distribute copies of the library, whether gratis or for a fee, you must give the recipients all the rights that we gave you. You must make sure that they, too, receive or can get the source code. If you link other code with the library, you must provide complete object files to the recipients, so that they can relink them with the library after making changes to the library and recompiling it. And you must show them these terms so they know their rights.

We protect your rights with a two-step method: (1) we copyright the library, and (2) we offer you this license, which gives you legal permission to copy, distribute and/or modify the library.

To protect each distributor, we want to make it very clear that there is no warranty for the free library. Also, if the library is modified by someone else and passed on, the recipients should know that what they have is not the original version, so that the original author's reputation will not be affected by problems that might be introduced by others.

Finally, software patents pose a constant threat to the existence of any free program. We wish to make sure that a company cannot effectively restrict the users of a free program by obtaining a restrictive license from a patent holder. Therefore, we insist that any patent license obtained for a version of the library must be consistent with the full freedom of use specified in this license.

Most GNU software, including some libraries, is covered by the ordinary GNU General Public License. This license, the GNU Lesser General Public License, applies to certain designated libraries, and is quite different from the ordinary General Public License. We use this license for certain libraries in order to permit linking those libraries into non-free programs.

When a program is linked with a library, whether statically or using a shared library, the combination of the two is legally speaking a combined work, a derivative of the original library. The ordinary General Public License therefore permits such linking only if the entire combination fits its criteria of freedom. The Lesser General Public License permits more lax criteria for linking other code with the library.

We call this license the “Lesser” General Public License because it does Less to protect the user’s freedom than the ordinary General Public License. It also provides other free software developers Less of an advantage over competing non-free programs. These disadvantages are the reason we use the ordinary General Public License for many libraries. However, the Lesser license provides advantages in certain special circumstances.

For example, on rare occasions, there may be a special need to encourage the widest possible use of a certain library, so that it becomes a de-facto standard. To achieve this, non-free programs must be allowed to use the library. A more frequent case is that a free library does the same job as widely used non-free libraries. In this case, there is little to gain by limiting the free library to free software only, so we use the Lesser General Public License.

In other cases, permission to use a particular library in non-free programs enables a greater number of people to use a large body of free software. For example, permission to use the GNU C Library in non-free programs enables many more people to use the whole GNU operating system, as well as its variant, the GNU/Linux operating system.

Although the Lesser General Public License is Less protective of the users’ freedom, it does ensure that the user of a program that is linked with the Library has the freedom and the wherewithal to run that program using a modified version of the Library.

The precise terms and conditions for copying, distribution and modification follow. Pay close attention to the difference between a “work based on the library” and a “work that uses the library”. The former contains code derived from the library, whereas the latter must be combined with the library in order to run.

GNU LESSER GENERAL PUBLIC LICENSE TERMS AND CONDITIONS FOR COPYING, DISTRIBUTION AND MODIFICATION

0. This License Agreement applies to any software library or other program which contains a notice placed by the copyright holder or other authorized party saying it may be distributed under the terms of this Lesser General Public License (also called “this License”). Each licensee is addressed as “you”.

A “library” means a collection of software functions and/or data prepared so as to be conveniently linked with application programs (which use some of those functions and data) to form executables.

The “Library”, below, refers to any such software library or work which has been distributed under these terms. A “work based on the Library” means either the Library or any derivative work under copyright law: that is to say, a work containing the Library or a portion of it, either verbatim or with modifications and/or translated straightforwardly into another language. (Hereinafter, translation is included without limitation in the term “modification”.)

“Source code” for a work means the preferred form of the work for making modifications to it. For a library, complete source code means all the source code for all modules it contains, plus any associated interface definition files, plus the scripts used to control compilation and installation of the library.

Activities other than copying, distribution and modification are not covered by this License; they are outside its scope. The act of running a program using the Library is not restricted, and output from such a program is covered only if its contents constitute a work based on the Library (independent of the use of the Library in a tool for writing it). Whether that is true depends on what the Library does and what the program that uses the Library does.

1. You may copy and distribute verbatim copies of the Library's complete source code as you receive it, in any medium, provided that you conspicuously and appropriately publish on each copy an appropriate copyright notice and disclaimer of warranty; keep intact all the notices that refer to this License and to the absence of any warranty; and distribute a copy of this License along with the Library.

You may charge a fee for the physical act of transferring a copy, and you may at your option offer warranty protection in exchange for a fee.

2. You may modify your copy or copies of the Library or any portion of it, thus forming a work based on the Library, and copy and distribute such modifications or work under the terms of Section 1 above, provided that you also meet all of these conditions:

a) The modified work must itself be a software library.

b) You must cause the files modified to carry prominent notices stating that you changed the files and the date of any change.

c) You must cause the whole of the work to be licensed at no charge to all third parties under the terms of this License.

d) If a facility in the modified Library refers to a function or a table of data to be supplied by an application program that uses the facility, other than as an argument passed when the facility is invoked, then you must make a good faith effort to ensure that, in the event an application does not supply such function or table, the facility still operates, and performs whatever part of its purpose remains meaningful.

(For example, a function in a library to compute square roots has a purpose that is entirely well-defined independent of the application. Therefore, Subsection 2d requires that any application-supplied function or table used by this function must be optional: if the application does not supply it, the square root function must still compute square roots.)

These requirements apply to the modified work as a whole. If identifiable sections of that work are not derived from the Library, and can be reasonably considered independent and separate works in themselves, then this License, and its terms, do not apply to those sections when you distribute them as separate works. But when you distribute the same

sections as part of a whole which is a work based on the Library, the distribution of the whole must be on the terms of this License, whose permissions for other licensees extend to the entire whole, and thus to each and every part regardless of who wrote it.

Thus, it is not the intent of this section to claim rights or contest your rights to work written entirely by you; rather, the intent is to exercise the right to control the distribution of derivative or collective works based on the Library.

In addition, mere aggregation of another work not based on the Library with the Library (or with a work based on the Library) on a volume of a storage or distribution medium does not bring the other work under the scope of this License.

3. You may opt to apply the terms of the ordinary GNU General Public License instead of this License to a given copy of the Library. To do this, you must alter all the notices that refer to this License, so that they refer to the ordinary GNU General Public License, version 2, instead of to this License. (If a newer version than version 2 of the ordinary GNU General Public License has appeared, then you can specify that version instead if you wish.) Do not make any other change in these notices.

Once this change is made in a given copy, it is irreversible for that copy, so the ordinary GNU General Public License applies to all subsequent copies and derivative works made from that copy.

This option is useful when you wish to copy part of the code of the Library into a program that is not a library.

4. You may copy and distribute the Library (or a portion or derivative of it, under Section 2) in object code or executable form under the terms of Sections 1 and 2 above provided that you accompany it with the complete corresponding machine-readable source code, which must be distributed under the terms of Sections 1 and 2 above on a medium customarily used for software interchange.

If distribution of object code is made by offering access to copy from a designated place, then offering equivalent access to copy the source code from the same place satisfies the requirement to distribute the source code, even though third parties are not compelled to copy the source along with the object code.

5. A program that contains no derivative of any portion of the Library, but is designed to work with the Library by being compiled or linked with it, is called a “work that uses the Library”. Such a work, in isolation, is not a derivative work of the Library, and therefore falls outside the scope of this License.

However, linking a “work that uses the Library” with the Library creates an executable that is a derivative of the Library (because it contains portions of the Library), rather than a “work that uses the library”. The executable is therefore covered by this License. Section 6 states terms for distribution of such executables.

When a “work that uses the Library” uses material from a header file that is part of the Library, the object code for the work may be a derivative work of the Library even though the source code is not. Whether this is true is especially significant if the work can be linked without the Library, or if the work is itself a library. The threshold for this to be true is not precisely defined by law.

If such an object file uses only numerical parameters, data structure layouts and accessors, and small macros and small inline functions (ten lines or less in length), then the use of the object file is unrestricted, regardless of whether it is legally a derivative work. (Executables containing this object code plus portions of the Library will still fall under Section 6.)

Otherwise, if the work is a derivative of the Library, you may distribute the object code for the work under the terms of Section 6. Any executables containing that work also fall under Section 6, whether or not they are linked directly with the Library itself.

6. As an exception to the Sections above, you may also combine or link a “work that uses the Library” with the Library to produce a work containing portions of the Library, and distribute that work under terms of your choice, provided that the terms permit modification of the work for the customer's own use and reverse engineering for debugging such modifications.

You must give prominent notice with each copy of the work that the Library is used in it and that the Library and its use are covered by this License. You must supply a copy of this License. If the work during execution displays copyright notices, you must include the copyright notice for the Library among them, as well as a reference directing the user to the copy of this License. Also, you must do one of these things:

a) Accompany the work with the complete corresponding machine-readable source code for the Library including whatever changes were used in the work (which must be distributed under Sections 1 and 2 above); and, if the work is an executable linked with the Library, with the complete machine-readable “work that uses the Library”, as object code and/or source code, so that the user can modify the Library and then relink to produce a modified executable containing the modified Library. (It is understood that the user who changes the contents of definitions files in the Library will not necessarily be able to recompile the application to use the modified definitions.)

b) Use a suitable shared library mechanism for linking with the Library. A suitable mechanism is one that (1) uses at run time a copy of the library already present on the user's computer system, rather than copying library functions into the executable, and (2) will operate properly with a modified version of the library, if the user installs one, as long as the modified version is interface-compatible with the version that the work was made with.

c) Accompany the work with a written offer, valid for at least three years, to give the same user the materials specified in Subsection 6a, above, for a charge no more than the cost of performing this distribution.

d) If distribution of the work is made by offering access to copy from a designated place, offer equivalent access to copy the above specified materials from the same place.

e) Verify that the user has already received a copy of these materials or that you have already sent this user a copy.

For an executable, the required form of the “work that uses the Library” must include any data and utility programs needed for reproducing the executable from it. However, as a special exception, the materials to be distributed need not include anything that is normally distributed (in either source or binary form) with the major components (compiler, kernel, and so on) of the operating system on which the executable runs, unless that component itself accompanies the executable.

It may happen that this requirement contradicts the license restrictions of other proprietary libraries that do not normally accompany the operating system. Such a contradiction means you cannot use both them and the Library together in an executable that you distribute.

7. You may place library facilities that are a work based on the Library side-by-side in a single library together with other library facilities not covered by this License, and distribute such a combined library, provided that the separate distribution of the work based on the Library and of the other library facilities is otherwise permitted, and provided that you do these two things:

a) Accompany the combined library with a copy of the same work based on the Library, uncombined with any other library facilities. This must be distributed under the terms of the Sections above.

b) Give prominent notice with the combined library of the fact that part of it is a work based on the Library, and explaining where to find the accompanying uncombined form of the same work.

8. You may not copy, modify, sublicense, link with, or distribute the Library except as expressly provided under this License. Any attempt otherwise to copy, modify, sublicense, link with, or distribute the Library is void, and will automatically terminate your rights under this License. However, parties who have received copies, or rights, from you under this License will not have their licenses terminated so long as such parties remain in full compliance.

9. You are not required to accept this License, since you have not signed it. However, nothing else grants you permission to modify or distribute the Library or its derivative works. These actions are prohibited by law if you do not accept this License. Therefore, by modifying or distributing the Library (or any work based on the Library), you indicate your acceptance of this License to do so, and all its terms and conditions for copying, distributing or modifying the Library or works based on it.

10. Each time you redistribute the Library (or any work based on the Library), the recipient automatically receives a license from the original licensor to copy, distribute, link with or modify the Library subject to these terms and conditions. You may not impose any further restrictions on the recipients' exercise of the rights granted herein. You are not responsible for enforcing compliance by third parties with this License.

11. If, as a consequence of a court judgment or allegation of patent infringement or for any other reason (not limited to patent issues), conditions are imposed on you (whether by court order, agreement or otherwise) that contradict the conditions of this License, they do not excuse you from the conditions of this License. If you cannot distribute so as to satisfy simultaneously your obligations under this License and any other pertinent obligations, then as a consequence you may not distribute the Library at all. For example, if a patent license would not permit royalty-free redistribution of the Library by all those who receive copies directly or indirectly through you, then the only way you could satisfy both it and this License would be to refrain entirely from distribution of the Library.

If any portion of this section is held invalid or unenforceable under any particular circumstance, the balance of the section is intended to apply, and the section as a whole is intended to apply in other circumstances.

It is not the purpose of this section to induce you to infringe any patents or other property right claims or to contest validity of any such claims; this section has the sole purpose of protecting the integrity of the free software distribution system which is implemented by public license practices. Many people have made generous contributions to the wide range of

software distributed through that system in reliance on consistent application of that system; it is up to the author/donor to decide if he or she is willing to distribute software through any other system and a licensee cannot impose that choice.

This section is intended to make thoroughly clear what is believed to be a consequence of the rest of this License.

12. If the distribution and/or use of the Library is restricted in certain countries either by patents or by copyrighted interfaces, the original copyright holder who places the Library under this License may add an explicit geographical distribution limitation excluding those countries, so that distribution is permitted only in or among countries not thus excluded. In such case, this License incorporates the limitation as if written in the body of this License.

13. The Free Software Foundation may publish revised and/or new versions of the Lesser General Public License from time to time. Such new versions will be similar in spirit to the present version, but may differ in detail to address new problems or concerns.

Each version is given a distinguishing version number. If the Library specifies a version number of this License which applies to it and "any later version", you have the option of following the terms and conditions either of that version or of any later version published by the Free Software Foundation. If the Library does not specify a license version number, you may choose any version ever published by the Free Software Foundation.

14. If you wish to incorporate parts of the Library into other free programs whose distribution conditions are incompatible with these, write to the author to ask for permission. For software which is copyrighted by the Free Software Foundation, write to the Free Software Foundation; we sometimes make exceptions for this. Our decision will be guided by the two goals of preserving the free status of all derivatives of our free software and of promoting the sharing and reuse of software generally.

NO WARRANTY

15. BECAUSE THE LIBRARY IS LICENSED FREE OF CHARGE, THERE IS NO WARRANTY FOR THE LIBRARY, TO THE EXTENT PERMITTED BY APPLICABLE LAW. EXCEPT WHEN OTHERWISE STATED IN WRITING THE COPYRIGHT HOLDERS AND/OR OTHER PARTIES PROVIDE THE LIBRARY "AS IS" WITHOUT WARRANTY OF ANY KIND, EITHER EXPRESSED OR IMPLIED, INCLUDING, BUT NOT LIMITED TO, THE IMPLIED WARRANTIES OF MERCHANTABILITY AND FITNESS FOR A PARTICULAR PURPOSE. THE ENTIRE RISK AS TO THE QUALITY AND PERFORMANCE OF TH LIBRARY IS WITH YOU. SHOULD THE LIBRARY PROVE DEFECTIVE, YOU ASSUME THE COST OF ALL NECESSARY SERVICING, REPAIR OR CORRECTION.

16. IN NO EVENT UNLESS REQUIRED BY APPLICABLE LAW OR AGREED TO IN WRITING WILL ANY COPYRIGHT HOLDER, OR ANY OTHER PARTY WHO MAY MODIFY AND/OR REDISTRIBUTE THE LIBRARY AS PERMITTED ABOVE, BE LIABLE TO YOU FOR DAMAGES, INCLUDING ANY GENERAL, SPECIAL, INCIDENTAL OR CONSEQUENTIAL DAMAGES ARISING OUT OF THE USE OR INABILITY TO USE THE LIBRARY (INCLUDING BUT NOT LIMITED TO LOSS OF DATA OR DATA BEING RENDERED INACCURATE OR LOSSES SUSTAINED BY YOU OR THIRD PARTIES OR A FAILURE OF THE LIBRARY TO OPERATE WITH ANY OTHER SOFTWARE), EVEN IF SUCH HOLDER OR OTHER PARTY HAS BEEN ADVISED OF THE POSSIBILITY OF SUCH DAMAGES.

END OF TERMS AND CONDITIONS

How to Apply These Terms to Your New Libraries

If you develop a new library, and you want it to be of the greatest possible use to the public, we recommend making it free software that everyone can redistribute and change. You can do so by permitting redistribution under these terms (or, alternatively, under the terms of the ordinary General Public License).

To apply these terms, attach the following notices to the library. It is safest to attach them to the start of each source file to most effectively convey the exclusion of warranty; and each file should have at least the "copyright" line and a pointer to where the full notice is found.

<one line to give the library's name and a brief idea of what it does.>
Copyright © <year> <name of author>

This library is free software; you can redistribute it and/or modify it under the terms of the GNU Lesser General Public License as published by the Free Software Foundation; either version 2.1 of the License, or (at your option) any later version.

This library is distributed in the hope that it will be useful, but WITHOUT ANY WARRANTY; without even the implied warranty of MERCHANTABILITY or FITNESS FOR A PARTICULAR PURPOSE. See the GNU Lesser General Public License for more details.

You should have received a copy of the GNU Lesser General Public License along with this library; if not, write to the Free Software Foundation, Inc., 51 Franklin Street, Fifth Floor, Boston, MA 02110-1301 USA

Also add information on how to contact you by electronic and paper mail.

You should also get your employer (if you work as a programmer) or your school, if any, to sign a "copyright disclaimer" for the library, if necessary. Here is a sample; alter the names:

Yoyodyne, Inc., hereby disclaims all copyright interest in the library 'Frob' (a library for tweaking knobs) written by James Random Hacker.

<signature of Ty Coon>, 1 April 1990
Ty Coon, President of Vice

That's all there is to it!

expat

Copyright © 1998, 1999, 2000 Thai Open Source Software Center Ltd and Clark Cooper
Copyright © 2001, 2002, 2003 Expat maintainers.

Permission is hereby granted, free of charge, to any person obtaining a copy of this software and associated documentation files (the "Software"), to deal in the Software without restriction, including without limitation the rights to use, copy, modify, merge, publish, distribute, sublicense, and/or sell copies of the Software, and to permit persons to whom the Software is furnished to do so, subject to the following conditions:

The above copyright notice and this permission notice shall be included in all copies or substantial portions of the Software.

THE SOFTWARE IS PROVIDED "AS IS", WITHOUT WARRANTY OF ANY KIND, EXPRESS OR IMPLIED, INCLUDING BUT NOT LIMITED TO THE WARRANTIES OF MERCHANTABILITY, FITNESS FOR A PARTICULAR PURPOSE AND NONINFRINGEMENT. IN NO EVENT SHALL THE AUTHORS OR COPYRIGHT HOLDERS BE LIABLE FOR ANY CLAIM, DAMAGES OR OTHER LIABILITY, WHETHER IN AN ACTION OF CONTRACT, TORT OR OTHERWISE, ARISING FROM, OUT OF OR IN CONNECTION WITH THE SOFTWARE OR THE USE OR OTHER DEALINGS IN THE SOFTWARE.

freetype

The FreeType Project LICENSE

2002-Apr-11
Copyright 1996-2002 by David Turner, Robert Wilhelm, and Werner Lemberg

Introduction

The FreeType Project is distributed in several archive packages; some of them may contain, in addition to the FreeType font engine, various tools and contributions which rely on, or relate to, the FreeType Project.

This license applies to all files found in such packages, and which do not fall under their own explicit license. The license affects thus the FreeType font engine, the test programs, documentation and makefiles, at the very least.

This license was inspired by the BSD, Artistic, and IJG (Independent JPEG Group) licenses, which all encourage inclusion and use of free software in

commercial and freeware products alike. As a consequence, its main points are that:

- We don't promise that this software works. However, we will be interested in any kind of bug reports. ('as is' distribution)
- You can use this software for whatever you want, in parts or full form, without having to pay us. ('royalty-free' usage)
- You may not pretend that you wrote this software. If you use it, or only parts of it, in a program, you must acknowledge somewhere in your documentation that you have used the FreeType code. ('credits')

We specifically permit and encourage the inclusion of this software, with or without modifications, in commercial products. We disclaim all warranties covering The FreeType Project and assume no liability related to The FreeType Project.

Finally, many people asked us for a preferred form for a credit/disclaimer to use in compliance with this license. We thus encourage you to use the following text:

Portions of this software are copyright © 1996-2002 The FreeType Project (www.freetype.org). All rights reserved.

Legal Terms

0. Definitions

Throughout this license, the terms 'package', 'FreeType Project', and 'FreeType archive' refer to the set of files originally distributed by the authors (David Turner, Robert Wilhelm, and Werner Lemberg) as the 'FreeType Project', be they named as alpha, beta or final release.

'You' refers to the licensee, or person using the project, where 'using' is a generic term including compiling the project's source code as well as linking it to form a 'program' or 'executable'. This program is referred to as 'a program using the FreeType engine'.

This license applies to all files distributed in the original FreeType Project, including all source code, binaries and documentation, unless otherwise stated in the file in its original, unmodified form as distributed in the original archive. If you are unsure whether or not a particular file is covered by this license, you must contact us to verify this.

The FreeType Project is copyright © 1996-2000 by David Turner, Robert Wilhelm, and Werner Lemberg. All rights reserved except as specified below.

1. No Warranty

THE FREETYPE PROJECT IS PROVIDED 'AS IS' WITHOUT WARRANTY OF ANY KIND, EITHER EXPRESS OR IMPLIED, INCLUDING, BUT NOT LIMITED TO, WARRANTIES OF MERCHANTABILITY AND FITNESS FOR A PARTICULAR PURPOSE. IN NO EVENT WILL ANY OF THE AUTHORS OR COPYRIGHT HOLDERS BE LIABLE FOR ANY DAMAGES CAUSED BY THE USE OR THE INABILITY TO USE, OF THE FREETYPE PROJECT.

2. Redistribution

This license grants a worldwide, royalty-free, perpetual and irrevocable right and license to use, execute, perform, compile, display, copy, create derivative works of, distribute and sublicense the FreeType Project (in both source and object code forms) and derivative works thereof for any purpose; and to authorize others to exercise some or all of the rights granted herein, subject to the following conditions:

- Redistribution of source code must retain this license file ('FTL.TXT') unaltered; any additions, deletions or changes to the original files must be clearly indicated in accompanying documentation. The copyright notices of the unaltered, original files must be preserved in all copies of source files.
- Redistribution in binary form must provide a disclaimer that states that the software is based in part of the work of the FreeType Team, in the distribution documentation. We also encourage you to put an URL to the FreeType web page in your documentation, though this isn't mandatory.

These conditions apply to any software derived from or based on the FreeType Project, not just the unmodified files. If you use our work, you must acknowledge us. However, no fee need be paid to us.

3. Advertising

Neither the FreeType authors and contributors nor you shall use the name of the other for commercial, advertising, or promotional purposes without specific prior written permission.

We suggest, but do not require, that you use one or more of the following phrases to refer to this software in your documentation or advertising materials: 'FreeType Project', 'FreeType Engine', 'FreeType library', or 'FreeType Distribution'.

As you have not signed this license, you are not required to accept it. However, as the FreeType Project is copyrighted material, only this license, or another one contracted with the authors, grants you the right to use, distribute, and modify it.
Therefore, by using, distributing, or modifying the FreeType Project, you indicate that you understand and accept all the terms of this license.

4. Contacts

There are two mailing lists related to FreeType:

- freetype@freetype.org
  Discusses general use and applications of FreeType, as well as future and wanted additions to the library and distribution.
  If you are looking for support, start in this list if you haven't found anything to help you in the documentation.
- devel@freetype.org
  Discusses bugs, as well as engine internals, design issues, specific licenses, porting, etc.
- http://www.freetype.org
  Holds the current FreeType web page, which will allow you to download our latest development version and read online documentation.

You can also contact us individually at:
David Turner <david.turner@freetype.org>
Robert Wilhelm <robert.wilhelm@freetype.org>
Werner Lemberg <werner.lemberg@freetype.org>

glibc

This file contains the copying permission notices for various files in the GNU C Library distribution that have copyright owners other than the Free Software Foundation. These notices all require that a copy of the notice be included in the accompanying documentation and be distributed with binary distributions of the code, so be sure to include this file along with any binary distributions derived from the GNU C Library.

All code incorporated from 4.4 BSD is distributed under the following license:

Copyright © 1991 Regents of the University of California.
All rights reserved.

Redistribution and use in source and binary forms, with or without modification, are permitted provided that the following conditions are met:

1. Redistributions of source code must retain the above copyright notice, this list of conditions and the following disclaimer.
2. Redistributions in binary form must reproduce the above copyright notice, this list of conditions and the following disclaimer in the documentation and/or other materials provided with the distribution.
3. [This condition was removed.]
4. Neither the name of the University nor the names of its contributors may be used to endorse or promote products derived from this software without specific prior written permission.

THIS SOFTWARE IS PROVIDED BY THE REGENTS AND CONTRIBUTORS "AS IS" AND ANY EXPRESS OR IMPLIED WARRANTIES, INCLUDING, BUT NOT LIMITED TO, THE IMPLIED WARRANTIES OF MERCHANTABILITY AND FITNESS FOR A PARTICULAR PURPOSE ARE DISCLAIMED. IN NO EVENT SHALL THE REGENTS OR CONTRIBUTORS BE LIABLE FOR ANY DIRECT, INDIRECT, INCIDENTAL, SPECIAL, EXEMPLARY, OR CONSEQUENTIAL DAMAGES (INCLUDING, BUT NOT LIMITED TO, PROCUREMENT OF SUBSTITUTE GOODS OR SERVICES; LOSS OF USE, DATA, OR PROFITS; OR BUSINESS INTERRUPTION) HOWEVER CAUSED AND ON ANY THEORY OF LIABILITY, WHETHER IN CONTRACT, STRICT LIABILITY, OR TORT (INCLUDING NEGLIGENCE OR OTHERWISE) ARISING IN ANY WAY OUT OF THE USE OF THIS SOFTWARE, EVEN IF ADVISED OF THE POSSIBILITY OF SUCH DAMAGE.

The DNS resolver code, taken from BIND 4.9.5, is copyrighted both by UC Berkeley and by Digital Equipment Corporation. The DEC portions are under the following license:

Portions Copyright © 1993 by Digital Equipment Corporation.

Permission to use, copy, modify, and distribute this software for any purpose with or without fee is hereby granted, provided that the above copyright notice and this permission notice appear in all copies, and that the name of Digital Equipment Corporation not be used in advertising or publicity pertaining to distribution of the document or software without specific, written prior permission.

THE SOFTWARE IS PROVIDED "AS IS" AND DIGITAL EQUIPMENT CORP. DISCLAIMS ALL WARRANTIES WITH REGARD TO THIS SOFTWARE, INCLUDING ALL IMPLIED WARRANTIES OF MERCHANTABILITY AND FITNESS. IN NO EVENT SHALL DIGITAL EQUIPMENT CORPORATION BE LIABLE FOR ANY SPECIAL, DIRECT, INDIRECT, OR CONSEQUENTIAL DAMAGES OR ANY DAMAGES WHATSOEVER RESULTING FROM LOSS OF USE, DATA OR PROFITS, WHETHER IN AN ACTION OF CONTRACT, NEGLIGENCE OR OTHER TORTIOUS ACTION, ARISING OUT OF OR IN CONNECTION WITH THE USE OR PERFORMANCE OF THIS SOFTWARE.

The Sun RPC support (from rpcsrc-4.0) is covered by the following license:

Copyright © 1984, Sun Microsystems, Inc.

Sun RPC is a product of Sun Microsystems, Inc. and is provided for unrestricted use provided that this legend is included on all tape media and as a part of the software program in whole or part. Users may copy or modify Sun

RPC without charge, but are not authorized to license or distribute it to anyone else except as part of a product or program developed by the user.

SUN RPC IS PROVIDED AS IS WITH NO WARRANTIES OF ANY KIND INCLUDING THE WARRANTIES OF DESIGN, MERCHANTIBILITY AND FITNESS FOR A PARTICULAR PURPOSE, OR ARISING FROM A COURSE OF DEALING, USAGE OR TRADE PRACTICE.

Sun RPC is provided with no support and without any obligation on the part of Sun Microsystems, Inc. to assist in its use, correction, modification or enhancement.

SUN MICROSYSTEMS, INC. SHALL HAVE NO LIABILITY WITH RESPECT TO THE INFRINGEMENT OF COPYRIGHTS, TRADE SECRETS OR ANY PATENTS BY SUN RPC OR ANY PART THEREOF.

In no event will Sun Microsystems, Inc. be liable for any lost revenue or profits or other special, indirect and consequential damages, even if Sun has been advised of the possibility of such damages.

The following CMU license covers some of the support code for Mach, derived from Mach 3.0:

Mach Operating System
Copyright © 1991, 1990, 1989 Carnegie Mellon University
All Rights Reserved.

Permission to use, copy, modify and distribute this software and its documentation is hereby granted, provided that both the copyright notice and this permission notice appear in all copies of the software, derivative works or modified versions, and any portions thereof, and that both notices appear in supporting documentation.

CARNEGIE MELLON ALLOWS FREE USE OF THIS SOFTWARE IN ITS “AS IS” CONDITION. CARNEGIE MELLON DISCLAIMS ANY LIABILITY OF ANY KIND FOR ANY DAMAGES WHATSOEVER RESULTING FROM THE USE OF THIS SOFTWARE.

Carnegie Mellon requests users of this software to return to

Software Distribution Coordinator
School of Computer Science
Carnegie Mellon University
Pittsburgh, PA 15213-3890

or Software.Distribution@CS.CMU.EDU any improvements or extensions that they make and grant Carnegie Mellon the rights to redistribute these changes.

The file if_ppp.h is under the following CMU license:

Redistribution and use in source and binary forms, with or without modification, are permitted provided that the following conditions are met:

1. Redistributions of source code must retain the above copyright notice, this list of conditions and the following disclaimer.
2. Redistributions in binary form must reproduce the above copyright notice, this list of conditions and the following disclaimer in the documentation and/or other materials provided with the distribution.
3. Neither the name of the University nor the names of its contributors may be used to endorse or promote products derived from this software without specific prior written permission.

THIS SOFTWARE IS PROVIDED BY CARNEGIE MELLON UNIVERSITY AND CONTRIBUTORS “AS IS” AND ANY EXPRESS OR IMPLIED WARRANTIES, INCLUDING, BUT NOT LIMITED TO, THE IMPLIED WARRANTIES OF MERCHANTABILITY AND FITNESS FOR A PARTICULAR PURPOSE ARE DISCLAIMED.
IN NO EVENT SHALL THE UNIVERSITY OR CONTRIBUTORS BE LIABLE FOR ANY DIRECT, INDIRECT, INCIDENTAL, SPECIAL, EXEMPLARY, OR CONSEQUENTIAL DAMAGES (INCLUDING, BUT NOT LIMITED TO, PROCUREMENT OF SUBSTITUTE GOODS OR SERVICES; LOSS OF USE, DATA, OR PROFITS; OR BUSINESS INTERRUPTION) HOWEVER CAUSED AND ON ANY THEORY OF LIABILITY, WHETHER IN CONTRACT, STRICT LIABILITY, OR TORT (INCLUDING NEGLIGENCE OR OTHERWISE) ARISING IN ANY WAY OUT OF THE USE OF THIS SOFTWARE, EVEN IF ADVISED OF THE POSSIBILITY OF SUCH DAMAGE.

The following license covers the files from Intel’s “Highly Optimized Mathematical Functions for Itanium” collection:

Intel License Agreement

Copyright © 2000, Intel Corporation
All rights reserved.

Redistribution and use in source and binary forms, with or without modification, are permitted provided that the following conditions are met:

* Redistributions of source code must retain the above copyright notice, this list of conditions and the following disclaimer.
* Redistributions in binary form must reproduce the above copyright notice, this list of conditions and the following disclaimer in the documentation and/or other materials provided with the distribution.
* The name of Intel Corporation may not be used to endorse or promote products derived from this software without specific prior written permission.

THIS SOFTWARE IS PROVIDED BY THE COPYRIGHT HOLDERS AND CONTRIBUTORS “AS IS” AND ANY EXPRESS OR IMPLIED WARRANTIES, INCLUDING, BUT NOT LIMITED TO, THE IMPLIED WARRANTIES OF MERCHANTABILITY AND FITNESS FOR A PARTICULAR PURPOSE ARE DISCLAIMED. IN NO EVENT SHALL INTEL OR CONTRIBUTORS BE LIABLE FOR ANY DIRECT, INDIRECT, INCIDENTAL, SPECIAL, EXEMPLARY, OR CONSEQUENTIAL DAMAGES (INCLUDING, BUT NOT LIMITED TO, PROCUREMENT OF SUBSTITUTE GOODS OR SERVICES; LOSS OF USE, DATA, OR PROFITS; OR BUSINESS INTERRUPTION) HOWEVER CAUSED AND ON ANY THEORY OF LIABILITY, WHETHER IN CONTRACT, STRICT LIABILITY, OR TORT (INCLUDING NEGLIGENCE OR OTHERWISE) ARISING IN ANY WAY OUT OF THE USE OF THIS SOFTWARE, EVEN IF ADVISED OF THE POSSIBILITY OF SUCH DAMAGE.

The files inet/getnameinfo.c and sysdeps/posix/getaddrinfo.c are copyright © by Craig Metz and are distributed under the following license:

The Inner Net License, Version 2.00

The author(s) grant permission for redistribution and use in source and binary forms, with or without modification, of the software and documentation provided that the following conditions are met:

0. If you receive a version of the software that is specifically labelled as not being for redistribution (check the version message and/or README), you are not permitted to redistribute that version of the software in any way or form.
1. All terms of the all other applicable copyrights and licenses must be followed.
2. Redistributions of source code must retain the authors’ copyright notice(s), this list of conditions, and the following disclaimer.
3. Redistributions in binary form must reproduce the authors’ copyright notice(s), this list of conditions, and the following disclaimer in the documentation and/or other materials provided with the distribution.
4. [The copyright holder has authorized the removal of this clause.]
5. Neither the name(s) of the author(s) nor the names of its contributors may be used to endorse or promote products derived from this software without specific prior written permission.

THIS SOFTWARE IS PROVIDED BY ITS AUTHORS AND CONTRIBUTORS “AS IS” AND ANY EXPRESS OR IMPLIED WARRANTIES, INCLUDING, BUT NOT LIMITED TO, THE IMPLIED WARRANTIES OF MERCHANTABILITY AND FITNESS FOR A PARTICULAR PURPOSE ARE DISCLAIMED. IN NO EVENT SHALL THE AUTHORS OR CONTRIBUTORS BE LIABLE FOR ANY DIRECT, INDIRECT, INCIDENTAL, SPECIAL, EXEMPLARY, OR CONSEQUENTIAL DAMAGES (INCLUDING, BUT NOT LIMITED TO, PROCUREMENT OF SUBSTITUTE GOODS OR SERVICES; LOSS OF USE, DATA, OR PROFITS; OR BUSINESS INTERRUPTION) HOWEVER CAUSED AND ON ANY THEORY OF LIABILITY, WHETHER IN CONTRACT, STRICT LIABILITY, OR TORT (INCLUDING NEGLIGENCE OR OTHERWISE) ARISING IN ANY WAY OUT OF THE USE OF THIS SOFTWARE, EVEN IF ADVISED OF THE POSSIBILITY OF SUCH DAMAGE.

If these license terms cause you a real problem, contact the author.

libcap

Unless otherwise *explicitly* stated, the following text describes the licensed conditions under which the contents of this libcap release may be used and distributed:

Redistribution and use in source and binary forms of libcap, with or without modification, are permitted provided that the following conditions are met:

1. Redistributions of source code must retain any existing copyright notice, and this entire permission notice in its entirety, including the disclaimer of warranties.
2. Redistributions in binary form must reproduce all prior and current copyright notices, this list of conditions, and the following disclaimer in the documentation and/or other materials provided with the distribution.
3. The name of any author may not be used to endorse or promote products derived from this software without their specific prior written permission.

ALTERNATIVELY, this product may be distributed under the terms of the GNU General Public License, in which case the provisions of the GNU GPL are required INSTEAD OF the above restrictions. (This clause is necessary due to a potential conflict between the GNU GPL and the restrictions contained in a BSD-style copyright.)

THIS SOFTWARE IS PROVIDED “AS IS” AND ANY EXPRESS OR IMPLIED WARRANTIES, INCLUDING, BUT NOT LIMITED TO, THE IMPLIED WARRANTIES OF MERCHANTABILITY AND FITNESS FOR A PARTICULAR PURPOSE ARE DISCLAIMED.
IN NO EVENT SHALL THE AUTHOR(S) BE LIABLE FOR ANY DIRECT, INDIRECT, INCIDENTAL, SPECIAL, EXEMPLARY, OR CONSEQUENTIAL DAMAGES (INCLUDING, BUT NOT LIMITED TO, PROCUREMENT OF SUBSTITUTE GOODS OR SERVICES; LOSS OF USE, DATA, OR PROFITS; OR BUSINESS INTERRUPTION) HOWEVER CAUSED AND ON ANY THEORY OF LIABILITY, WHETHER IN CONTRACT, STRICT LIABILITY, OR TORT (INCLUDING NEGLIGENCE OR OTHERWISE) ARISING IN ANY WAY OUT OF

THE USE OF THIS SOFTWARE, EVEN IF ADVISED OF THE POSSIBILITY OF SUCH DAMAGE.

libjpeg

The authors make NO WARRANTY or representation, either express or implied, with respect to this software, its quality, accuracy, merchantability, or fitness for a particular purpose. This software is provided "AS IS", and you, its user, assume the entire risk as to its quality and accuracy.

This software is copyright © 1991-1998, Thomas G. Lane.
All Rights Reserved except as specified below.

Permission is hereby granted to use, copy, modify, and distribute this software (or portions thereof) for any purpose, without fee, subject to these conditions:

(1) If any part of the source code for this software is distributed, then this README file must be included, with this copyright and no-warranty notice unaltered; and any additions, deletions, or changes to the original files must be clearly indicated in accompanying documentation.

(2) If only executable code is distributed, then the accompanying documentation must state that "this software is based in part on the work of the Independent JPEG Group".

(3) Permission for use of this software is granted only if the user accepts full responsibility for any undesirable consequences; the authors accept NO LIABILITY for damages of any kind.

These conditions apply to any software derived from or based on the IJG code, not just to the unmodified library. If you use our work, you ought to acknowledge us.

Permission is NOT granted for the use of any IJG author's name or company name in advertising or publicity relating to this software or products derived from it. This software may be referred to only as "the Independent JPEG Group's software".

We specifically permit and encourage the use of this software as the basis of commercial products, provided that all warranty or liability claims are assumed by the product vendor.

ansi2knr.c is included in this distribution by permission of L. Peter Deutsch, sole proprietor of its copyright holder, Aladdin Enterprises of Menlo Park, CA. ansi2knr.c is NOT covered by the above copyright and conditions, but instead by the usual distribution terms of the Free Software Foundation; principally, that you must include source code if you redistribute it. (See the file ansi2knr.c for full details.) However, since ansi2knr.c is not needed as part of any program generated from the IJG code, this does not limit you more than the foregoing paragraphs do.

The Unix configuration script "configure" was produced with GNU Autoconf. It is copyright by the Free Software Foundation but is freely distributable. The same holds for its supporting scripts (config.guess, config.sub, ltconfig, ltmain.sh). Another support script, install-sh, is copyright by M.I.T. but is also freely distributable.

It appears that the arithmetic coding option of the JPEG spec is covered by patents owned by IBM, AT&T, and Mitsubishi. Hence arithmetic coding cannot legally be used without obtaining one or more licenses. For this reason, support for arithmetic coding has been removed from the free JPEG software. (Since arithmetic coding provides only a marginal gain over the unpatented Huffman mode, it is unlikely that very many implementations will support it.) So far as we are aware, there are no patent restrictions on the remaining code.

The IJG distribution formerly included code to read and write GIF files. To avoid entanglement with the Unisys LZW patent, GIF reading support has been removed altogether, and the GIF writer has been simplified to produce "uncompressed GIFs". This technique does not use the LZW algorithm; the resulting GIF files are larger than usual, but are readable by all standard GIF decoders.

We are required to state that
"The Graphics Interchange Format © is the Copyright property of CompuServe Incorporated. GIF(sm) is a Service Mark property of CompuServe Incorporated."

libmng

COPYRIGHT NOTICE:

Copyright © 2000 Gerard Juyn (gerard@libmng.com)
[You may insert additional notices after this sentence if you modify this source]

For the purposes of this copyright and license, "Contributing Authors" is defined as the following set of individuals:
Gerard Juyn

The MNG Library is supplied "AS IS". The Contributing Authors disclaim all warranties, expressed or implied, including, without limitation, the warranties of merchantability and of fitness for any purpose. The Contributing Authors assume no liability for direct, indirect, incidental, special, exemplary, or consequential damages, which may result from the use of the MNG Library, even if advised of the possibility of such damage.

Permission is hereby granted to use, copy, modify, and distribute this source code, or portions hereof, for any purpose, without fee, subject to the following restrictions:

1. The origin of this source code must not be misrepresented; you must not claim that you wrote the original software.
2. Altered versions must be plainly marked as such and must not be misrepresented as being the original source.
3. This Copyright notice may not be removed or altered from any source or altered source distribution.

The Contributing Authors specifically permit, without fee, and encourage the use of this source code as a component to supporting the MNG and JNG file format in commercial products. If you use this source code in a product, acknowledgment would be highly appreciated.

Parts of this software have been adapted from the libpng package. Although this library supports all features from the PNG specification (as MNG descends from it) it does not require the libpng package. It does require the zlib library and optionally the IJG jpeg library, and/or the "little-cms" library by Marti Maria (depending on the inclusion of support for JNG and Full-Color-Management respectively.

This library's function is primarily to read and display MNG animations. It is not meant as a full-featured image-editing component! It does however offer creation and editing functionality at the chunk level.
(future modifications may include some more support for creation and or editing)

libncurses

Copyright © 1998-2003, 2004 Free Software Foundation, Inc.

Permission is hereby granted, free of charge, to any person obtaining a copy of this software and associated documentation files (the "Software"), to deal in the Software without restriction, including without limitation the rights to use, copy, modify, merge, publish, distribute, distribute with modifications, sublicense, and/or sell copies of the Software, and to permit persons to whom the Software is furnished to do so, subject to the following conditions:

The above copyright notice and this permission notice shall be included in all copies or substantial portions of the Software.

THE SOFTWARE IS PROVIDED "AS IS", WITHOUT WARRANTY OF ANY KIND, EXPRESS OR IMPLIED, INCLUDING BUT NOT LIMITED TO THE WARRANTIES OF MERCHANTABILITY, FITNESS FOR A PARTICULAR PURPOSE AND NONINFRINGEMENT.
IN NO EVENT SHALL THE ABOVE COPYRIGHT HOLDERS BE LIABLE FOR ANY CLAIM, DAMAGES OR OTHER LIABILITY, WHETHER IN AN ACTION OF CONTRACT, TORT OR OTHERWISE, ARISING FROM, OUT OF OR IN CONNECTION WITH THE SOFTWARE OR THE USE OR OTHER DEALINGS IN THE SOFTWARE.

Except as contained in this notice, the name(s) of the above copyright holders shall not be used in advertising or otherwise to promote the sale, use or other dealings in this Software without prior written authorization.

libpng

This copy of the libpng notices is provided for your convenience. In case of any discrepancy between this copy and the notices in the file png.h that is included in the libpng distribution, the latter shall prevail.

COPYRIGHT NOTICE, DISCLAIMER, and LICENSE:

If you modify libpng you may insert additional notices immediately following this sentence.

libpng version 1.2.6, August 15, 2004, is
Copyright © 2004 Glenn Randers-Pehrson, and is distributed according to the same disclaimer and license as libpng-1.2.5 with the following individual added to the list of Contributing Authors
Cosmin Truta

libpng versions 1.0.7, July 1, 2000, through 1.2.5 - October 3, 2002, are Copyright © 2000-2002 Glenn Randers-Pehrson, and are distributed according to the same disclaimer and license as libpng-1.0.6 with the following individuals added to the list of Contributing Authors
Simon-Pierre Cadieux
Eric S. Raymond
Gilles Vollant

and with the following additions to the disclaimer:

There is no warranty against interference with your enjoyment of the library or against infringement. There is no warranty that our efforts or the library will fulfill any of your particular purposes or needs. This library is provided with all faults, and the entire risk of satisfactory quality, performance, accuracy, and effort is with the user.

libpng versions 0.97, January 1998, through 1.0.6, March 20, 2000, are

Copyright © 1998, 1999 Glenn Randers-Pehrson, and are distributed according to the same disclaimer and license as libpng-0.96, with the following individuals added to the list of Contributing Authors:
Tom Lane
Glenn Randers-Pehrson
Willem van Schaik

libpng versions 0.89, June 1996, through 0.96, May 1997, are
Copyright © 1996, 1997 Andreas Dilger
Distributed according to the same disclaimer and license as libpng-0.88, with the following individuals added to the list of Contributing Authors:
John Bowler
Kevin Bracey
Sam Bushell
Magnus Holmgren
Greg Roelofs
Tom Tanner

libpng versions 0.5, May 1995, through 0.88, January 1996, are
Copyright © 1995, 1996 Guy Eric Schalnat, Group 42, Inc.

For the purposes of this copyright and license, "Contributing Authors" is defined as the following set of individuals:
Andreas Dilger
Dave Martindale
Guy Eric Schalnat
Paul Schmidt
Tim Wegner

The PNG Reference Library is supplied "AS IS". The Contributing Authors and Group 42, Inc. disclaim all warranties, expressed or implied, including, without limitation, the warranties of merchantability and of fitness for any purpose. The Contributing Authors and Group 42, Inc. assume no liability for direct, indirect, incidental, special, exemplary, or consequential damages, which may result from the use of the PNG Reference Library, even if advised of the possibility of such damage.

Permission is hereby granted to use, copy, modify, and distribute this source code, or portions hereof, for any purpose, without fee, subject to the following restrictions:

1. The origin of this source code must not be misrepresented.
2. Altered versions must be plainly marked as such and must not be misrepresented as being the original source.
3. This Copyright notice may not be removed or altered from any source or altered source distribution.

The Contributing Authors and Group 42, Inc. specifically permit, without fee, and encourage the use of this source code as a component to supporting the PNG file format in commercial products. If you use this source code in a product, acknowledgment is not required but would be appreciated.

A "png_get_copyright" function is available, for convenient use in "about" boxes and the like:

printf("%s",png_get_copyright(NULL));

Also, the PNG logo (in PNG format, of course) is supplied in the files "pngbar.png" and "pngbar.jpg" (88x31) and "pngnow.png" (98x31).

libpng is OSI Certified Open Source Software. OSI Certified Open Source is a certification mark of the Open Source Initiative.

Glenn Randers-Pehrson
glennrp@users.sourceforge.net
August 15, 2004

libxml

Except where otherwise noted in the source code (e.g. the files hash.c, list.c and the trio files, which are covered by a similar licence but with different Copyright notices) all the files are:

Copyright © 1998-2003 Daniel Veillard. All Rights Reserved.

Permission is hereby granted, free of charge, to any person obtaining a copy of this software and associated documentation files (the "Software"), to deal in the Software without restriction, including without limitation the rights to use, copy, modify, merge, publish, distribute, sublicense, and/or sell copies of the Software, and to permit persons to whom the Software is furnished to do so, subject to the following conditions:

The above copyright notice and this permission notice shall be included in all copies or substantial portions of the Software.

THE SOFTWARE IS PROVIDED "AS IS", WITHOUT WARRANTY OF ANY KIND, EXPRESS OR IMPLIED, INCLUDING BUT NOT LIMITED TO THE WARRANTIES OF MERCHANTABILITY, FITNESS FOR A PARTICULAR PURPOSE AND NONINFRINGEMENT. IN NO EVENT SHALL THE DANIEL VEILLARD BE LIABLE FOR ANY CLAIM, DAMAGES OR OTHER LIABILITY, WHETHER IN AN ACTION OF CONTRACT, TORT OR OTHERWISE, ARISING FROM, OUT OF OR IN CONNECTION WITH THE SOFTWARE OR THE USE OR OTHER DEALINGS IN THE SOFTWARE.

Except as contained in this notice, the name of Daniel Veillard shall not be used in advertising or otherwise to promote the sale, use or other dealings in this Software without prior written authorization from him.

Copyright © 1998 Bjorn Reese and Daniel Stenberg.
Copyright © 2000 Bjorn Reese and Daniel Veillard.
Copyright © 2000 Bjorn Reese and Daniel Stenberg.
Copyright © 2000 Gary Pennington and Daniel Veillard.
Copyright © 2001 Bjorn Reese and Daniel Stenberg.

Permission to use, copy, modify, and distribute this software for any purpose with or without fee is hereby granted, provided that the above copyright notice and this permission notice appear in all copies.

THIS SOFTWARE IS PROVIDED "AS IS" AND WITHOUT ANY EXPRESS OR IMPLIED WARRANTIES, INCLUDING, WITHOUT LIMITATION, THE IMPLIED WARRANTIES OF MERCHANTIBILITY AND FITNESS FOR A PARTICULAR PURPOSE. THE AUTHORS AND CONTRIBUTORS ACCEPT NO RESPONSIBILITY IN ANY CONCEIVABLE MANNER.

pam

Unless otherwise *explicitly* stated the following text describes the licensed conditions under which the contents of this Linux-PAM release may be distributed:

Redistribution and use in source and binary forms of Linux-PAM, with or without modification, are permitted provided that the following conditions are met:

1. Redistributions of source code must retain any existing copyright notice, and this entire permission notice in its entirety, including the disclaimer of warranties.
2. Redistributions in binary form must reproduce all prior and current copyright notices, this list of conditions, and the following disclaimer in the documentation and/or other materials provided with the distribution.
3. The name of any author may not be used to endorse or promote products derived from this software without their specific prior written permission.

ALTERNATIVELY, this product may be distributed under the terms of the GNU General Public License, in which case the provisions of the GNU GPL are required INSTEAD OF the above restrictions. (This clause is necessary due to a potential conflict between the GNU GPL and the restrictions contained in a BSD-style copyright.)

THIS SOFTWARE IS PROVIDED "AS IS" AND ANY EXPRESS OR IMPLIED WARRANTIES, INCLUDING, BUT NOT LIMITED TO, THE IMPLIED WARRANTIES OF MERCHANTABILITY AND FITNESS FOR A PARTICULAR PURPOSE ARE DISCLAIMED.IN NO EVENT SHALL THE AUTHOR(S) BE LIABLE FOR ANY DIRECT, INDIRECT, INCIDENTAL, SPECIAL, EXEMPLARY, OR CONSEQUENTIAL DAMAGES (INCLUDING, BUT NOT LIMITED TO, PROCUREMENT OF SUBSTITUTE GOODS OR SERVICES; LOSS OF USE, DATA, OR PROFITS; OR BUSINESS INTERRUPTION) HOWEVER CAUSED AND ON ANY THEORY OF LIABILITY, WHETHER IN CONTRACT, STRICT LIABILITY, OR TORT (INCLUDING NEGLIGENCE OR OTHERWISE) ARISING IN ANY WAY OUT OF THE USE OF THIS SOFTWARE, EVEN IF ADVISED OF THE POSSIBILITY OF SUCH DAMAGE.

zlib

Copyright notice:
© 1995-2003 Jean-loup Gailly and Mark Adler

This software is provided 'as-is', without any express or implied warranty. In no event will the authors be held liable for any damages arising from the use of this software.

Permission is granted to anyone to use this software for any purpose, including commercial applications, and to alter it and redistribute it freely, subject to the following restrictions:

1. The origin of this software must not be misrepresented; you must not claim that you wrote the original software. If you use this software in a product, an acknowledgment in the product documentation would be appreciated but is not required.
2. Altered source versions must be plainly marked as such, and must not be misrepresented as being the original software.
3. This notice may not be removed or altered from any source distribution.

Jean-loup Gailly	Mark Adler
jloup@gzip.org	madler@alumni.caltech.edu

If you use the zlib library in a product, we would appreciate *not* receiving lengthy legal documents to sign. The sources are provided for free but without warranty of any kind. The library has been entirely written by Jean-loup Gailly and Mark Adler; it does not include third-party code.

If you redistribute modified sources, we would appreciate that you include in the file ChangeLog history information documenting your changes. Please read the FAQ for more information on the distribution of modified source versions.

Note on source code distribution

For three years after the final factory shipment, you may request from Yamaha the source code for any portions of the product which are licensed under the GNU General Public License or GNU Lesser General Public License by writing to the following address:

DE Group Marketing Department Digital Musical Instruments Division,
YAMAHA Corporation
10-1 Nakazawa-cho, Naka-ku, Hamamatsu, 430-8650, JAPAN

The source code will be provided at no charge; however, we may require you to reimburse Yamaha for the cost of delivering the source code to you.

- Note that we shall bear no responsibility whatsoever for any damage arising from changes (additions/ deletions) made to the software for this product by a third party other than Yamaha (or party authorized by Yamaha).
- Note that re-use of source code released to the public domain by Yamaha is unguaranteed, and Yamaha shall not bear any responsibility whatsoever for the source code.
- The source code can be downloaded from the following address:
http://www.yamahasynth.com/download/source/motifxf

Yamaha Web Site (English)
http://www.yamahasynth.com/

Yamaha Downloads
http://download.yamaha.com/

C.S.G., DMI Development Division
© 2010 – 2014 Yamaha Corporation
402MW-C0